T. PHILLIPS.

HYDRANT AND PLUG-VALVES.

No. 194,973. Patented Sept. 11, 1877.

Fig 1.

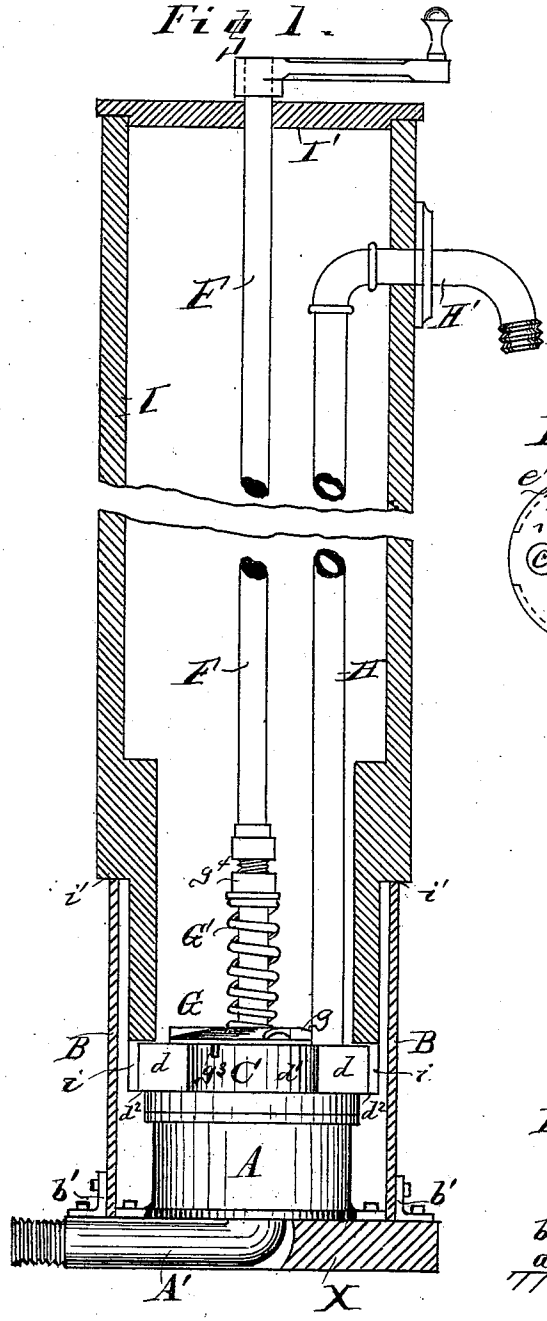

Fig 3.

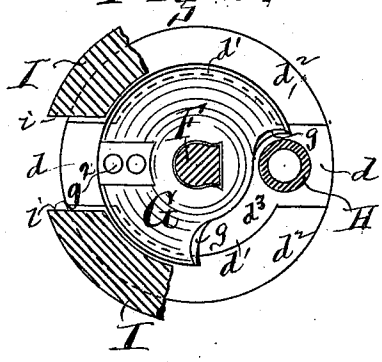

Fig 4.

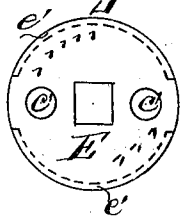

Fig 2.

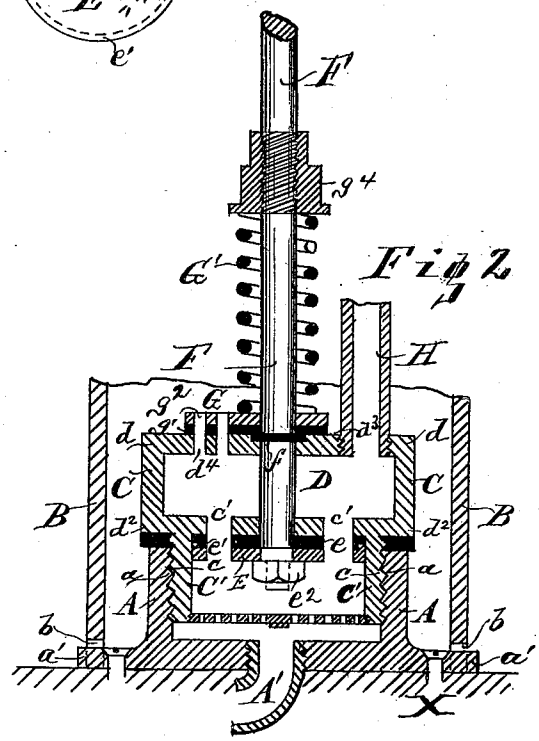

Witnesses,
J. W. Herthel.
Chas. Herthel.

Inventor,
Thomas Phillips
per Herthel & Co
Attys.

N. PETERS, PHOTO-LITHOGRAPHER, WASHINGTON, D. C.

UNITED STATES PATENT OFFICE.

THOMAS PHILLIPS, OF ST. LOUIS, MISSOURI, ASSIGNOR OF ONE-HALF HIS RIGHT TO EDWARD HUDSPITH.

IMPROVEMENT IN HYDRANT AND PLUG VALVES.

Specification forming part of Letters Patent No. **194,973**, dated September 11, 1877; application filed February 21, 1877.

To all whom it may concern:

Be it known that I, THOMAS PHILLIPS, of St. Louis, in the county of St. Louis and State of Missouri, have invented an Improved Hydrant and Plug Valve, of which the following is a specification:

This invention is an improved hydrant-valve; also serviceable as a plug-valve.

The novel features constituting my improvements are as will hereinafter appear, and be pointed out in the claims.

Of the drawings, Figure 1 is a sectional elevation of the boxing and side elevation of the valve parts inside said boxing. Fig. 2 is an enlarged sectional elevation to show construction of lower boxing and contained valve parts that are hidden in the ground. Fig. 3 is a top plan, showing upper valve which controls the waste, and the peculiar construction of the cap or cover is also indicated. Fig. 4 is a face view of the lower valve.

A is the shell or lower chamber, in which the water first collects before it is discharged. A′ is the inlet-pipe connecting to the lower part of A. (See Figs. 1 and 2.) The shell A, further, has the female screw-thread at *a*, (see Fig. 2,) for the purpose of receiving the threads of the cap or cover.

In order to secure the lower chamber A, I cast the same so as to have on its lower face lugs *a′*, (see Fig. 2,) which branch from its sides, and can be secured to a suitable foundation, X.

To protect and also additionally secure the shell A, I surround it either with a wood or iron casing, B. This is made to have openings *b* in line with the lugs *a′*. (See Fig. 2.) Said casing B is united to X by angle-irons *b′*. (See Fig. 1.) The casing B can be made to cover the hydrant post or boxing, the object in using said casing being to protect the boxing from rotting, and also protect the parts of the hydrant that remain in the ground.

The parts above described, according to the nature of my invention, are those that permanently remain in the ground—that is, they are not dug out for the purpose of repairing, removing, or replacing the operating parts; and by the latter term I mean all the parts embraced in the description now following.

C is the cap or cover. (See Figs. 1 and 2.) The lower part, C′, of the cap has the male threads at *c* to engage the female threads *a* of the shell, (see Fig. 2,) and it is this screw feature, operated from without or from the top by means of the hydrant boxing or post, that enables me to remove or replace, as the case may require, the upper sectional parts (viz., carried by the cap C) from the lower sectional parts that, as stated, remain in the ground.

The under face of the cap C is the valve-seat. It has one or more water-passages, *c′*, communicating from the lower water-chamber to the interior of the cap, which constitutes the upper or discharge chamber D. (See Fig. 2.) The top of the cap (or outside of the discharge-chamber D) in construction is made to have the opposite lugs *d* and the curved body part d^1, and, lastly, the shoulder at d^2. (See Figs. 1, 2, 3.)

The lugs *d* serve as a bearing or hold-fast for the boxing to engage, so that by means of the latter the turning movement can be made to screw or unscrew the sectional parts. Also, said lugs *d* serve to limit the turning movement of the crank-rod.

The top face d^3 of the body part d^1 is a valve-seat. The sides of said body part serve also as a guide for the operation of the valve top of the seat d^3. At d^4 one or more waste-passages are made. (See Fig. 2.)

E is the lower valve that controls the passages *c′*—*i. e.*, to open or shut the hydrant or plug-valve. Said valve is a circular plate, corresponding to the seat, and has water-passages *c′* in line with those of the cap. *e* is the valve-packing. It is retained by projecting points and bearing-edges e^1 formed on the face of said valve. (See Figs. 2, 4.)

The valve E with packing is secured to the lower end of the rod F. The latter, for this purpose, has its end made square-shaped, like the opening made in the valve, (see Fig. 4,) and the joint made secure by a nut, e^2. (See Fig. 2.)

The rod F also carries the upper valve G that controls the waste. The valve G I make of the constructive shape shown in Fig. 3—that is, with a part of its circle left away to form the two edges at *g*. (See Figs. 1, 3.) The part so left away is in accordance with the part rotary movement the operating parts perform. The edges *g* will then abut against the discharge-pipe, this latter serving to estop the operating parts, to indicate the full opening and closing of the hydrant or valve.

g^1 is the valve-packing, shaped like the valve, and properly secured thereto. Further, the valve G has one or more passages, g^2, (see Figs. 2, 3,) in line with the waste d^4, before mentioned, and so that when both passages d^4 and g^2 are in line the waste is open; otherwise to be shut.

g^3 are pins projecting from the valve G, and engaging the sides of the body part d^1, (see Fig. 1,) and serve to guide the valve in its operation.

To secure the valve G with its packing on the rod F, this latter is made U-shaped, (see Fig. 3,) fitted to pass through the like opening shaped in the valve. By this joint the turning movement of the rod carries said valve with it.

At *f* is a packing contained in an annular recess, (see Fig. 2,) rendering the joint at that place water-tight.

G′ is a spring round the rod. The lower end of the spring is held against the top of the valve G, while the upper end of the spring is secured by a nut, g^4. (See Figs. 1, 2.) The spring G′ serves to hold the lower valve up to its seat, and the upper valve down to its seat.

H is the discharge-pipe, joined in communication with one end of the discharge-chamber D. (See Figs. 1 and 2.) The nozzle H′ of the pipe H can be screwed on or off.

I is the part or boxing which is inserted down on the cap C. The lower edge of the boxing I has mortised openings *i*, (see Figs. 1 and 3,) which are in line with the lugs *d* of the cap, and so that said boxing can hold fast to said lugs, and so that by turning the said boxing to the right or left the operating parts carried by the cap C can be united or disengaged from the parts that remain hidden in the ground. The lower edge of the boxing I rests upon the shoulder d^2 of the cap. At *i′* the boxing I has an offset, so that it can rest on top of the casing B. (See Fig. 1.) I′ is the top for the boxing. The rod F passes through said top, and is turned from without by a hand-crank.

The parts being thus constructed and arranged, their operation is as follows: Turn the rod F until it is estopped. The hydrant or valve, we will say, is then open. This open condition consists in the lower valve E having its openings brought in line with those that communicate with the discharge-chamber D. The discharge of water will then take place from D out of H. The hydrant is open, therefore, when waste is closed, and, vice versa, the waste is open when hydrant is shut off.

By reversing the operating-rod F the upper valve has its openings brought in line with the waste, while the lower valve is made to close the communication of water to the discharge-chamber D. The waste then freely escapes, and that out of the discharge-pipe, and therefore I gain the great advantage of an anti-freezing hydrant or plug valve.

I have shown one or more waste-openings; also, one or more water-passages leading to the discharge-chamber; the object being to provide adequate means to obtain a complete discharge of the waste and a full pressure discharge.

The arrangement of the operating parts here shown is such as to be protected in the greatest measure from the action of the water and water-pressure.

The lower valve is always retained to its seat, the pressure from below insuring this end also, while the spring sufficiently retains the upper valve down on its seat.

In case of repairs being necessary, turn the boxing I so as to unscrew the sections, and the cap with all the operating parts—viz., lower valve, lower casing, packing, the rod, upper valve, its packing, the discharge-pipe and boxing—can all be lifted out of the ground without digging. Thus all essential parts liable to require repairs can be disconnected and removed and replaced—a feature which, to the full extent, as here shown, has not heretofore been achieved.

What I claim is—

1. The valve E, having bearing edges and points e^1 to secure its packing.

2. The valve E, having water-passages *c′*, the packing *e*, the rod F, the cap or cover C, having the upper water-chamber D and lower part C′, the shell A, having inlet A′, all said parts being combined and operating to control the inlet of water to said chamber D, as and for the purpose set forth.

3. The cap or cover C, having screw-threads at *c*, water-passages d^4 *c′*, shoulder d^2, body part at d^1, lugs *d*, and discharge-chamber D, as and for the purpose set forth.

4. The valve G, having edges *g*, as and for the purpose set forth.

5. The combination of the valve G, having edges *g*, passages g^2, pins g^3, the valve-packing g^1, the cap C, having waste d^4, body part d^1, discharge-chamber D, the rod F, and discharge-pipe H, said parts operating in the manner and for the purpose set forth.

6. The spring G′, nut g^4, in combination with valves G and E on the rod F, as and for the purpose set forth.

7. The boxing I, having mortises *i*, in combination with the lugs *d* of a cap or cover, C, as and for the purpose set forth.

8. The boxing I, having mortises *i*, the cap C, having lugs *d* and threads *c*, in combination with the shell A, as and for the purpose set forth.

9. The boxing I, its mortises *i*, the cap C, having chamber D, thread *c*, the upper valve G, discharge-pipe H, the lower valve E, and the operating-rod F, all said parts being combined to operate in the manner and for the purpose set forth.

In testimony of said invention I have hereunto set my hand.

THOMAS PHILLIPS.

Witnesses:

DAVID J. BEATTIE,

WILLIAM W. HERTHEL.