(12) INTERNATIONAL APPLICATION PUBLISHED UNDER THE PATENT COOPERATION TREATY (PCT)

(19) World Intellectual Property Organization
International Bureau

(43) International Publication Date
19 May 2016 (19.05.2016)

WIPO | PCT

(10) International Publication Number
WO 2016/076958 A1

(51) International Patent Classification:
C07C 17/00 (2006.01) *C07C 21/06* (2006.01)
C07C 17/10 (2006.01)

(21) International Application Number:
PCT/US2015/053158

(22) International Filing Date:
30 September 2015 (30.09.2015)

(25) Filing Language: English

(26) Publication Language: English

(30) Priority Data:
62/078,018 11 November 2014 (11.11.2014) US

(71) Applicant: **BLUE CUBE IP LLC** [US/US]; 2030 Dow Center, Midland, MI 48674 (US).

(72) Inventors: **FISH, Barry B.**; 2301 N. Brazosport Blvd., Freeport, TX 77541 (US). **PRETZ, Matthew T.**; 2301 N. Brazosport Blvd. B251, Freeport, TX 77541 (US). **TIRTOWIDJOJO, Max M.**; 2301 N. Brazosport Blvd, Freeport, TX 77541 (US).

(74) Agent: **DOTY, Kathryn J. ,**; POLSINELLI PC, 105 West Vandalia Street, Suite 400, Edwardsville, Illinois 62025 (US).

(81) Designated States *(unless otherwise indicated, for every kind of national protection available)*: AE, AG, AL, AM, AO, AT, AU, AZ, BA, BB, BG, BH, BN, BR, BW, BY, BZ, CA, CH, CL, CN, CO, CR, CU, CZ, DE, DK, DM, DO, DZ, EC, EE, EG, ES, FI, GB, GD, GE, GH, GM, GT, HN, HR, HU, ID, IL, IN, IR, IS, JP, KE, KG, KN, KP, KR, KZ, LA, LC, LK, LR, LS, LU, LY, MA, MD, ME, MG, MK, MN, MW, MX, MY, MZ, NA, NG, NI, NO, NZ, OM, PA, PE, PG, PH, PL, PT, QA, RO, RS, RU, RW, SA, SC, SD, SE, SG, SK, SL, SM, ST, SV, SY, TH, TJ, TM, TN, TR, TT, TZ, UA, UG, US, UZ, VC, VN, ZA, ZM, ZW.

(84) Designated States *(unless otherwise indicated, for every kind of regional protection available)*: ARIPO (BW, GH, GM, KE, LR, LS, MW, MZ, NA, RW, SD, SL, ST, SZ, TZ, UG, ZM, ZW), Eurasian (AM, AZ, BY, KG, KZ, RU, TJ, TM), European (AL, AT, BE, BG, CH, CY, CZ, DE, DK, EE, ES, FI, FR, GB, GR, HR, HU, IE, IS, IT, LT, LU, LV, MC, MK, MT, NL, NO, PL, PT, RO, RS, SE, SI, SK, SM, TR), OAPI (BF, BJ, CF, CG, CI, CM, GA, GN, GQ, GW, KM, ML, MR, NE, SN, TD, TG).

Published:

— *with international search report (Art. 21(3))*

(54) Title: PROCESS FOR THE PRODUCTION OF VINYL CHLORIDE, HEAVIES, AND HYDROGEN CHLORIDE FROM ETHANE

Figure 1.

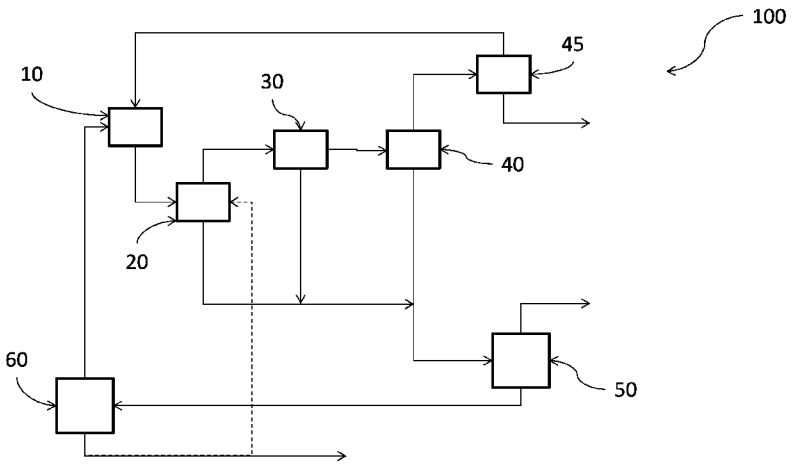

(57) Abstract: A process is provided for the chlorination of ethane using chlorine as the chlorinating agent to produce hydrogen chloride (HCl) and vinyl chloride (VCM) and heavies.

WO 2016/076958 A1

PROCESS FOR THE PRODUCTION OF VINYL CHLORIDE, HEAVIES, AND HYDROGEN CHLORIDE FROM ETHANE

The present invention relates to a method of producing hydrogen chloride (HCl), vinyl chloride (VCM) and heavies by chlorinating ethane using chlorine (Cl_2) as the chlorinating agent. The invention further relates to the recycle to extinction of ethylene and ethyl chloride.

The foregoing products have traditionally been prepared from more expensive sources of hydrocarbons. Dating back to the early part of this century, the large scale production of vinyl chloride, trichloroethylene and perchloroethylene commenced with the use of acetylene however acetylene is a relatively expensive raw material. When the ethylene oxychlorination process was developed during the 1950's, acetylene was supplanted by less costly ethylene as a feedstock for chlorinated hydrocarbons. Up to the present time practically all chlorinated ethane/ethylene products have been derived from ethylene.

Although ethylene is produced in large quantities by world-scale plants, its cost is necessarily higher than the price of ethane from which it is preferentially made. Contributing to ethylene's cost is the necessity of employing complex, high-temperature cracking processes with inherent inefficiencies. Therefore, there would be a significant advantage of substituting ethane for ethylene in the manufacture of chlorinated ethane/ethylene. Particularly in the case of the manufacture of vinyl chloride, which requires about 0.45 pounds of ethylene per pound of product, any savings in the cost of hydrocarbon raw material would be important.

In order to circumvent the shortcomings of existing technology, numerous attempts have been made to chlorinate ethane by cost-effective means. One such method, for example, that employs various chlorinating agents including C_2Cl_6 combined with hydrogen chloride and chlorine is described in U.S. Pat. No. 5,097,083. While U.S. Pat. No. 5,097,083 demonstrated the use of C_2Cl_6 as a chlorinating agent, in some cases C_2Cl_6 may be unfavorable because additional operating and capital costs are needed to produce the chlorinating agent C_2Cl_6. For example, an oxychlorination reactor was proposed to chlorinate the C_2Cl_4 precursor for C_2Cl_6 and additional separation columns were needed to purify and recycle C_2Cl_4 and HCl. Another method, disclosed in U.S. Pat. No. 2,628,259 teaches chlorination of ethane to co-produce VCM and vinylidene chloride (1,1-dichloroethylene) uses high chlorine to ethane molar ratio that makes low selectivity to the desired products VCM and ethylene. In contrast, CA2097434

teaches a process of high selectivity to ethylene by chlorination of ethane but at a lower than 1.1 molar ratio of chlorine to ethane that makes the process yield lower than 50% to the desired product.

It is therefore an object of the present invention to provide a method for the chlorination of ethane that overcomes the disadvantages of the conventional methods.

The present invention provides a continuous process for producing hydrogen chloride, heavies, and vinyl chloride comprising

a) reacting a feed comprising chlorine and ethane in a reaction zone to produce a crude product wherein the crude product comprises
   i. an extinction recycle fraction comprising ethylene and ethyl chloride, and
   ii. product components comprising hydrogen chloride, heavies, and vinyl chloride, and further wherein the heavies comprise 1,2-dichloroethane and 1,1-dichloroethane; and
b) fractionally separating the extinction recycle fraction from the crude product.

As used herein "adiabatic" means: the chlorination process or reaction occurs without transfer of heat between the reactor and its surroundings. The process is said to be nearly adiabatic because the reactor is insulated or designed in such a manner that heat is not intentionally added or removed from the reactor.

As used herein "exit temperature" means: the temperature of reactor effluent. The chlorine to ethane feed ratio is one of the variables used to control the exit temperature. This chlorine:ethane molar ratio ranges from 1.1 to 3.0, alternatively from 1.5 to 2.5 . The exit temperature ranges from 350 – 700 °C, alternatively from 375 – 675 °C, further alternatively from 400 – 650 °C.

As used herein "extinction recycle fraction" means: ethyl chloride and ethylene.

As used herein "heavies" means primarily: 1,2-dichloroethane (EDC), 1,1-dichloroethane (ADI), 1,1,1-trichloroethane , 1,1,2-trichloroethane (BTRI), 1,1-dichloroethylene. Heavies are products of the present invention.

As used herein "inlet temperature" means: the mixed temperature of the entire feed components stream as they entered the reactor wherein the feed components comprise ethane and chlorine. The inlet temperature ranges from 200°C to 350°C, alternatively from 250 – 330 °C, further alternatively from 260 – 320 °C.

As used herein "product components" means: heavies, HCl, and VCM.

As used herein "recycle to extinction" means: when a byproduct or an intermediate product is recycled at the same mass rate as produced and thus at steady state the intermediate or byproduct species is not removed or produced from the process. The extinction recycle fraction is recycled to extinction in the present invention.

All range values provided herein are inclusive and combinable. All percentages are percentages by weight.

FIG. 1 is a schematic view of the operation of a preferred embodiment of the process of the invention. Referring to the Figure, the process of the present invention is carried out as follows.

A feed containing feed components of ethane and chlorine is fed to a reactor 10 ("reaction zone"). The feed may be substantially free of ethylene, alternatively free of ethylene. The feed components may be preheated individually or in combination, in any manner, and at any time prior to entry into the reactor 10. Prior art reference, CA 2097434 premixes ethane and chlorine below 200°C and heats the mixture after adding it to the reactor. This method requires heat exchangers and thus is more capital intensive than the process of the present invention, which uses a reactor that is operated at nearly adiabatic condition. Chlorine may be preheated to the inlet temperature or alternatively may comprise a temperature ranging from 20° to 80°C before it is combined with ethane. The chlorine may be co-fed into the reactor 10 with ethane, mixed with ethane and then added to the reactor 10, or added by other conventional means of introducing materials into a reactor.

Conventional reactors may be used. One suitable example of a reactor is a jet-stirred reactor. The temperature of the reactor 10 at the time of entry of reactants ("inlet temperature") ranges from 200 – 350 °C, alternatively from 250 – 330 °C, further alternatively from 260 – 320 °C. The chlorination reaction is carried out in the reactor 10. The chlorine is highly reactive with the ethane and reacts to produce a crude product wherein the crude product comprises an extinction recycle fraction, heavies, and product components. With the near adiabatic reactor condition, the exothermic reaction increases the crude product to a temperature higher than 350°C up to 700°C. This crude product is cooled by heat exchanging with coolant or by adjusting reactant ratios. This crude product leaving the heat exchanger may contain both a vapor phase and a liquid (heavies and extinction recycle fraction) reactor effluent.

The vapor phase and liquid reactor effluent are cooled further in a condenser 20 to condense the liquid. The liquid is provided preferably to a distillation column 40, or alternatively to a separation column 50. The vapor phase is compressed at a pressure greater than or equal to 689 kPa, alternatively greater than or equal to 1378 kPa and further alternatively greater than or equal to 1930 kPa in compressor 30 to enable efficient separation of ethylene and HCl from VCM and other crude products in the distillation column 40. The column 40 overhead stream comprising ethylene and HCl is further fed to distillation column 45 where the overhead stream containing mostly ethylene is recycled back to reactor 10. The bottom stream of column 45 containing HCl is recovered as byproduct for use in a downstream process. Instead of a distillation column, column 45 may also be an absorber unit where water could be used to remove HCl and recovered as an aqueous HCl stream as required by the downstream use.

The distillation column 40 bottom stream is fed to the separation column 50 where VCM is stripped of heavies. Limits on distillation column 40 bottom temperature should be less than or equal to 150°C, alternatively less than or equal to 100°C to minimize fouling/polymerization. The overhead stream of column 50 comprising VCM can be purified to very high levels for sale or significant amounts of HCl can be allowed to slip out the bottom of distillation column 40 and be sent for further purification to an existing or new conventional VCM finishing plant. The use of a partial condenser on overheads of distillation column 40 is preferred in the separation of the HCl and ethylene mixture from VCM and the produced heavy byproducts, since this provides a lower refrigeration load and hence lower operating cost as opposed to the use of total condenser. Separation column 50 is operated such that less than 100ppm of HCl is in overheads of separation column 50. More HCl impurity could be included if the process is integrated with a conventional VCM plant with excess VCM finishing capacity. The bottom stream of separation column 50 comprising heavies is further fed to column 60 where ethyl chloride is recovered in the overhead stream. This overhead stream is recycled back to the reactor so that ethyl chloride can be further reacted to produce VCM and heavies. A fraction of column 60 bottom stream is used to help condense the product effluent in unit 20. The rest of the separation column 60 bottom stream may be further processed to purify and separate ADI and EDC from the heavies for use in other downstream processes to produce VCM. The rest of the heavies can be fed to other chlorination processes to produce trichloroethylene and perchloroethylene. The reaction of

the present invention is continuous and the extinction recycle fraction is recycled to the reaction zone.

The products produced by the present invention are valuable items of commerce. For example, vinyl chloride monomer is consumed in huge quantities in the manufacture of plastic materials. Furthermore, the reaction of the present invention is highly efficient as greater than 95%, alternatively greater than 99% of the chlorine is converted during the reaction.

EXAMPLE

Process for the Chlorination of Ethane

Ethane is chlorinated to produce heavies, hydrogen chloride, and VCM in a thermal chlorination jet-stirred reactor. The jet-stirred reactor is simulated as described elsewhere (see Chapter 8.7 in "Cleaner Combustion: Developing Detailed Kinetics Models," F. Battin-Leclerc, J.M. Simmie, E. Blurock (Ed) (2013)) using kinetics reported by Dahl et al. [Ind. Eng. Chem. Res. 2001, 40, 2226-2235]. The thermodynamic properties are obtained from reported literature values (seehttp://webbook.nist.gov/chemistry/) and thermochemical kinetics approach (see S.W. Benson "Thermochemical Kinetics: Methods for the Estimation of Thermochemical Data and Rate Parameters," 1976). The reactor model is imbedded inside a process flow sheet simulation (see http://www.aspentech.com/products/aspen-plus.aspx) such that impacts of recycle can be evaluated.

The reactor pressure of 40 psia and reactant is preheated to higher than 200°C and reactor exit temperature is maintained by adjusting chlorine flow rate. The residence time is about 0.5 sec to 1 second depending on whether outlet or inlet flow rate is used, respectively.

Table 1. Process Operating Conditions and Feed, Recycle, and Product Composition

Inputs	Ex. 1
Cl_2/Ethane Molar Ratio	2.04
Reactor feed/reactor volume, kgmole/hr/m^3	714
Inlet temperature	292.5 °C
Outlet temperature	500 °C
Recycle /ethane, mass	10.29
Chlorine conversion	> 99%
Ethane conversion	65%
Total Product composition, wt %	
HCl	53.5
Vinyl chloride	18.6
Heavies	27.9
Total Heavies Composition, wt %	
EDC	60.1
ADI (1,1-dichloroethane)	28.7
111 (1,1,1-trichloroethane)	9.6
BTRI (1,1,2-trichloroethane)	1.0
11DCE (1,1-dichloroethylene)	0.4
other	0.2
Recycle composition, wt%	
Ethane	5.2
Ethylene	77.9
Ethyl chloride	16.9

CLAIMS

We claim:

1. A continuous process for producing hydrogen chloride, heavies, and vinyl chloride comprising
    a) reacting a feed comprising chlorine and ethane in a reaction zone to produce a crude product wherein the crude product comprises
        i. an extinction recycle fraction comprising ethylene and ethyl chloride, and
        ii. product components comprising hydrogen chloride, heavies, and vinyl chloride, and further wherein the heavies comprise 1,2-dichloroethane and 1,1-dichloroethane; and
    b) fractionally separating the extinction recycle fraction from the crude product.
2. The process of claim 1 wherein the 1,2-dichloroethane is separated from the heavies of step (ii).
3. The process of claim 1 wherein the 1,1-dichloroethane is separated from the heavies of step (ii).
4. The process of claim 1 wherein the extinction recycle fraction is recycled to the reaction zone.
5. The process of claim 3 wherein the extinction recycle fraction is recycled to extinction.
6. The process of claim 1 wherein the molar ratio of chlorine to ethane is greater than 1.1 but less than 3.0.
7. The process of claim 1 wherein the reaction is conducted at near adiabatic condition.
8. The process of claim 1 wherein the inlet temperature ranges from 200 – 350 °C.
9. The process of claim 1 wherein the reactor comprises an exit temperature ranging from 350 – 700 °C.
10. The process of claim 1 wherein the feed stream components are pre-mixed prior to being fed in the reactor.
11. The process of claim 1 wherein the feed stream components are not pre-mixed prior to being fed in the reactor.
12. The process of claim 1 further wherein greater than 95% of the chlorine is converted into products.

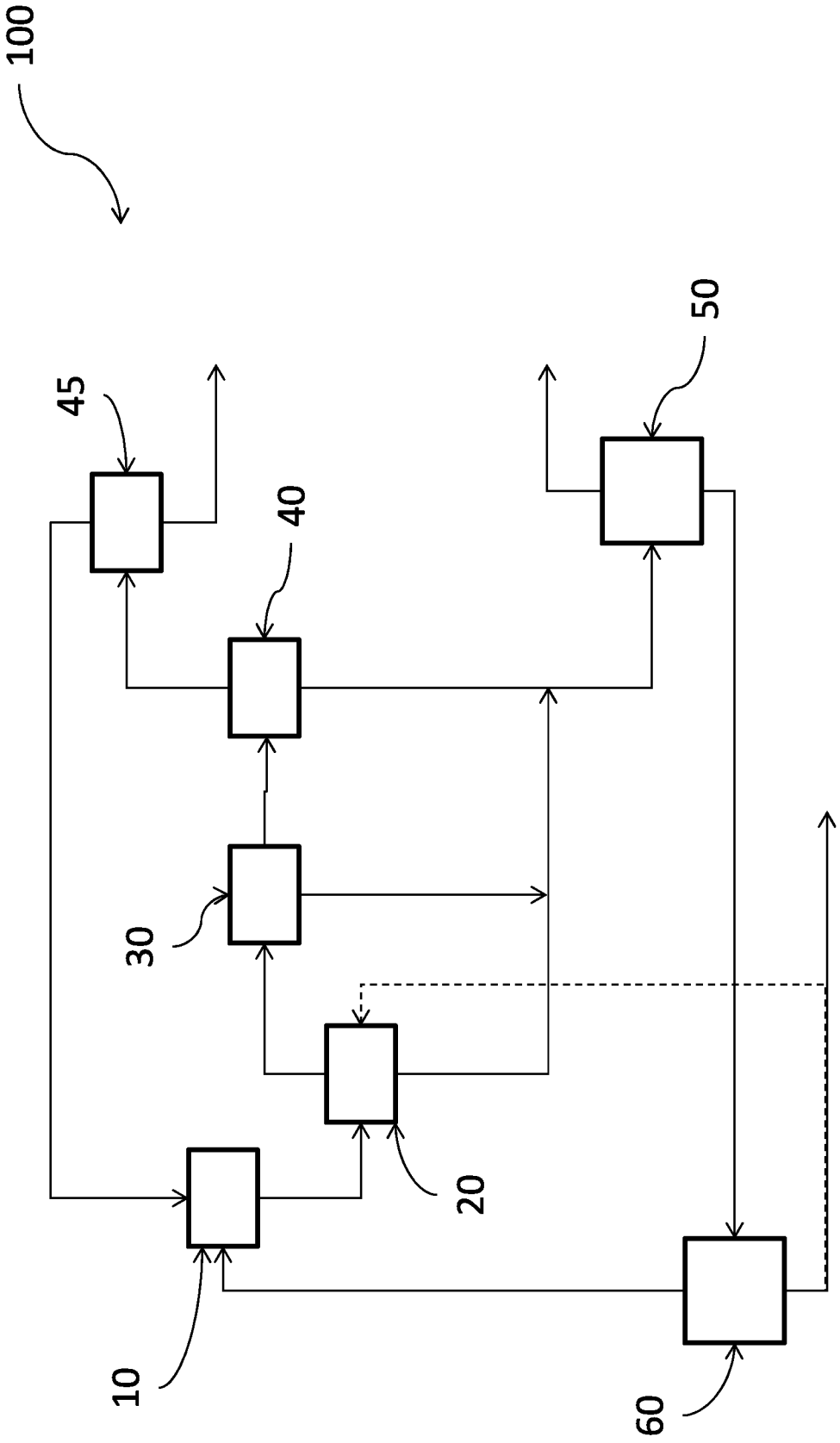

Figure 1.

INTERNATIONAL SEARCH REPORT

International application No
PCT/US2015/053158

A. CLASSIFICATION OF SUBJECT MATTER
INV. C07C17/00 C07C17/10 C07C21/06
ADD.

According to International Patent Classification (IPC) or to both national classification and IPC

B. FIELDS SEARCHED

Minimum documentation searched (classification system followed by classification symbols)
C07C

Documentation searched other than minimum documentation to the extent that such documents are included in the fields searched

Electronic data base consulted during the international search (name of data base and, where practicable, search terms used)
EPO-Internal, WPI Data

C. DOCUMENTS CONSIDERED TO BE RELEVANT

Category*	Citation of document, with indication, where appropriate, of the relevant passages	Relevant to claim No.
X	FR 2 178 078 A1 (LUMMUS CO [US]) 9 November 1973 (1973-11-09)	1-6,9-12
Y	abstract page 8, last paragraph pages 11-14 figure 2 claims 1-9	7,8

X	FR 2 281 911 A1 (LUMMUS CO [US]) 12 March 1976 (1976-03-12)	1-6,9-12
Y	abstract pages 7-10 figures 1, 2 claims 1-13	7,8

	-/--	

[X] Further documents are listed in the continuation of Box C.

[X] See patent family annex.

* Special categories of cited documents :

"A" document defining the general state of the art which is not considered to be of particular relevance

"E" earlier application or patent but published on or after the international filing date

"L" document which may throw doubts on priority claim(s) or which is cited to establish the publication date of another citation or other special reason (as specified)

"O" document referring to an oral disclosure, use, exhibition or other means

"P" document published prior to the international filing date but later than the priority date claimed

"T" later document published after the international filing date or priority date and not in conflict with the application but cited to understand the principle or theory underlying the invention

"X" document of particular relevance; the claimed invention cannot be considered novel or cannot be considered to involve an inventive step when the document is taken alone

"Y" document of particular relevance; the claimed invention cannot be considered to involve an inventive step when the document is combined with one or more other such documents, such combination being obvious to a person skilled in the art

"&" document member of the same patent family

Date of the actual completion of the international search	Date of mailing of the international search report
30 November 2015	09/12/2015

Name and mailing address of the ISA/	Authorized officer
European Patent Office, P.B. 5818 Patentlaan 2 NL - 2280 HV Rijswijk Tel. (+31-70) 340-2040, Fax: (+31-70) 340-3016	Dunet, Guillaume

1

Form PCT/ISA/210 (second sheet) (April 2005)

INTERNATIONAL SEARCH REPORT

International application No
PCT/US2015/053158

C(Continuation). DOCUMENTS CONSIDERED TO BE RELEVANT

Category*	Citation of document, with indication, where appropriate, of the relevant passages	Relevant to claim No.
X	FR 2 143 850 A2 (LUMMUS CO) 9 February 1973 (1973-02-09)	1-6,9-12
Y	abstract page 11, line 35 - page 15, line 36 figures 1-3 claims 1-17	7,8

X	US 3 304 337 A (JORDAN JR JAMES IRWIN ET AL) 14 February 1967 (1967-02-14)	1-6,9-12
Y	figure 1 column 7, line 28 - column 9, line 58 claims 1-13	7,8

X	US 5 705 728 A (VISWANATHAN KRISHNAN [US] ET AL) 6 January 1998 (1998-01-06)	1-6,9-12
Y	abstract figure 1 columns 5-9 claims 1-22	7,8

X	US 3 917 727 A (TSAO UTAH) 4 November 1975 (1975-11-04)	1-6,9-12
Y	abstract figures 1-3 columns 7-11 claims 1-14	7,8

1

INTERNATIONAL SEARCH REPORT

Information on patent family members

International application No
PCT/US2015/053158

Patent document cited in search report	Publication date	Patent family member(s)	Publication date
FR 2178078 A1	09-11-1973	AU 5375573 A	26-09-1974
		CA 993626 A	27-07-1976
		DE 2314786 A1	11-10-1973
		FR 2178078 A1	09-11-1973
		GB 1391580 A	23-04-1975
		IT 981628 B	10-10-1974
		JP S498492 A	25-01-1974
		JP S5249442 B2	17-12-1977
		NL 7304195 A	01-10-1973
		US 3968200 A	06-07-1976
		US 4129604 A	12-12-1978
FR 2281911 A1	12-03-1976	AU 8395575 A	17-02-1977
		BE 832410 A1	01-12-1975
		BR 7505205 A	03-08-1976
		CA 1076609 A	29-04-1980
		DE 2536286 A1	26-02-1976
		ES 440247 A1	01-03-1977
		FR 2281911 A1	12-03-1976
		GB 1523742 A	06-09-1978
		IT 1044588 B	31-03-1980
		JP S5143703 A	14-04-1976
		NL 7509757 A	18-02-1976
		US 3963584 A	15-06-1976
		US 4094915 A	13-06-1978
		ZA 7505233 A	28-07-1976
FR 2143850 A2	09-02-1973	DE 2230259 A1	11-01-1973
		FR 2143850 A2	09-02-1973
		GB 1360570 A	17-07-1974
		IT 1001497 B	20-04-1976
		JP S5735166 B1	27-07-1982
US 3304337 A	14-02-1967	DE 1518166 A1	28-08-1969
		DE 1668842 A1	14-10-1971
		ES 291002 A1	01-01-1964
		US 3304337 A	14-02-1967
US 5705728 A	06-01-1998	AT 139988 T	15-07-1996
		AU 665180 B2	21-12-1995
		AU 9144191 A	08-07-1992
		BR 9107183 A	16-11-1993
		CA 2097435 A1	07-06-1992
		CN 1063096 A	29-07-1992
		DE 69120686 D1	08-08-1996
		DE 69120686 T2	31-10-1996
		DZ 1544 A1	17-02-2002
		EP 0584074 A1	02-03-1994
		ES 2093247 T3	16-12-1996
		JP 3032577 B2	17-04-2000
		JP H06503573 A	21-04-1994
		US 5705728 A	06-01-1998
		WO 9210447 A1	25-06-1992
		ZA 9109561 A	26-08-1992
US 3917727 A	04-11-1975	CA 1078411 A	27-05-1980
		DE 2536228 A1	26-02-1976
		FR 2281912 A1	12-03-1976

INTERNATIONAL SEARCH REPORT

Information on patent family members

International application No
PCT/US2015/053158

Patent document cited in search report	Publication date	Patent family member(s)	Publication date
		GB 1460688 A	06-01-1977
		IT 1040160 B	20-12-1979
		JP S5143704 A	14-04-1976
		NL 7509756 A	18-02-1976
		US 3917727 A	04-11-1975