Jan. 3, 1939. R. S. MEDLEY ET AL 2,142,588

CEMENT MIXER MOUNTING AND DRIVE

Filed May 28, 1936 2 Sheets-Sheet 1

FIG. 1.

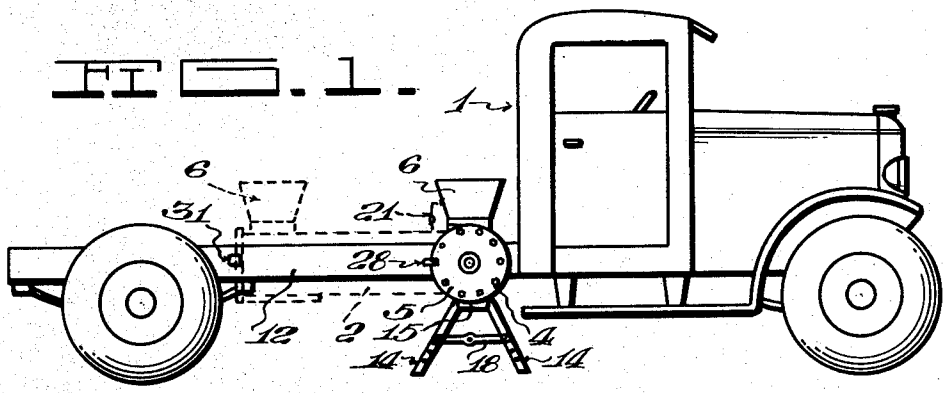


FIG. 2.

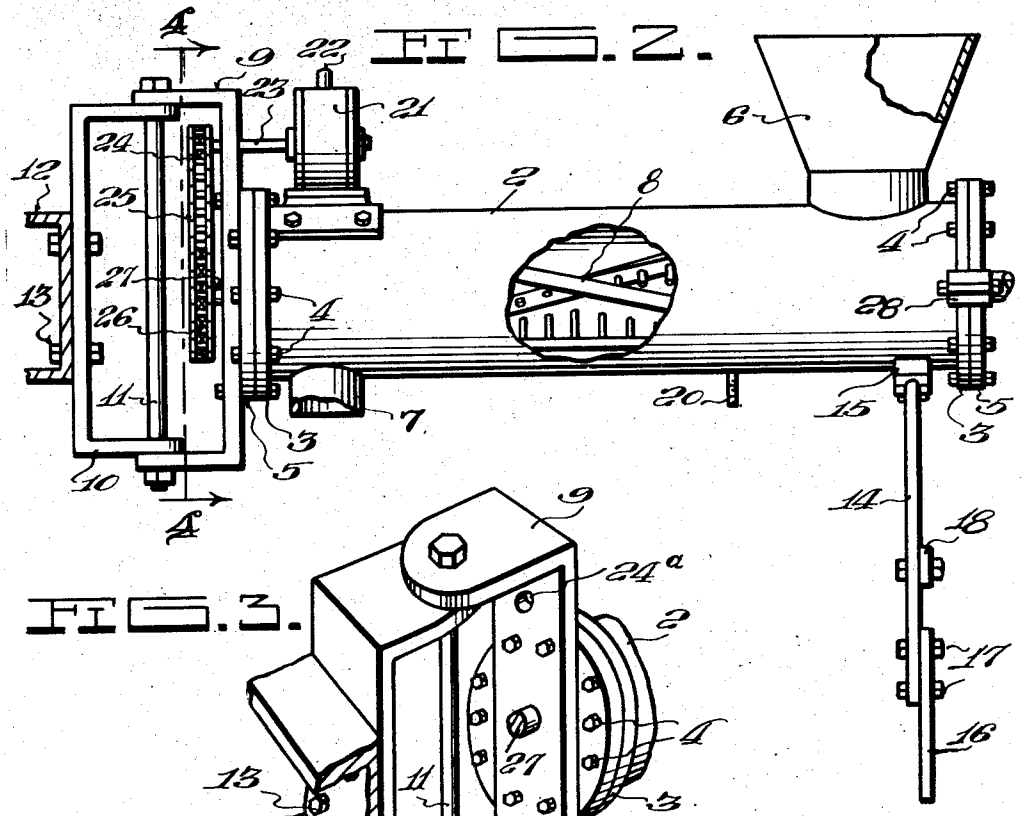


FIG. 3.




Turner A. Owen
Russell S. Medley
INVENTOR.

BY

ATTORNEY.

Jan. 3, 1939. R. S. MEDLEY ET AL 2,142,588

CEMENT MIXER MOUNTING AND DRIVE

Filed May 28, 1936 2 Sheets-Sheet 2

FIG. 4.

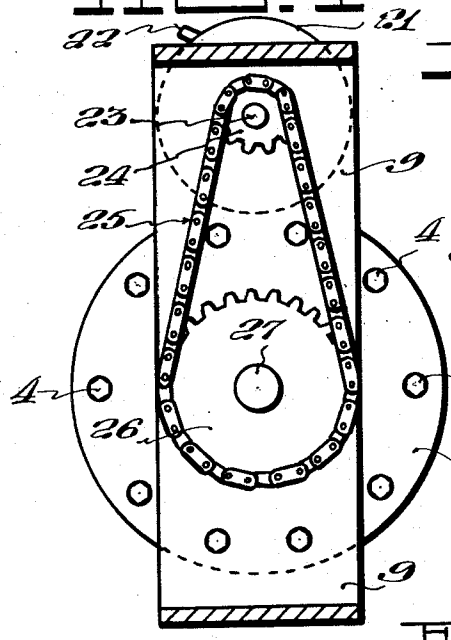


FIG. 5.

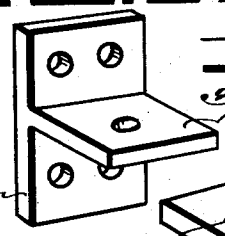


FIG. 6.

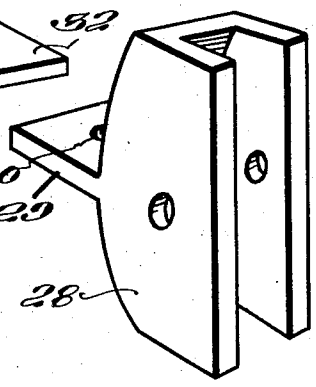


FIG. 2.

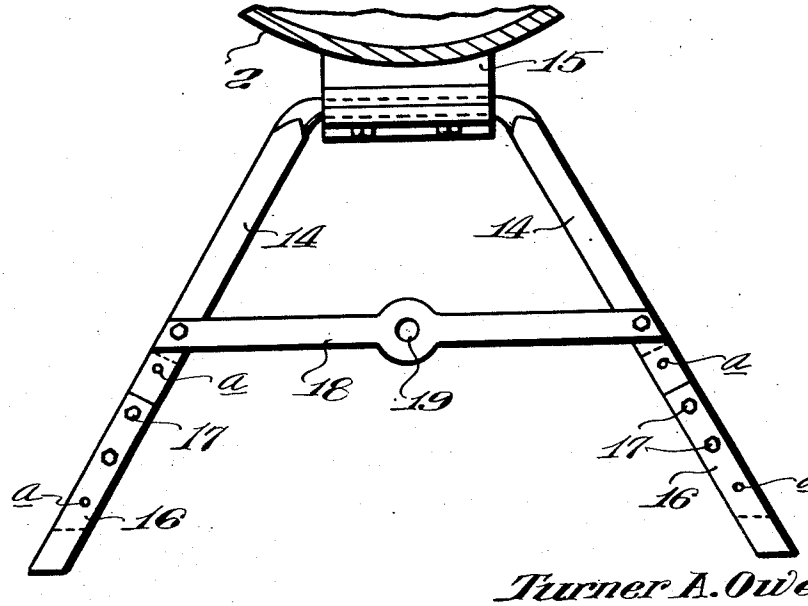


Turner A. Owen
Russell S. Medley
INVENTOR.

BY Ernest G. Bond
ATTORNEY.

Patented Jan. 3, 1939 2,142,588

# UNITED STATES PATENT OFFICE

2,142,588

## CEMENT MIXER MOUNTING AND DRIVE

Russell Sage Medley and Turner A. Owen, Longview, Tex., assignors, by direct and mesne assignments, to Sanford C. Brockman, Nueces County, Tex.

Application May 28, 1936, Serial No. 82,271

3 Claims. (Cl. 259—178)

This invention relates to well cementing equipment and it has particular reference to a cement mixer mounting and drive.

The principal object of the invention is to provide for convenience, utility and economy, means by which a mixing apparatus for cement may be mounted on and adjustable relative to the frame of an automobile truck so that the mixing apparatus may be moved to operative and inoperative positions without requiring its detachment from the truck frame.

Another object of the invention is to provide an adjustable support for the mixing apparatus when the latter is set up for operation and which support is capable of being retained under the mixing apparatus to be out of the way when the latter is inoperatively disposed on the truck frame.

Still another object of the invention is to provide for the mixing apparatus, a power unit which imparts rotation to the agitator shaft within the mixing chamber and is in fixed relation to the mixing apparatus and therefore movable therewith.

The invention further includes appurtenances adapted to maintain the elements of the combination in both operative and inoperative positions relative to the mounting.

With the foregoing objects as paramount the invention has particular reference to its salient features of construction and arrangement of parts, to become manifest as the description proceeds, taken in connection with the accompanying drawings, wherein:—

Figure 1 is a side elevation showing a truck such as employed in well cementing, illustrating the invention.

Figure 2 is an enlarged elevation of a cement mixing apparatus, showing the invention.

Figure 3 is a perspective view of the mounting embodying the invention.

Figure 4 is a vertical section on lines 4—4 on Figure 2.

Figure 5 is a detail perspective view of the retainer for the mixing apparatus.

Figure 6 is a perspective view of the element companion to that shown on Figure 5, and

Figure 7 is a detail end elevation of the adjustable support for the mixing apparatus.

Continuing with a more detailed description of the drawings, reference is primarily made to Figure 1 in which the reference numeral 1 designates the usual type of truck employed in connection with well cementing operations. It has been the practice to convey to a point of operations, all cementing equipment, which includes the mixing apparatus, unload the latter and place the same conveniently near the well so that its discharge may be flowed into the well. Also, the truck must be so arranged that power for operating the apparatus may be conveniently transmitted to the latter from the truck motor.

The present invention obviates the necessity of either removing the apparatus from the truck or employing the truck motor to drive the mixing apparatus, since provisions are made to furnish driving power to the latter from a source apart from the truck motor. These features will be presently described and explained.

The mixing apparatus shown in Figure 2 is comprised of a barrel or mixing chamber 2, the ends of which are flanged at 3 and apertured for bolts 4 to secure the plates 5.

A hopper 6 is mounted on one end of the chamber 2 for the introduction of cement and water, which is conveyed through the chamber 2 and thoroughly agitated to effect a uniform mixture thereof when discharged through the pipe 7 for introduction into the well.

The agitating means is shown at 8 in the cut away portion in the barrel 2, and illustrated in Figure 2.

The mixing apparatus described above has a hinge element 9 affixed to one end as shown in Figure 3. This element has a companion and similarly shaped element 10, with which it is pivotally and rotatably engaged by a pin 11 and this latter element 10 is affixed to the frame 12 of the truck 1, by bolts 13 or otherwise.

It is therefore apparent that when not in use, the barrel 2 may be disposed to lie alongside or parallel with the truck frame and that the elements 9 and 10 permit the barrel 2 to be displaced to a position at right angles to the truck frame, or substantially so, as shown in Figure 1. In this position, the mixing apparatus is in operative position and in such position, the operators are allowed to stand on either side of the machine to properly attend the same.

When in operative position, the end of the apparatus farthest from the truck is required to be supported and it is preferred that adjustment as to elevation be provided for. This is accomplished by an A-frame 14, shown in detail in Figure 7 whose upper end is rounded and rotatably secured in a bearing 15, the latter being affixed to the under-side of the barrel 2. The legs of the A-frame are extensible, being provided with extensions 16, apertured at *a* to conform with similar apertures in the legs of the frame. Bolts 17 se-

cure the extensions 16 to the legs of the frame at the desired elevation. A cross brace 18 maintains proper rigidity of the legs of the frame and has a central aperture 19 which receives a depending bolt 20 (Figure 2) underneath the barrel 2 when moved to inoperative position. A nut threaded onto the bolt 20 will be sufficient to hold the frame 14 securely against the barrel.

Mounted on the end of the barrel 2 opposite the hopper 6 is a steam turbine 21 of conventional construction. Steam for operating the turbine is obtained in any practical manner from an adjacent boiler, (not shown) at least one of which is available at the point of operations in practically all if not all cases. The steam is introduced into the turbine through the inlet 22.

Power shaft 23 of the turbine 21 passes through the aperture 24a in the hinge element 9 (Figure 3) and has a sprocket 24 (Figure 4) mounted thereon. A sprocket chain 25 surrounds this and another sprocket 26, mounted on the stub shaft 27 of the agitator or mixing element 8 of the mixing apparatus. Thus the element 8 is driven to effect mixture of cement and water, preparatory to its introduction into a well.

In Figures 5 and 6 is shown a casting 28, which is secured to the outer flange of the barrel 2 and has a projecting lip 29. This lip has an aperture 30 therein, as shown. A companion casting 31 is secured to the truck from 12 in the position shown in Figure 1 and has a similar lip 32 extending therefrom. When the mixing element is positioned as shown in dotted lines in Figure 1, the apertures of the two lips 29 and 32 register and a suitable bolt or pin is passed therethrough to hold the apparatus in position parallel with the truck frame 12 when not in use.

Manifestly the construction shown and described is capable of considerable modification and such modification as is considered within the scope and meaning of the appended claims is also considered within the spirit and intent of the invention.

What is claimed is:

1. In combination with a well cementing truck and a continuous cement mixing apparatus, having a mixing element, a mounting and drive for said apparatus comprising a substantially U-shaped member affixed to the frame of said truck, a similarly shaped member affixed to said mixing apparatus, said members jointly supporting the latter for swinging movement outwardly and at right angles relative to the side of said truck, adjustable means for supporting the outer end of said apparatus from the ground, means mounted on said apparatus for operating the mixing element of said apparatus, and means for securing said mixing apparatus inoperatively to said truck frame.

2. In combination with a well cementing truck, a continuous mixing apparatus and mounting therefor, the latter comprising complementary U-shaped members carried by the frame of said truck and said apparatus for hingedly supporting the latter relative to said truck and whereby said apparatus will be movable outwardly and at right angles relative to the side of the truck frame for operation, adjustable means for supporting said apparatus in the latter position, means mounted on said apparatus for driving the same and means for inoperatively securing said apparatus to the frame of said truck.

3. In combination with a well cementing truck, a cement mixing apparatus having a mixing element therein, a mounting for said mixing element comprising complementary U-shaped parts carried jointly by said mixing apparatus and the frame at the side of said truck, means for connecting said parts whereby said apparatus will be capable of swinging movement outward and inward relative to said truck, adjustable means for supporting said apparatus when moved outward from said truck, means affixed to said apparatus for operating said mixing element from a source remote from said truck and means for securing said apparatus inoperatively to the side of said truck frame.

RUSSELL SAGE MEDLEY.
TURNER A. OWEN.