Nov. 9, 1937. H. N. F. VERLOOP 2,098,841

STEAM GENERATOR

Filed April 10, 1937 2 Sheets-Sheet 1

Fig. 2.

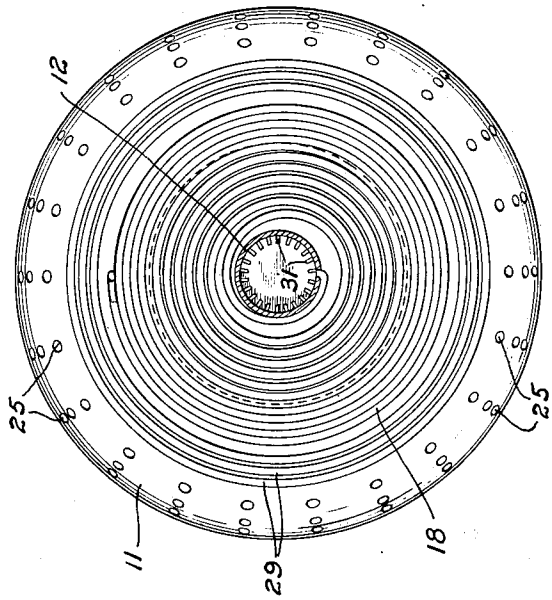

Fig. 1.

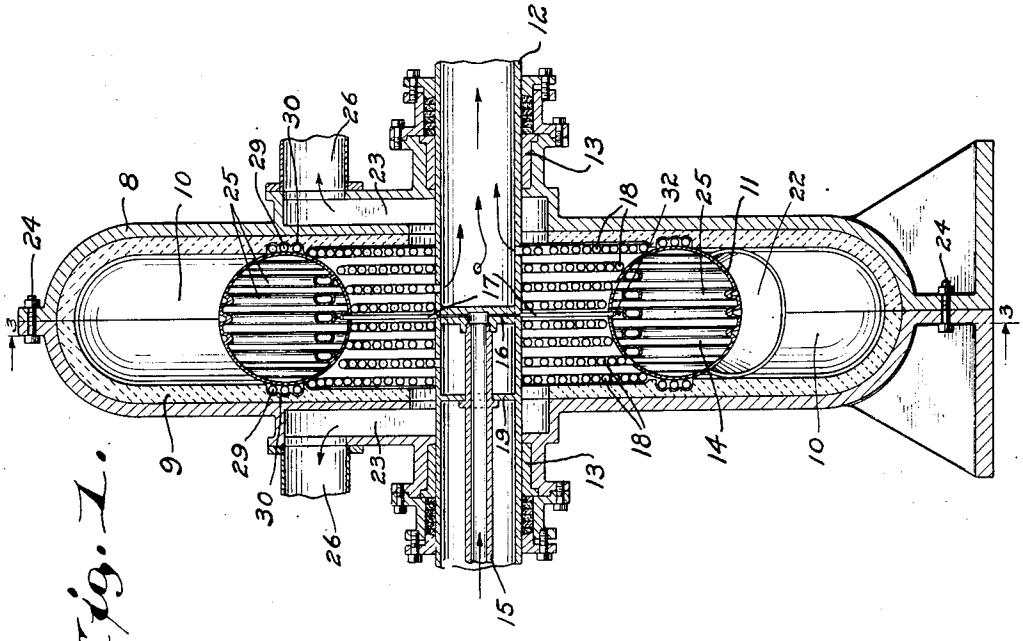

INVENTOR.
H. N. F. Verloop
BY
Morsell, Lieber & Morsell
ATTORNEYS.

Nov. 9, 1937. H. N. F. VERLOOP 2,098,841

STEAM GENERATOR

Filed April 10, 1937 2 Sheets-Sheet 2

Fig. 3.

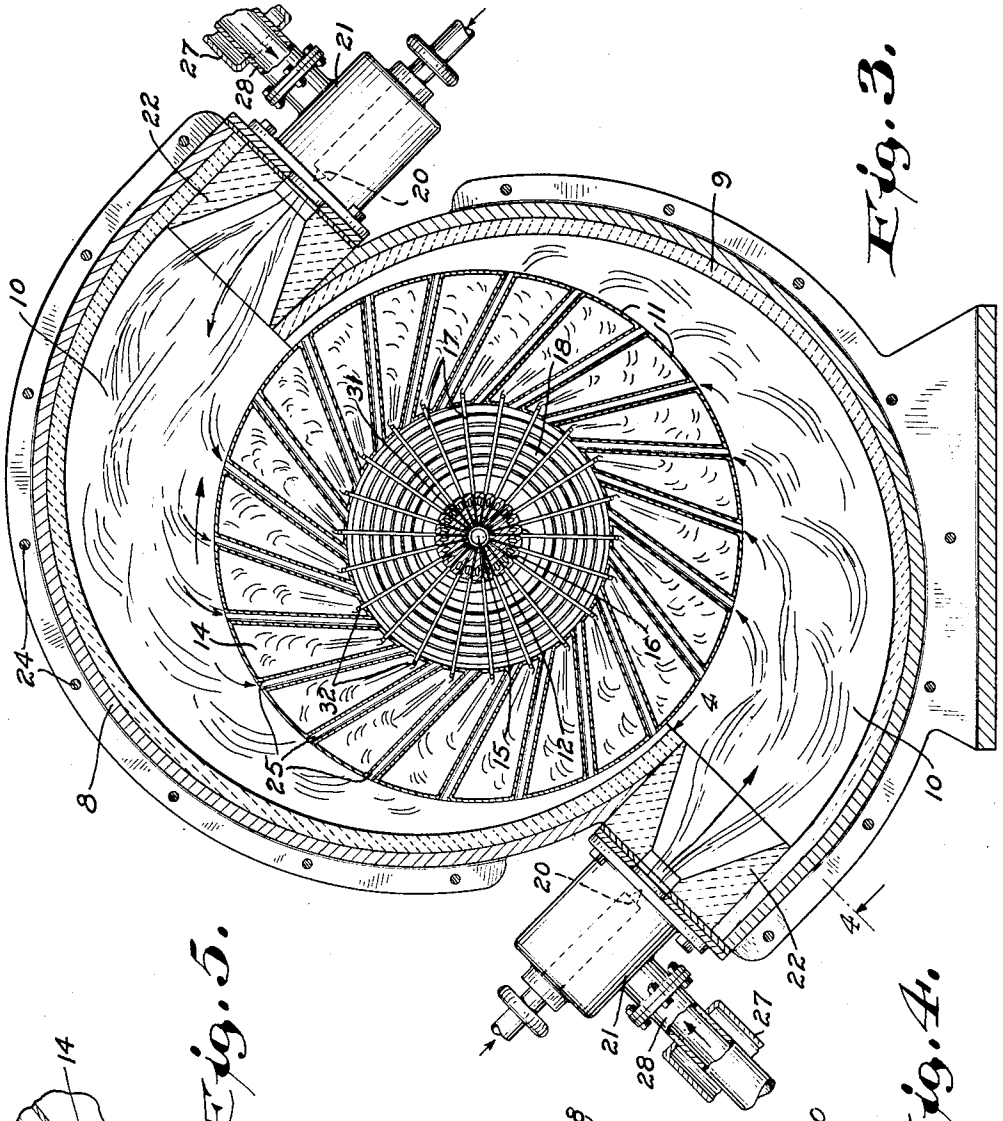

Fig. 5.

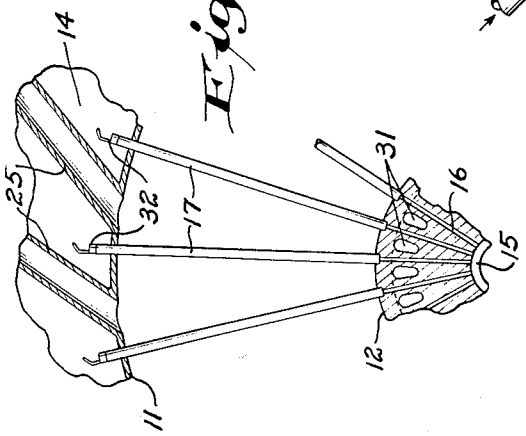

Fig. 4.

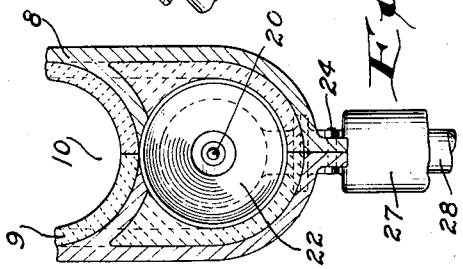

INVENTOR.
H. N. F. Verloop
BY
Morsell, Lieber & Morsell
ATTORNEY.

122. LIQUID HEATERS
& VAPORIZERS,
Examiner

Patented Nov. 9, 1937

2,098,841

UNITED STATES PATENT OFFICE

2,098,841

STEAM GENERATOR

Hendrik N. F. Verloop, Amsterdam, Netherlands, assignor of one-third to The Heil Co., Milwaukee, Wis., a corporation of Wisconsin

Application April 10, 1937, Serial No. 136,108

11 Claims. (Cl. 122—11)

My present invention relates in general to improvements in the art of generating steam, and relates more specifically to improvements in the construction and operation of boilers for converting liquid into steam for diverse uses.

Generally defined, an object of my present invention is to provide an improved steam generator which is extremely compact in construction, and which is moreover highly efficient in operation.

Some of the more specific objects and advantages of the invention may be defined as follows:—

To provide an improved boiler unit adapted to constantly, rapidly, and most effectively convert a stream of liquid into steam at any desired high pressure.

To provide a steam generating unit which is durable in construction and reliable in operation, and which occupies minimum space thereby making it especially adapted for use in the propulsion of vehicles for land, air or water.

To provide an improved steam generator of the rotary type, which may be fired by oil or gas, and directly within the rotor confining casing of the unit.

To provide a combined boiler and steam superheater, wherein the heat losses are reduced to a minimum, and which has maximum capacity considering the space occupied by the complete installation.

To provide a boiler plant which may be readily manufactured, installed and operated, and which can be conveniently produced in portable units.

To provide improved mechanism for constantly introducing water or other liquid into a rotary steam producing chamber, and for applying heated gases to such a chamber.

To provide various improvements in the construction and operation of rotary steam generators, whereby the efficiency and safety of such devices is enhanced to a maximum without introducing structural complications.

The above and other objects and specific advantages will be apparent from the following detailed description.

A clear conception of embodiments of the various features constituting my present invention, and of the mode of constructing and of operating steam generators built in accordance with the improvements, may be had by referring to the drawings accompanying and forming a part of this specification wherein like reference characters designate the same or similar parts in the various views.

Fig. 1 is a central longitudinal vertical section through one of the improved steam generating units;

Fig. 2 is an end view of the steam generating rotor of the unit shown in Fig. 1;

Fig. 3 is a transverse vertical section through the steam generating unit, taken along the line 3—3 of Fig. 1;

Fig. 4 is a radial section through a fragment of the steam generating unit, the section being taken along the line 4—4 of Fig. 3; and

Fig. 5 is an enlarged fragment of the rotor showing the structure for delivering the feed water to the steam generating chamber.

While my invention has been shown rather diagrammatically and as being applied to a particular style of rotary steam generator, especially adapted for converting water into steam, it is not the intent to thereby unnecessarily restrict the scope, since some of the novel features may obviously be applied to other types of boilers for converting other fluent materials such as mercury into vapor.

Referring to the drawings, the improved steam generating unit shown therein by way of illustration, comprises in general a centrally divided main casing 8 having a lining 9 of refractory material forming oppositely disposed firing chambers 10; an annular revolving casing 11 rotatably supported within the fixed casing 8 between the chambers 10 by means of a central hollow rotary shaft 12 coacting with end bearings 13, and forming a steam generating chamber 14 surrounding the supporting shaft; a feed water supply pipe 15 disposed centrally within the shaft 12 and communicating through small radial passages 16 and radial pipes 17 with the interior of the chamber 14; a series of spiral tubular elements 18 supporting the revolving casing 11 concentrically of and upon the shaft 12, and forming steam conducting conduits leading from the chamber 14 to the interior of the shaft beyond the transverse partition 19; fluent fuel supply burners each having a fuel injection nozzle 20 and an air supply casing 21 extending tangentially of the rotor casing 11 and directed into an adjacent combustion chamber 10 through a refractory member 22; and spent gas conduits 23 located on opposite sides of the casing 8 and extending away from the rotor confining chamber of this casing near the steam delivery ends of the tubular elements 18.

The sections of the main casing 8 may be firmly but detachably connected by means of a series of bolts 24, and the refractory lining 9 is also

preferably formed of several renewable sections as shown. The tubular revolving casing 11 is rotatable in the direction indicated by the arrow in Fig. 3, and the annular steam generating chamber 14 formed by the casing 11 is pierced by a series of tubes 25 forming hot gas conducting conduits which connect the combustion chambers 10 with the space surrounding the spiral tubular elements 18 and which communicate laterally with both of the gas discharge conduits 23. The spent gas conducting conduits 23 may be connected by pipes 26 either with a heater for the feed water admitted through the central pipe 15, or with jackets 27 surrounding the combustion air supply pipes 28, or the spent gases may be utilized for any other purpose. In order to compel all of the gases of combustion from within the chambers 10, to pass through the heat transfer tubes 25, the opposite sides of the revolving casing 11 are preferably provided with suitable baffles or rotary seals. As shown in Figs. 1 and 2, each of these seals comprises a series of circular tubes 29 secured to the adjacent side of the casing 11 and communicating with the steam generating chamber 14 through a series of openings, these tubes 29 being revolvable within correspondingly shaped annular recesses 30 formed in the refractory lining 9.

The heat transfer tubes 25 are preferably disposed tangent to a circle surrounding the axis of the rotor shaft 12, and extend inwardly in a direction opposite to the direction of normal rotation so that the hot gases injected into the chambers 10 by the tangential members 22 will flow through the tubes 25 with least resistance. The fuel supply burners which are shown diagrammatically only, may be of any suitable type wherein the nozzles 20 are either manually or automatically adjustable to control the fluent fuel supply, and in which fresh combustion air is constantly delivered from a fan or blower through the pipes 28 and air supply casings 21 to produce a combustible mixture, which is ignited in the diverging refractory members 22 in a well known manner. The burners and the supporting members 22 are preferably detachably connected to the main casing 8 so as to permit convenient removal of these parts for inspection of the chambers 10.

The feed water supply pipe 15 may communicate with any suitable source, and the diaphragm in the shaft 12 within which the passages 16 are formed, is provided with an annular series of through openings 31 for permitting free passage of the generated steam therethrough. The delivery end of each of the radial pipes 17, is provided with a special atomizing and deflecting nozzle 32 as shown enlarged in Fig. 5. These nozzles 32 besides being formed to deliver the preheated feed water in the form of a fine spray into the steam generating chamber 14, are adapted to deliver this spray tangentially between the inclined tubes 25 and in the direction of rotation of the casing 11. The outer ends of the spiral tubular elements 18 are in open communication with the steam generating chamber 14 along the inner side of the casing 11 and between the inner ends of the gas conducting tubes 25, while the inner ends of the tubular elements 18 communicate with the interior of the hollow shaft 12.

The casings 8, 11, tubes 25, 18 and the shaft 12 are all preferably formed of corrosion resisting material having high heat conductivity, and the rotor may be revolved at any suitable speed in any convenient manner. While the rotor supporting bearings 13 have been shown rather diagrammatically, these bearings should be formed to effectively withstand the relatively high temperatures to which they will be subjected during normal operation of the steam generating unit.

During normal operation of the improved steam generator, the rotor is being revolved at high speed in the direction indicated by the arrow in Fig. 3, hot gases of combustion are being injected into the combustion chambers 10 located above and below the rotor, and feed water is being constantly supplied in regulated quantities through the pipe 15, passages 16 and pipes 17 to the steam generating chamber 14. The hot gases generated within the combustion chambers 10, pass through the tubes 25 and through the space surrounding the spiral tubular elements 18, being thereafter discharged through the openings 23 and pipes 26. In the event that these hot gases are utilized to preheat the air delivered to the casings 21, the spent gases passing through the pipes 26 are delivered through the jackets 27, but these spent gases may be utilized for any other desirable heating purposes. As the feed water flows in regulated quantities through the pipes 17, it is heated by the hot gases flowing thereabout, and the nozzles 32 subsequently deliver the preheated feed water in atomized form into the steam generating chamber 14 between the tubes 25 and along the same, as indicated in Fig. 3. The atomized liquid is quickly converted into dry steam as it proceeds toward the periphery of the revolving casing 11, and the pressure thus created forces the steam through the spiral tubular elements 18 and through the pipe 12 to a source of utilization, as indicated in Fig. 1. It will thus be noted that the steam generator functions to constantly convert the feed water into steam at any desired pressure, so long as the rotor is revolving and hot gases are generated in the combustion chambers 10.

It should be noted that the disposition of the tubes 25 and the formation of the nozzles 32 is of relative importance since these elements cooperate to most effectively convert the atomized liquid into steam. The generated steam is constantly and quickly delivered from the steam generating chamber 14 by the spiral tubular elements 18, and the annular seals 29 function to compel all of the hot gases from within the chambers 10, to flow through the tubes 25 and around the spiral tubular elements 18 and pipes 17. During the passage of the hot gases about the elements 18 and pipes 17, the steam passing through the former and the feed water flowing through the latter, are heated by these gases so as to reduce to a minimum the temperature of the waste gases and thereby increase to a maximum the efficiency of the steam generating unit. The assemblage is obviously relatively simple in construction and is unquestionably very compact and has enormous steam generating capacity. The operation of the unit is moreover entirely automatic, and all parts thereof are readily accessible for inspection and cleaning. While means have been shown for utilizing the waste gases delivered from the pipes 26 for the purpose of preheating the air admitted to the combustion chambers through the pipes 28, some or all of these waste gases may be utilized for the purpose of heating the feed water entering the pipe 15, and any suitable means may obviously be utilized for the purpose of revolving the rotary steam generating chamber.

It should be understood that it is not desired to

122. LIQUID HEATERS & VAPORIZERS,

Examiner

11

limit this invention to the exact details of construction or to the precise mode of operation herein shown and described, for various modifications within the scope of the claims may occur to persons skilled in the art.

I claim:—

1. In a steam generator, a casing forming an annular chamber revolvable about its axis of annularity, means for conducting hot gases inwardly through said chamber, atomizing nozzles for delivering liquid outwardly within said chamber, and means for conducting steam away from said chamber inwardly toward said axis.

2. In a steam generator, a casing forming a revolving steam generating chamber, a fuel combustion chamber surrounding said casing, means for conducting hot gases from said combustion chamber inwardly through said steam generating chamber, a series of atomizing nozzles for delivering liquid outwardly within said steam generating chamber between said hot gas conducting means, and means for conducting steam inwardly away from said steam generating chamber.

3. In a steam generator, a casing forming a revolving steam generating chamber, a fuel combustion chamber surrounding said casing, means for conducting hot gases from said combustion chamber inwardly through said steam generating chamber, a series of atomizing nozzles for delivering liquid outwardly within said steam generating chamber between said hot gas conducting means, means for conducting steam inwardly away from said steam generating chamber, and means for subjecting said steam conducting means to further heating by the hot gases.

4. In a steam generator, an annular tubular casing forming a steam generating chamber, a shaft rotatably supporting said casing, a series of conduits extending inwardly through said chamber, means for delivering atomized liquid into said chamber, steam conducting elements connecting said casing and said shaft, and means for delivering heating medium through said conduits and along said steam conducting elements.

5. In a steam generator, an annular tubular casing forming a steam generating chamber, a shaft rotatably supporting said casing, a series of conduits penetrating said chamber and extending tangentially with respect to a circle surrounding the axis of said shaft, means for delivering atomized liquid into said chamber between said conduits, steam conducting means leading from said chamber, and means for delivering heating medium through said conduits.

6. In a steam generator, an annular tubular casing forming a steam generating chamber, a shaft rotatably supporting said casing, a series of conduits penetrating said chamber and extending tangentially with respect to a circle surrounding the axis of said shaft, means for delivering atomized liquid into said chamber between said conduits, steam conducting conduits connecting said casing with said shaft, and means for delivering heating medium through said chamber penetrating conduits and along and between said steam conducting conduits.

7. In a steam generator, an annular tubular casing pierced by a series of gas conducting conduits, a rotary support for said casing, a series of spiral conduits connecting said casing and said support, atomizing nozzles for delivering liquid to said casing, and means for delivering heating medium to said gas conducting conduits.

8. In a steam generator, an annular tubular casing pierced by a series of gas conducting conduits, a rotary support for said casing, a series of spiral conduits connecting said casing and said support, means for delivering liquid to said casing, means forming a combustion chamber communicating directly with the outer ends of said gas conducting conduits, and means for conducting the gases from the inner ends of said conduits along said spiral conduits.

9. In a steam generator, means forming an annular steam generating chamber rotatable about an axis, a series of nozzles for delivering atomized liquid outwardly into said chamber and in the direction of rotation thereof, and a series of hot gas conducting conduits extending inwardly through said chamber and in a direction opposite to said rotation.

10. In a steam generator, a main casing forming a combustion chamber and having a gas outlet, a rotary casing housed within said main casing and being exposed to said chamber, a series of conduits penetrating said rotary casing and connecting said chamber with said outlet, and means for injecting atomized liquid into said rotary casing around said conduits.

11. In a steam generator, a main casing forming a combustion chamber and having a gas outlet, a rotary casing housed within said main casing and being exposed to said chamber, a series of conduits penetrating said rotary casing and connecting said chamber with said outlet, means for injecting atomized liquid into said rotary casing around said conduits, and means for conducting steam away from said rotary casing through the gases leaving said main casing through said outlet.

HENDRIK N. F. VERLOOP.