Dec. 29, 1953 S. B. SCHNITTER 2,664,163

WELL CEMENTING APPARATUS

Filed April 16, 1949 3 Sheets-Sheet 1

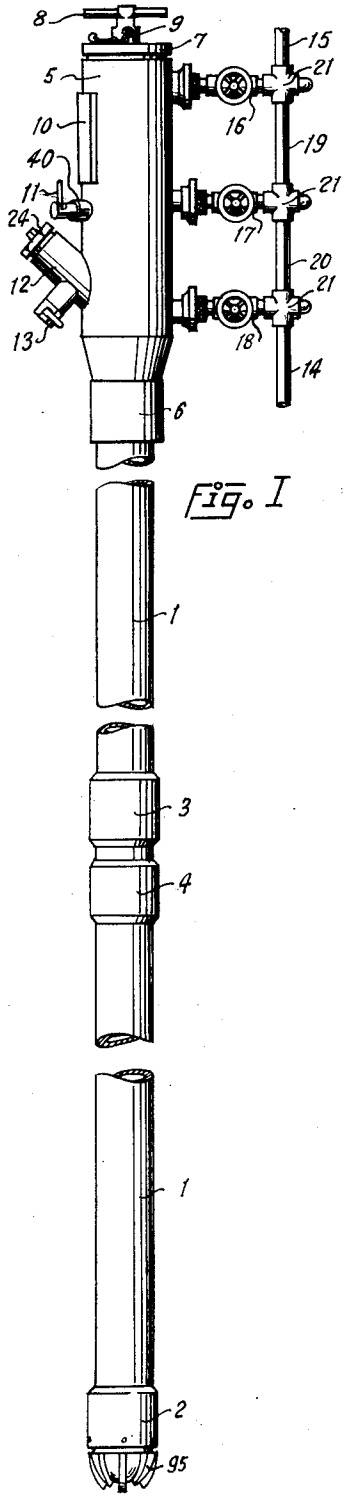

Fig. I

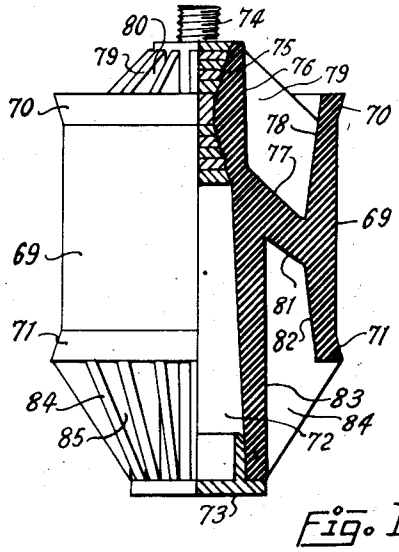

Fig. II

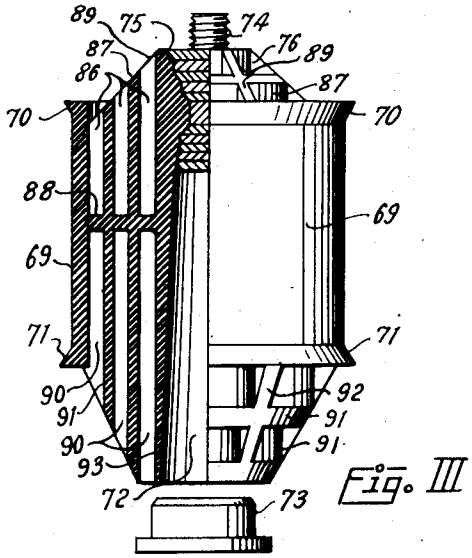

Fig. III

Sylvester B. Schnitter
INVENTOR.

BY J. Klaus Hilliker

ATTORNEY

Dec. 29, 1953 S. B. SCHNITTER 2,664,163

WELL CEMENTING APPARATUS

Filed April 16, 1949 3 Sheets-Sheet 2

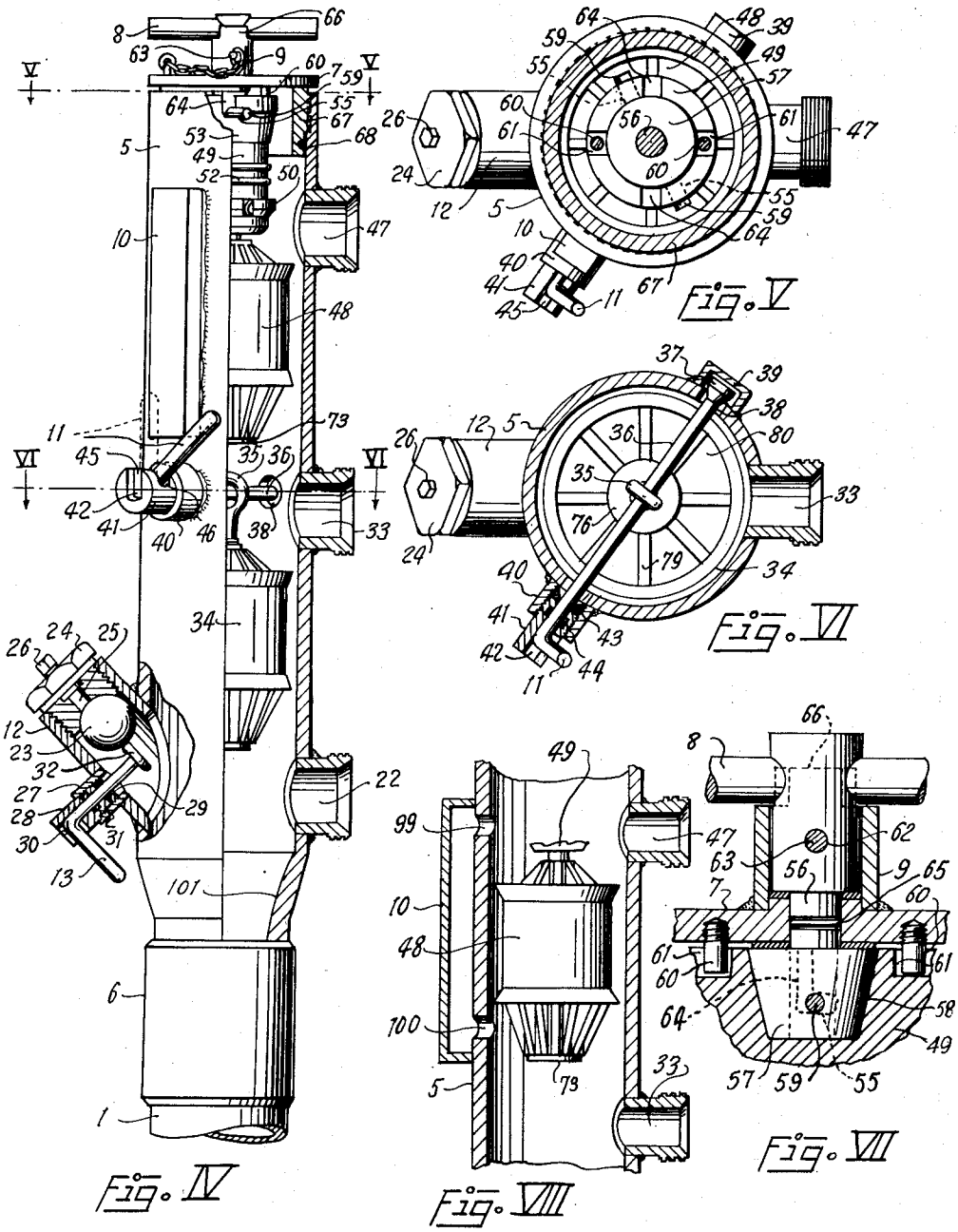

Fig. IV

Fig. V

Fig. VI

Fig. VII

Fig. VIII

Sylvester B. Schnitter
INVENTOR.

BY

ATTORNEY

WELL CEMENTING APPARATUS

Filed April 16, 1949 3 Sheets-Sheet 3

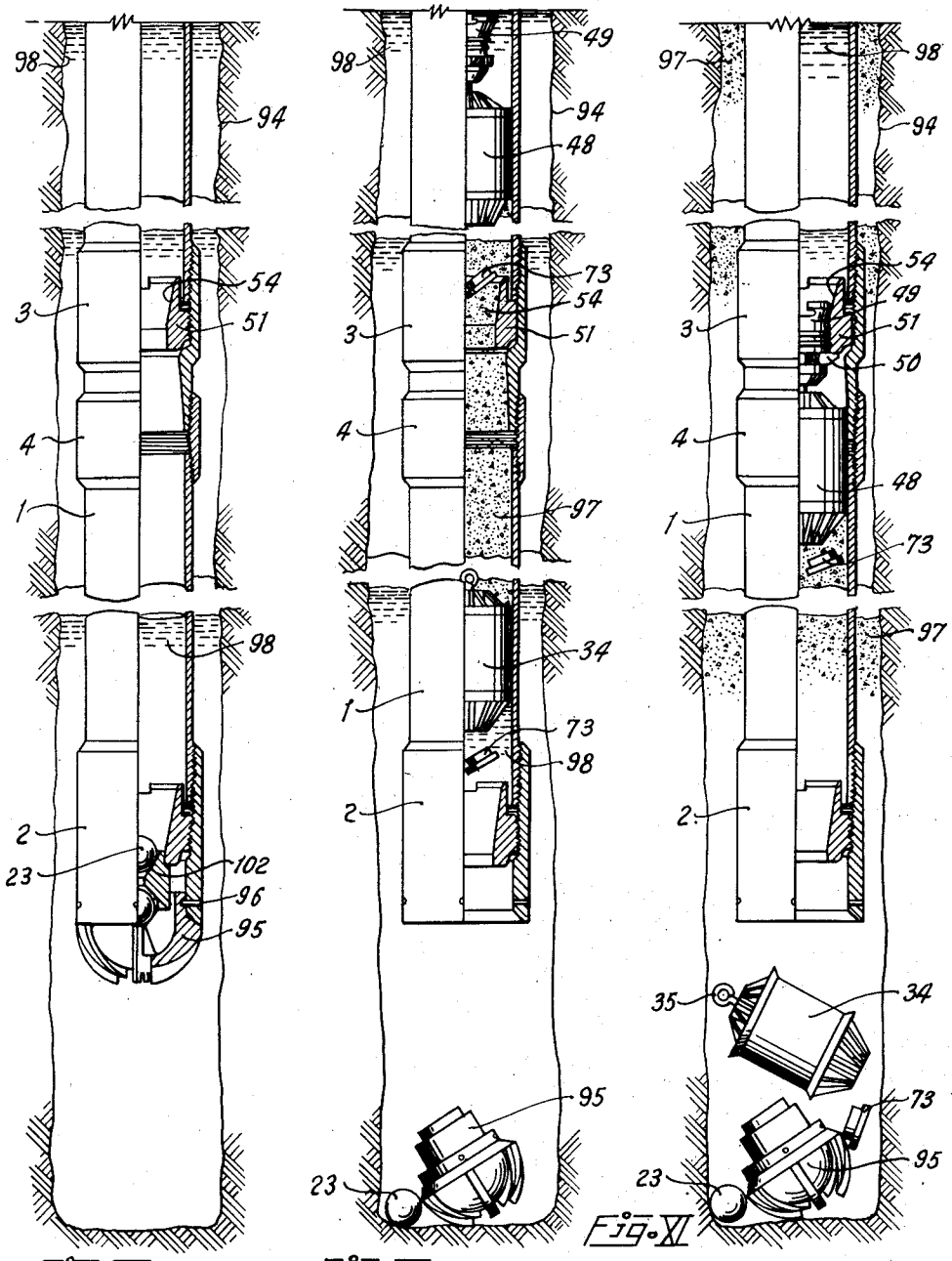

Fig. IX Fig. X Fig. XI

Sylvester B. Schnitter
INVENTOR.

BY

ATTORNEY

Patented Dec. 29, 1953 2,664,163

UNITED STATES PATENT OFFICE

2,664,163

WELL CEMENTING APPARATUS

Sylvester B. Schnitter, Dallas, Tex., assignor to L. L. Rector, Tarrant County, Tex.

Application April 16, 1949, Serial No. 88,020

8 Claims. (Cl. 166—1)

1

This application concerns improvements in apparatus for cementing casing to strata in a well bore; and particularly concerns improvements in the segregation of fluids in a well casing for the purpose of maintaining the homogeneity and uncontaminated state of such fluids used during a well cementing operation.

The essential purpose in discharging a cementitious slurry material free of contamination from casing into a well bore behind the casing is to seal off selected sub-surface strata. The uncontaminated slurry bonds the casing to the said strata which are thus blocked to prevent intercommunication of migrate fluids vertically along the casing.

The failures to obtain successful results when bonding casing to well bore strata are due to the intercommunicating action of fluids during the pumping cycle. This said action, known as channeling, consists of the mingling infiltration of a slurry into or from a typical well mud during the time the slurry is moved in the well casing. Obviously, a contaminated slurry mass, incapable of forming a true set behind a casing, constitutes a region of weakness in the well bore and permits migration of strata fluids past the intended cementing bond.

More than one fluid is pumped in the flow circuit during a cementing operation. These fluids are divergent ones, differing in character and properties. Normally a slurry is heavier in fluid weight than the typical well mud displaced, though it is not unusual to have the said well mud heavier than the slurry.

As a result of the varied resistances of ordinary well fluids to flow motion, and which said resistances co-act simultaneously with the attraction to the forces of gravity to the said fluids, it is obvious that the said fluids must be effectively separated and disjoined in a casing bore to maintain their arranged order therein to prevent contaminate comingling of the said fluids.

My invention supplies positive means to segregate ordinary fluids moved in the casing bore during a well cementing operation. My invention will permit the discharging of the said fluids homogeneously and uncontaminated from the casing bore.

For this purpose of fluid segregation, I have provided sealing and pliant cementing plugs of resilient material to prevent the intercommunication of the said fluids through or about the structures of the said plugs. My cementing plugs suitably establish and maintain defined regional areas of fluids in casing bores during

2

movement of the said fluids therein, and is especially adapted for use with my cementing method and apparatus disclosed in my co-pending application Serial No. 757,452, filed on June 27, 1947.

In former cementing practices, there are disclosed several forms of conventional spacer plugs intended to segregate the portions of slurries from the well muds to prevent free contacting fluid interfaces in casing bores. These said cementing plugs have flexible and slideable wipers or slideable and yieldable limiting sealing members, easily flexed in collapsed movement, which permit the bypass and intermixing of fluids.

A former conventional primary or bottom plug, and a former conventional top plug, used collectively to segregate a slurry from the well mud, cooperated to create slurry contamination. That is to say, a heavier slurry was permitted to by-pass about a conventional primary plug into a lighter well mud below, and a similar said heavier slurry was permitted to by-pass about a conventional top plug into a lighter well mud above; also, a heavier well mud was permitted to by-pass about a conventional primary plug into a lighter slurry above, and a similar said heavier mud was permitted to by-pass about a conventional top plug into a lighter slurry below.

My cementing plug supplies positive segregation when spacing fluids. It is made from natural or synthetic rubber or the like. They are thus sealingly pliant and have a resilience or energy of positive response in fast comeback after deforming and releasing.

The properties of the resilient stock from which my plugs are made, after vulcanization, tend to approach those of completely elastic material. When subjected to shearing stresses, such stocks will flow in elongation and distortion, and are capable of quickly recovering their original shape by virtue of elasticity.

My plugs are used for the primary plug and also for the top plug in cementing operations.

When used as a primary plug it is pressured for movement in a casing bore. This pressure is supplied from the pumps during and after the introduction of the primary plug into the casing bore when the well mud is the heavier fluid in the cementing circuit. When the slurry is the heavier fluid in the cementing circuit, the said slurry exerts the force of pressure on my primary plugs after their introduction into the cementing circuit.

The said forces exerted penetrate into the interstices of my primary plug located on the up-

per side, and is confined therein above the baffle by the areas defined by the upper webs, inner cylinder and sealing face. Since a pressure acts equally at the interfaces of two fluids in motion, and since rubber acts like a fluid, a substantially similar pressure is present below my segregating primary plug. The said pressure, therefore, is penetrably present within the lower interstices of my primary plug below the baffle and is confined therein by the areas defined by the lower webs, inner cylinder and sealing face, and also by the hollow bore of my primary plug.

The sealing faces of my cementing plugs do no possess slideable wipers or easily flexing and collapsing limited seals when segregating fluids in a casing bore. My cementing plugs are oversize for the casing bores wherein they are used, and they have elongated and continuing sealing faces.

My cementing head is a novel arrangement which provides the orderly pressured induction of my cementing plugs into a casing bore. My cementing plugs are made oversize, to possess frictional contact to the walls of casing bores. My plugs, therefore, must be deformed to lesser sizes than casing bore sizes in order to acquire their said frictional contacts within the casing bores.

My cementing head has a bore diameter greater than the casing bore diameter to permit the easy insertion of my plugs into the cementing head, and the said cementing head has a region of lesser bore diameter than the casing bore diameter, at the place of joinder with the casing, in order to supply deformation to my plugs for their subsequent conformable seals to the casing bore walls.

When my cementing plug, the central opening of which was previously filled with fluid and retained therein by a stopper, is pressure deformed through the region of lesser diameter of my cementing head, the plug elements become resiliently stretched. Thus the said stopper is forcibly ejected from the plug to permit quantitative fluid discharge from the bore of the plug. The contour of the plug, thereby reduced, is then elastically reformed when entering the casing bore, which reforming is assisted by fluid return to the bore of the plug. This action of fluid return to the plug bore is resultant from the force of suction created within the bore of the plug by the said previous fluid discharge from the plug under submergence.

My plug is so constructed with a hollow bore and spaced interstices around the ends thereof that it may be easily deformed and reformed but at the same time is provided with stability when submerged under pressure.

My cementing plugs are inserted in the cementing head prior to attaching the cementing head to the casing string. This inserting of plugs is done at the derrick floor where easy access to the bore of the cementing head is available to arrange their order. Releasable members retain the fixed positions of the plugs in the cementing head until the plugs are freed in sequenced order for proper pressured positioning in the casing bore.

Thus my plugs are arrayed in the casing bore whereby a preceding or primary plug is placed below the initial portions of a slurry charge and a top plug is placed above the final portions of the said slurry.

My plug may also be used to segregate a dispersing fluid from the ordinary fluids when desired. In fact it may be used to segregate all fluids used in a cementing operation.

Among the objects to be accomplished by my invention, in addition to the foregoing, may be found the following:

1. The provision of a new type of fluid segregating plug to be used in the segregation of fluids in a conduit, which plug is made of pliant and elastically retractable material so that it may be deformed by pressure and reformed by elastic recovery action when pressure is relieved or partially relieved therefrom.

2. The provision of such a plug made of larger diameter than the casing through which it is intended to pass, the plug being contracted for admission into the casing so that the outer side thereof will have tight frictional engagement with the inner walls of the casing through which it passes.

3. The provision of such a plug with an elongated outer face thereon which provides for additional surface for contact with the inner walls of the casing to prevent fluid from by-passing around the plug from above and below same.

4. The provision of such a plug with an elongated outer face thereon and an upper lip and a lower lip around the upper and lower side thereof, which lips are extended outward from the outer face of the plug, and provided so that when the plug is contracted by pressured movement through the well pipe the said lips will be elongated and brought in the same plane with the outer face of the plug so that a tight frictional engagement will be brought about between the outer walls of the plug and the inner surface of the well pipe, and to also compensate for frictional wear on the outer surface of the plug as it is moved by pressure through the well pipe.

5. The provision of such a plug with a series of spaced interstices around each end thereof, said interstices being separated by a series of webs forming walls thereof, and the interstices at the upper and lower edges thereof having a common bottom defined by a baffle.

6. The provision of such a plug having a hollow interior closed at one end by a connector member so that the plug may be connected to another member and thus convey it through the well pipe, and said hollow interior being open at its other end and adapted to be closed by a stopper or other suitable closure member.

7. The provision of a modified form of such plug in which there are a series of peripheral skirts around the upper and lower ends thereof connected together by a series of web members, such skirts and web members forming a series of spaced interstices about the upper and lower ends of the plug, said interstices having a common bottom defined by a baffle.

8. The provision of a special cementing head for use with the aforesaid plug which head is adapted to be attached to the upper end of a string of casing, and has an inner diameter at the place of joinder between the head and the casing of lesser diameter than the interior diameter of either the head or the casing, whereby when the plug is forced by pressure through the smaller opening it is deformed and elongated, so that upon passing the constricted opening it will elastically relax against the inner walls of the casing and provide a uniform and tight seal. Also such constriction causes the expulsion of the stopper member closing the interior hollow bore of the plug and allows for the expulsion of fluid from the said hollow bore so that when the plug

passes the constriction fluid will be sucked back into the hollow portion by force of vacuum.

Other and further objects of my invention will become apparent by referring to the drawings and reading the detailed specification which follows hereinafter.

Preferred embodiments of my invention are shown in the drawings attached hereto, in which drawings:

Fig. I is a side elevational view of a string of well casing with my specialized head attached to the upper end thereof, and with a float shoe attached to the lower end thereof, and having a stall collar intermediate the upper and lower ends thereof.

Fig. II is a side elevational view, partially sectionalized, of the preferred form of my new type fluid spacer plug.

Fig. III is a side elevational view, partially sectionalized, of a modified form of my fluid spacer plug.

Fig. IV is a side elevational view, partially sectionalized, of my specialized cementing head used with my new type plug, and showing the trip ball, primary plug, top plug and back pressure check valve releasably positioned therein, ready to start a cementing operation.

Fig. V is a cross sectional view taken along the line V—V of Fig. IV.

Fig. VI is a cross sectional view taken along the line VI—VI of Fig. IV.

Fig. VII is a fragmentary, cross sectional elevation of the upper part of the back flow check valve, cap for the cementing head, and the handle for holding, and releasing the back flow check valve in the head.

Fig. VIII is a fragmentary cross sectional elevation showing the channel on the outer side of the cementing head with the communications between same and the cementing head, provided to equalize the pressure in the cementing head above and below the top plug.

Fig. IX is a fragmentary, side elevational view, partially sectionalized, of a string of well casing with my float shoe attached to the lower end thereof and the stall collar spaced above same.

Fig. X is a fragmentary side elevational view, partially sectionalized, of a string of well pipe showing the frangible float assembly having been expelled from the casing and the primary plug and the top plug, with the back flow check valve attached thereto, spacing a quantity of cementing slurry in the well pipe.

Fig. XI is a fragmentary, side elevational view, partially sectionalized, of a string of casing showing the frangible float assembly having been expelled by the trip ball into the bore of the well, and the primary plug having been expelled into the bore of the well, and the back flow check valve having been guided and locked in place in the stall collar, and the cementing job having been completed by expelling the cement to the space between the well pipe and the outer walls of the well bore.

In the drawings, numeral references are used to designate the various parts thereof, and like numerals are used to designate like parts, and in which numeral 1 indicates a string of conventional well casing used in a well. Attached to the lower end of the well casing is a float shoe 2 of a specialized type used in my method of cementing oil wells as disclosed in my co-pending application for United States Letters Patent, Serial No. 757,452 filed on June 27, 1947.

Stall collar 3 is positioned intermediate the ends of the casing 1 at a desired place. 4 indicates a casing coupling in which the stall collar is screwed. At the upper end of the well pipe is positioned the cementing head 5, which is secured to the well casing by means of the collar 6.

The upper end of the cementing head 5 is closed by a cap 7 which is threaded into the top of the cementing head. A handle 8 is provided with a shaft passing through the cap 7 for the purpose of releasing the back pressure check valve into the well flow circuit, in the manner which will be hereinafter described in detail. The shaft for the handle 8 passes through the housing 9 and through the cap 7. The housing 9 is secured to the top of the cap 7 and has two oppositely disposed extensions thereof, which are for the purpose of limiting the rotation of the handle 8, for the purposes and in the manner which will be hereinafter described.

Positioned on the outer periphery of the cementing head 5 is a channel member 10, which is provided with communication at the upper and lower ends thereof with the interior of the cementing head 5 so that pressure may be equalized above and below the top cementing plug when positioned in the head 5. This will also be described in more detail later.

The handle 11 may be seen on the outer side of the cementing head 5 in Fig. I, which handle is provided for the purpose of releasing the primary plug into the well flow circuit at the proper time.

A trip ball receptacle 12 is provided on the outer periphery of the cementing head and has a handle 13 passing therein for the purpose of releasing the trip ball into the cementing circuit. The detailed function and operation of this mechanism will be described hereinafter.

A flow line 14 communicates with the cement mixing unit (not shown) and causes communication between such unit and the cementing head through the valved inlets to such cementing head; and the flow line 15 communicates with the well pump and permits the pumping of well mud from surface storage facilities into the cementing head through the selected valved conduit leading into the head. These valved conduits 16, 17 and 18 communicate with each other through the connecting pipes 19 and 20. A selected flow of fluid may be admitted into the casing by mere manipulation of valves on the conduits 16, 17 and 18. The flow lines 14 and 15 are connected to the pipes 19 and 20 and communicate with the valved conduit 16, 17 and 18 through the cross connections 21.

Figs. IV, V, VI, VII and VIII show the detailed construction of the specialized cementing head used with my new plug and intended for use with my "full bore cementing method" as disclosed in my co-pending application, referred to above. In these figures passage 22 connects with the valved inlet 18 by being threaded thereto through a suitable collar, and well fluid is admitted therethrough into the cementing head and pumped through the well flow circuit before the cement is admitted into the well flow circuit, for the purpose of determining whether or not there is a free flow of fluids through the well flow circuit. This conduit may also be connected to facilities for admitting a dispersing fluid for the purpose of conditioning the well mud in the well flow circuit, before admitting the cementing slurry thereto.

The trip ball 23 is shown positioned in the

ball receptacle 12 ready for releasing into the well flow circuit after or during the aforesaid circulation has been completed, for the purpose of pumping the same down to position in the frangible float assembly 95, to expel same from the well pipe to permit a free flow of fluids through the well circuit during the cementing operation. This trip ball is of conventional type and is made of a drillable material.

The trip ball receptacle 12 constitutes a cylindrical housing, which is welded to the outer periphery of the cementing head 5 and the outer end thereof is interiorly threaded to receive the threaded plug 24.

The plug 24 has a central bore or opening 25 passing therethrough, which bore is interiorly threaded to receive the plug 26. Plug 26 ordinarily closes the passage or bore 25, but it may be removed for the purpose of mounting therein a pressure gauge, which is used to record the varying pressures during a well cementing operation.

The cylindrical housing 27 is welded to the outer periphery of the ball receptacle 12 and is interiorly threaded at its outer end to receive the threaded stuffing box 28.

The stuffing box 28 has a packing element 29 at the inner end thereof, around the shaft for the handle 13, which packing element is recessed from the interior wall of the ball receptacle 12 so that the head 32, on the inner end of the handle 13, will enter said recess and will not protrude into the interior of the ball receptacle 12, when the handle 13 is pulled outward. The ball 23 is thus allowed to freely fall into the cementing head 5 when it is released by withdrawing the handle 11.

The packing element 29 is provided to prevent mud and other foreign matter from escaping from the ball receptacle 12 into the bore 30.

The bore 30 passes centrally through the packing gland 28 and is provided to admit the shaft of the handle 13 to pass through the packing gland 28 to the interior of the ball receptacle. Another packing element 31 is provided around the shaft for the handle 13 which packing element is spaced from the packing element 29.

The head 32, on the inner end of the handle 13, is of cylindrical shape and has a rounded outer surface which engages the ball 23 and holds it in the receptacle 12 until the handle 13 is pulled outward to allow the ball to fall into the cementing head in the manner which will be hereinafter described. The head 32 is larger than the bore passing through the packing 29, and the bore 30 passing through the stuffing box 28 to prevent the handle 13 from being pulled entirely from the ball receptacle 12.

The handle 13 is locked against withdrawal from ball receptacle 12, after being pushed inward to hold the ball in the receptacle 12, by a "jay" slot arrangement which is exactly the same in construction as the "jay" slot arrangement used in connection with the handle 11, which will be described in detail hereinafter.

The opening 33 is provided in the outer shell of the cementing head 5, which opening communicates with, and is connected to, the valved conduit 17, and is ordinarily used to admit the cementing slurry into the cementing head and therethrough into the casing by opening the valved conduit 17, after the primary plug 34 has been released in the manner hereinafter described.

The primary plug is hung in the cementing head by means of an eye 35, which eye is provided

with female threads in the end of the shank thereof which receive the male threads on the connector member 74 of the plug 34.

The shaft 36 of the handle 11 passes through the eye 35 and the inner tapered, enlarged end 37 thereof is inserted through the hole 38 in the side of the cementing head 5 and is received in the cylindrical housing 39. The housing 39 is welded to the outer side of the cementing head 5 over the hole 38, thus receiving and supporting the head 37 on the shaft 36.

The end 37 of the shaft 36 is enlarged and tapered outwardly so that when shaft 36 is withdrawn in the manner hereinafter described the head 37 will easily pass through the eye 35 and allow the plug 34 to be released into the well flow circuit but the head 37 is too large to permit the complete withdrawal of the shaft 36 from the head 5. The shaft 36 is free to rotate in the hole 38, so that the handle 11 may be rotated, in the manner which will hereinafter be described, to allow the withdrawal of the shaft 36 through the eye 35.

Cylindrical housing 40 is welded to the outer side of the cementing head 5 and forms a casing for the stuffing box 41. Housing 40 is interiorly threaded on its outer end to threadedly receive the stuffing box 41. A central bore 42 passes through the stuffing box 41 and receives the shaft 36 on the handle 11. The packing 43, which is recessed from the inner wall of the cementing head 5 to admit the head 37 in such recess, is provided around the shaft 36 to prevent debris from leaving the cementing head through the bore 42. Another packing element 44 is provided around the shaft 36 to further prevent debris from leaving the cementing head through the bore 42.

A horizontal slot 45 is provided in the stuffing box 40, which slot is formed by extending the bore 42 outward to the outer periphery of the stuffing box 41.

Another slot 46 is cut at right angle to the slot 45 and connects therewith a slight distance inward from the extreme end of the stuffing box 41. This forms what is commonly known as a "jay" slot.

When it is desired to pull the shaft 36 of the handle 11 outward, in order to release the plug 34 into the well flow circuit, the handle 11, which is shown in Fig. IV as being pushed inward and resting in slot 46, is turned counter-clockwise as is denoted by dotted lines in Fig. IV. The handle 11 will thus be made to register with the horizontal slot 45. Then the handle 11 may be pulled backward, and the shaft 36 thereon will slide outward through the bore 42. Thereby the end 37, of the shaft 36, is pulled outward through the eye 35, and the plug 34 is thus released into the head 5 and permitted to enter the well casing.

When hanging the plug 34 in the cementing head in the position shown in Fig. IV, the shaft 36 is inserted through the eye 35 and pushed inward, and the head 37 is inserted through the hole 38 and into the receptacle 39. The handle 11 is turned clockwise when it comes in register with the slot 46, thus locking it in place and preventing the outward movement thereof until the handle 11 is again turned counter-clockwise to cause it to match with the slot 45.

This "jay" slot arrangement, described in detail above, for locking the handle 11 against withdrawal is exactly the same in construction

as the "jay" slot arrangement provided for locking the handle 13 against withdrawal.

The passage 47 which is defined by a hollow cylindrical member welded to the exterior of the cementing head 5, leads into, and communicates with, the interior of the cementing head 5 and is connected with, and communicates with, valved conduit 16, through which well mud may be flowed into head 5 and therethrough into the casing, after releasing the top plug 48 with the back pressure check valve 49 attached thereto.

Back pressure check valve 49 is provided with a central bore in the bottom thereof with female threads therein (not shown) which are adapted to receive the male threaded connector member 74 provided on upper end of the plug 48. The plug 48 is connected with the back pressure check valve 49 so that they will travel together through the casing string, and the back pressure check valve 49 will be conveyed by plug 48 to a seated position in the stall collar 3.

Back pressure check valve 49 is provided with a spring loaded split ring 50 which is adapted to be contracted into a recess on the body of the back pressure check valve 49 when force is applied to the outer periphery of the said ring. Such a force is applied to said ring when the lower end of valve 49 is forced through the inner tube 51 in the stall collar 3. When pressure is released from the said ring, upon passing below the inner tube 51, it will relax by spring action behind a shoulder on the lower side of the inner tube 51.

The back pressure check valve is also provided with resilient packing rings 52, extending around the body thereof, which seal against the inner sides of the inner tube 51 when the back pressure check valve is locked in position in the stall collar 3.

A taper 53 is provided on the upper end of the back pressure check valve 49 which mates with the inner taper or valve seat 54 in the upper end of the inner tube 51, and stops the progress of the back pressure check valve in the casing when the said taper 53 is seated in the valve seat 54. Thus the pumps, which are circulating the fluid in the well circuit, are stalled, and the flow of fluids upwardly and downwardly in the casing string and behind the casing, is immediately stopped, since the back pressure check valve 53 may not move downwardly, and it may not move upwardly by virtue of the split ring 50 being locked behind the shoulder on the lower side of the inner tube 51.

The vertical slots 64 are cut on the opposite sides of the top of the valve member 49; and a horizontal slot 55 is cut at right angles to and communicates with each slot 64. The slots 55 are cut in opposite directions.

The shaft 56, which has an upper enlarged portion to fit the housing 9, is attached to the handle 8 and rotatively extends through the housing 9 and through the cap 7, and is provided with a tapered mating member 57 on the lower end thereof.

The top of the valve body 49 is provided centrally with a tapered bore 58, which is adapted to match, and rotatably receive the mating member 57. The mating member 57 has horizontally disposed pins 59 extending from the outer sides thereof; and the cap 7 has a pair of vertically disposed pins 60 disposed on the under side thereof and oppositely disposed to each other. Each of the pins 60 is adapted to fit into a slot 61 in the top of the back pressure check valve 49.

When mounting the spacer plugs and back pressure check valve in the cementing head 5 the back pressure check valve 49, with top plug 48 attached thereto, is attached in locked position to the cap 7 before the cap 7 is placed in the top of the head. This is done by inserting the member 57 into the female mating member 58 in position so that the pins 60 on the bottom of the cap 7 will match with and be inserted in the slots 61 in the top of the back pressure check valve; and the horizontally disposed pins 59, on the mating member 57, are made to match with and are inserted in, the vertical slots 54. The handle 8 is then rotated counter-clockwise so that the pins 59 will enter the horizontally disposed slots 55.

A hole 62 is provided through the upper enlarged portion of shaft 56, and a hole (not shown) is provided through the housing 9, which hole is adapted to match with the hole 62 when the handle 8 is rotated counter-clockwise. When the holes are thus matched, the pin 63 may be inserted through the said holes, thus locking the shaft 56 and preventing it from rotation until the pin 63 is withdrawn to permit clockwise rotation. Thus the top cementing plug, attached to the back pressure check valve, is locked in stationary position in the cementing head. The pins 60, in aligned position in the slots 61, prevent the rotation of the back pressure check valve 49 about its vertical axis. When the pin 63 is withdrawn and the handle 8 is rotated in a clockwise direction, the pins 59 also rotate clockwise in the horizontal slots 55 to match the pins 59 with the vertical slots 64, and allow the back pressure check valve to be released from the cap 7.

Suitable packing 65 is provided around the shaft 8 where it passes through the cap 7.

The housing 9 is provided with extensions on the upper end thereof which are oppositely disposed and limit the rotation of the handle 8. The maximum rotation of handle 8 in counter-clockwise direction supplies alignment to hole 62 through shaft 56 with the hole (not shown) in housing 9, and the maximum rotation of handle 8 in clockwise direction supplies alignment of pins 59 and the vertical slots 54 of the back pressure check valve 49.

The cap 7 has a skirt or extension 67 thereon which is provided with exterior threads on the lower side thereof and is secured in the cementing head 5 by threading same into correspondingly matching female threads in the top of the cementing head 5. The skirt 67 is provided with a resilient packing 68 around the lower side thereof.

As described above, the back pressure check valve is locked in position on the under side of the cap 7 before the cap is screwed into the top of the cementing head. Then, when it is desired to release the back pressure check valve, with the plug 48 attached thereto, into the well cementing circuit, at the proper interval, it is only necessary to withdraw the pin 63, turn the handle 8 in a clockwise direction, disengage the pin 59 from the slot 55, and allow the back pressure check valve and the plug attached thereto to freely fall, and be pressured into, the well flow circuit.

The housing or channel member 10 is welded to the outer side of the cementing head 5 and provides a chamber therein. A hole 99 is provided through the cementing head near the upper end of said channel; and a hole 100 is pro-

vided through the outer wall of the cementing head 5 near the lower end of said channel. Thus communication is provided between the upper and lower ends of the top plug 48 through channel 10, when said plug is positioned in the cementing head, for the purpose of equalizing whatever force is present inside the cementing head above and below the top plug at all times, and allows the plug 48 to be held in equilibrium before being released into the well flow circuit.

The preferred form of my new cementing plug, which may be either the primary plug 34 or the top plug 48, is shown in detail in Fig. II.

This plug has a sealing face 69 thereon, which sealing face has a long continuing contact with the bore walls of the casing, by frictional engagement therewith, upon its movement through the casing bore. An outwardly diverging lip 70 is provided on the upper outer side of the plug and a lower outwardly diverging lip 71 is provided on the lower outer side of the plug. These lips 70 and 71 are not in the same plane with the sealing face 69, but are brought into the same plane therewith when pressure is applied to the plug and it is contracted and elongated in frictional engagement with the bore walls of the casing. After the plug is so contracted and elongated by pressure, the outer periphery of the plug, including the outer side of the sealing face 69 and the outer sides of the lips 70 and 71, form one continuous straight line in frictional engagement with the bore of the casing. These lips, 70 and 71, are provided to assure tight frictional engagement by the outer face of the plug with the inner bore of the casing, even though the outer face of the plug may be worn away by friction when forced through the casing bore.

The plug has a hollow bore 72 therein which is open at one end and is closed at the other end by the connector member 74. The open end of the bore 72 is adapted to be closed by a stopper 73 which may be made of any suitable material such as cork, aluminum, or any other drillable material. This stopper is inserted and held in the opening to bore 72 by frictional engagement with the interior walls thereof.

The threaded joinder member 74, which is made of metal of a drillable nature, such as aluminum or the like, has a lower end portion 75 which is hour glass shaped, that is, the middle portion is less in diameter than the upper and lower portion thereof, and is tapered from the center outward toward both ends, and the outer periphery thereof has steps or waves therein. This lower end portion is molded into the upper cylindrical extension 76 of the rubber plug at the time the plug is made and the shape thereof, with the upper and lower ends of larger diameter than the middle thereof, and with the steps thereon, prevent the connector member 74 from being pulled from the plug.

A baffle 77 is provided which extends continuously around the plug and the upper face thereof connects the inner surface 78 of the sealing face 69 and the upper cylindrical portion 76.

A series of spaced upper webs 79 are provided around the upper end of the plug. These upper webs connect the baffle 77, cylindrical extension 76 and the inner face 78. It will be noted that the upper ends of the webs 79 do not come to the outer end of the cylindrical member 76 and the lower ends thereof do not extend to the top of the inner side 78 of the outer face 69. There are a plurality of these webs 79 disposed at spaced intervals around the top of the plug, and these webs, together with the cylindrical member 76, the upper side of the baffle 77 and the inner face 78 of the sealing face 69, define a series of spaced interstices 80 around the upper end of the plug.

The outer sides of the hollow interior 72 of the plug forms a lower cylindrical member 83. The inner side of the lower extension 82 of the sealing face 69 is connected to the lower cylindrical member 83 by the lower side 81 of the baffle 77.

A series of lower webs 84 are provided at spaced intervals around the lower end of the plug. These webs connect the outer surface of the cylindrical member 83, the lower edge 81 of the baffle 77, and the inner side of the lower extension 82 of the sealing face 69. These webs 84, the baffle 77, the inner surface 82 of the sealing face and the outer surface of the lower cylindrical member 83, define a series of spaced interstices 85 around the lower end of the plug.

This fluid spacer plug has the attribute and capability of being easily deformed when pressure is exerted thereagainst. At the same time, it has the attributes of a solid when it is submerged in a non-compressible fluid, or nearly so non-compressible fluid, and pressure is exerted thereagainst. This is so because the hollow interior of the plug is filled with fluid and the interstices 80 and 85 are filled with fluid; and when the plug is deformed and elongated by pressure fluid is expelled from this hollow interior and the interstices; and when pressure is released therefrom the plug reforms and relaxes and fluid is drawn back into the interstices and the hollow interior by force of suction. The plug is maintained in a rigid state at all times while under pressure and moving in the well flow circuit during a cementing operation.

Frictional engagement with the bore walls of the casing is provided by the outer sealing face of the plug, and by the sealing lips thereon, when the plug is deformed and elongated by pressured movement through a bore of smaller diameter than the plug. This plug is made of larger diameter than the bore of the casing in which it is used and is thus elongated into frictional engagement with the bore walls of the casing as it moves in the bore.

Fluid is prevented from passing around the plug and none passes through it. The hollow bore and the interstices of the plug are filled with fluid while the plug is moving in a casing bore and separate and define two different columns of fluid therein.

The elongated, unbroken and continuous outer face of the plug provides stability and keeps it from wobbling while moving through the casing bore. This capability is not found in any plug presently used in cementing operations.

The interstices of the upper and lower ends of the plug allow the plug to be more easily deformed and elongated for passage through a casing bore of smaller diameter than the plug, or through a restricted area in the casing bore, while at the same time such interstices lend rigidity to the plug by confining within the plug the forces encountered by it.

A modified form of my cementing plug is shown in Fig. III wherein the outer sealing face 69 and the upper and lower lips 70 and 71 are the same in construction as in the preferred form hereinbefore described; and the upper cylindrical member 76 and connector member 74, with extension 75 thereon, and the hollow interior 72

are the same in construction as that described above in reference to the preferred form of my plug.

In this modified form a series of upper interstices 86 are formed about the top of the plug.

A plurality of upper peripheral skirts 87 extend outwardly from the baffle 88. A series of spaced upper webs 89 are positioned diagonally across the peripheral skirts 87 and connect them together. An upper interstice 86 is defined by the innermost peripheral skirt 87, two webs 89, baffle 88, and the cylindrical member 76, and there are a series of these interstices around the periphery of the upper side of the plug adjacent to the cylindrical member 76. There are also a series of these interstices 86, extending around the upper end of the plug, each of which interstices is defined by oppositely disposed walls of two peripheral skirts, a web member 89 on each side thereof and the baffle 88 forming the bottom thereof. The outer series of spaced interstices 86 around the upper end of the plug, are defined by a peripheral skirt 87, the inner side of the sealing face 69, two web members 89, and the baffle 88.

A plurality of lower cylindrical skirts 91 are positioned around the lower end of the plug which, with the web connecting members 92 and the baffle 88, form a plurality of lower interstices 90 around the lower end of the plug. These interstices are formed in the same manner as was described above in reference to the upper interstices.

This modified form of plug has the same function and advantages as the preferred form described above, in that it has a hollow bore, an elongated sealing face, and spaced interstices around the upper and lower ends thereof, with an expellable stopper member 73 to close the bore 72 therein. It is easily deformed and reformed and has the attributes of a solid when submerged under pressure.

The operation and function of my new type of fluid segregating plug with the special head designed therefor may be stated as follows:

Ordinarily the cementing head 5 with the trip ball, primary plug and secondary plug with the back flow check valve attached thereto, is assembled on the derrick floor before the head is attached to the string of casing which has already been run into the hole.

Of course, before running the string of casing into the hole, prior to the cementing operation, the frangible float assembly 95 has been placed in the float shoe 2 and is held therein by the shear screws 96. This float assembly allows for the floating of the string of casing progressively into the hole.

The stall collar 3 is also placed at the desired point in the string of casing.

The ball 23 may be placed within the receptacle 12 by removing the cap 24 and placing the ball in the receptacle against the rounded head 32 on the handle 13; or it may be placed in the receptacle by pushing it upward through the bottom of the cementing head before it is positioned on the casing and engaging it by the head 32 to hold it therein.

A primary plug 34 is hung in the cementing head 5 by threading the shaft 36 through eye 35 and inserting the head 37 in the receptacle 39 in the manner hereinbefore described; and the plug 48 with the back flow check valve 49 attached thereto is engaged to the cap 7 and the cap screwed into the top of the cementing head in the manner hereinbefore described.

Before positioning the primary and top plugs in the cementing head, the bores 72 therein are filled with fluid and stoppers 73 are inserted to close the bores to retain the fluid therein.

The cementing head is then placed on the upper end of the string of casing and held thereto by the collar 6.

It will be noted that the interior portion of the cementing head is smaller in diameter than the interior bore of the casing string 1 at the place where the cementing head 5 is joined onto the casing.

After the head 5 has been thus positioned on the casing, with the accessories therein, the valved inlet 18 is opened to allow the well mud to be pumped through the casing and up behind the casing to return to the surface storage facilities. After the well has been thus circulated satisfactorily to assure that there is an open well flow circuit, the trip ball 23 is released into the casing by disengaging the handle 13 and pulling it outward and thus allowing the trip ball to fall by gravity into the casing bore. The trip ball is then pumped downward until it comes to rest in the valve seat 102 in the float assembly 95. Sufficient pressure is then applied thereto by the surface pumps to shear the screws 96 and eject the float assembly 95 from the casing. A substantially free flowing casing bore is then provided for the pumping of fluids into the well flow circuit.

Further circulation is usually carried on through the well bore after the float assembly is ejected from the lower end of the casing, before releasing the plug 34 into the well flow circuit.

At the desired time the plug 34 is disengaged in the head 5 by turning the handle 11 counterclockwise and pulling it outward to release the eye 35 from the shaft 36 in the manner hereinbefore described.

After plug 34 has been thus released, the valved inlet 18, through which the well fluid has been pumped, is closed and another valved inlet 17 is opened to allow cementing slurry to be admitted into the cementing head and therethrough into the casing behind the primary plug 34.

The primary plug 34, being larger in outside diameter than the restricted opening 101, will be deformed and elongated in its pressured passage through such restricted opening, and in such process the stopper 73 is ejected from the lower end of the plug and the fluid in the interior 72 thereof is partially expelled. The plug, while passing through the restricted opening 101 is made smaller in diameter than the interior diameter of the casing, and upon entering the casing will relax to the contours of the interior of the casing and the outer walls and lips of said plug will form tight frictional engagement with the inner walls of the casing.

Since the plug forms a tight frictional engagement with the inner walls of the casing and since it has the attributes of a solid, no fluid can by-pass it or pass through it, and thus the cementing slurry admitted behind it is perfectly segregated from the mud column ahead of it.

After the cementing slurry has been admitted into the casing, the plug 48, with the back flow check valve 49 attached thereto is released into the cementing head in the manner hereinbefore described.

The plug 48 is forced through the constricted opening 101 and reacts exactly the same way that

the plug **34** reacted when forced therethrough, and is admitted into the casing carrying therewith the back pressure check valve **49**.

The plug **48** acts both as a spacer plug to space the column of mud which follows it from the column of cementing slurry which precedes it, and as a conveyor to carry the back flow check valve **49** to the place of seating in the stall collar.

After the plug **48** and back flow check valve **49** have been released from their locked position in the cementing head the cementing slurry conduit **17** is closed and another of the valved conduits, entering the head, is opened to allow well mud to enter the head and therethrough to enter the casing.

The slurry, which is indicated by the numeral **97**, and the well mud, indicated by **98**, are then pumped downward in the casing and upward outside of the casing until the backflow check valve **49** comes to rest in the stall collar **3**. The pumps are then stalled and the operator then knows that the cementing job has been completed. He then releases the pressure from the surface pumps and the backflow check valve **49** is prevented from moving upward in the casing by virtue of the split ring **50** being engaged under the shoulder on the lower side of the inner tube **51**, and is prevented from moving downward because the upper side thereof is seated in the taper **54** provided on the upper end of the inner tube **51**.

During this procedure the plug **34** has been ejected into the bottom of the well bore **94**.

The plug **34**, the ball **23**, the float assembly **95** and the stopper **73** are all made of material which may be penetrated and broken up by the drill bit should such ensuing procedure be required for bore hole deepening.

Any one of my plugs may be made and operated with perfectly straight side walls, having no lips, flanges, corrugations or other breaks.

It is to be understood that other and further modifications and forms of my invention may be devised and still remain within the spirit and scope of the appended claims.

I claim:

1. A fluid segregating plug comprising, a substantially cylindrical body of elastic material said plug having a central core portion, an outer wall, and a plurality of web members spaced about the end faces of the plug, said webs connecting the core and the outer wall, thereby forming a plurality of open recesses arranged through the end faces of the plug, the outer walls of said plug being adapted to conform to the inner surface of a conduit throughout the entire length of such walls.

2. A fluid segregating plug comprising, a cylindrical body made of elastic material and having an elongated outer face adapted to conform to the inner surface of a conduit, said plug having a hollow interior, said hollow interior being permanently closed at one end, and adapted to be closed at the other end by a removable member; a plurality of open compartments spaced about the upper end of the body; and a plurality of open compartments spaced about the lower end of the body.

3. A fluid segregating plug comprising, a cylindrical body made of elastic material, said body having an elongated outer face adapted to conform to the inner surface of a conduit, and having a hollow interior portion; a connector member closing one end of said hollow interior portion, and the other end of said hollow interior portion being adapted to be closed by a removable member; a plurality of open compartments spaced about the upper end of the body; and a plurality of open compartments spaced about the lower end of the body.

4. A fluid segregating plug comprising, a cylindrical body made of elastic material with an elongated outer face thereon adapted to conform to the inner surface of a conduit, said plug having a hollow interior; a connector member closing one end thereof; and a removable member closing the other end thereof, the hollow interior confining a body of fluid; a plurality of open compartments spaced about the upper end of the body; and a plurality of open compartments spaced about the lower end of the body.

5. A fluid segregating plug comprising, a cylindrical body made of elastic material, said body having an elongated outer wall thereon adapted to conform to the inner surface of a conduit a central core portion; a plurality of webs spaced about the upper face of the plug, and connecting the core with the outer wall thereof, thereby forming a plurality of spaced interstices around the upper end of said cylindrical body; a plurality of webs spaced about the lower face of the plug, and connecting the core with outer wall thereof, thereby forming a plurality of spaced interstices around the lower end of said body; and a partition separating said upper and lower interstices.

6. A fluid segregating plug comprising, a cylindrical body made of elastic material having an elongated outer wall adapted to conform to the inner surface of a conduit; an inner cylindrical member centrally spaced from the said wall; a plurality of web members spaced about the upper and lower ends of said body and spacing said inner cylindrical member from said wall thereby forming a plurality of spaced compartments on the upper and lower ends of the plug; and a baffle member extending between said inner cylindrical member and said wall, thereby forming a partition between the said upper and lower compartments.

7. A fluid segregating plug comprising a cylindrical body made of elastic material; an elongated outer face provided on said body and adapted to conform to the inner surface of a conduit; an inner cylindrical member centrally spaced from the inner surface of said outer face; a series of webs peripherally spaced on the upper and lower ends of said cylindrical body, and spacing said inner cylindrical member from the inner side of said outer face; a baffle member extending around the inner cylindrical body and connecting same with the inner face of the said outer face of the said plug, and separating said upper and lower webs; a connector member attached to one end of said inner cylindrical body, whereby the said plug may be connected to another member for the purpose of conveying said other member through a conduit.

8. A fluid segregating plug comprising, a cylindrical body made of elastic material; an elongated outer face on said body adapted to conform to the inner surface of a conduit; an inner cylindrical member centrally spaced from the inner side of said outer face; a series of webs on the upper and lower ends of said cylindrical body and spacing said inner cylindrical member from the inner surface of the said outer face; a baffle member extending around the inner cylindrical body and connecting same with the inner side of the outer face of the said plug and also forming a partition between said upper and lower webs; a hollow interior being provided in said inner cylindrical portion, said hollow interior be-

ing closed at one end by a connector member and open at the other end and adapted to be closed by an expellable member.

SYLVESTER B. SCHNITTER.

References Cited in the file of this patent

UNITED STATES PATENTS

Number	Name	Date
1,662,311	Hamer	Mar. 13, 1928
1,791,874	Rodgers	Feb. 10, 1931
1,803,126	Oberhuber	Apr. 28, 1931
1,882,099	Trouth	Oct. 11, 1932
1,994,072	Hardcastle	Mar. 12, 1935

Number	Name	Date
2,106,996	Edwards	Feb. 1, 1938
2,165,433	Wickersham	July 11, 1939
2,186,230	Bald	Jan. 9, 1940
2,257,784	Brown	Oct. 7, 1941
2,277,501	Murray	Mar. 24, 1942
2,277,510	Courter	Mar. 24, 1942
2,352,412	Sandstone	June 27, 1944
2,416,842	O'Leary	Mar. 4, 1947
2,481,422	Haynes et al.	Sept. 6, 1949
2,509,922	Hall	May 30, 1950
2,529,027	Lamb	Nov. 7, 1950
2,599,386	Haynes	June 3, 1952