Feb. 8, 1955 F. B. MORRILL 2,701,717

APPARATUS FOR CONVEYING FABRICS AND THE LIKE

Filed Nov. 10, 1949 5 Sheets-Sheet 1

Fig. 1.

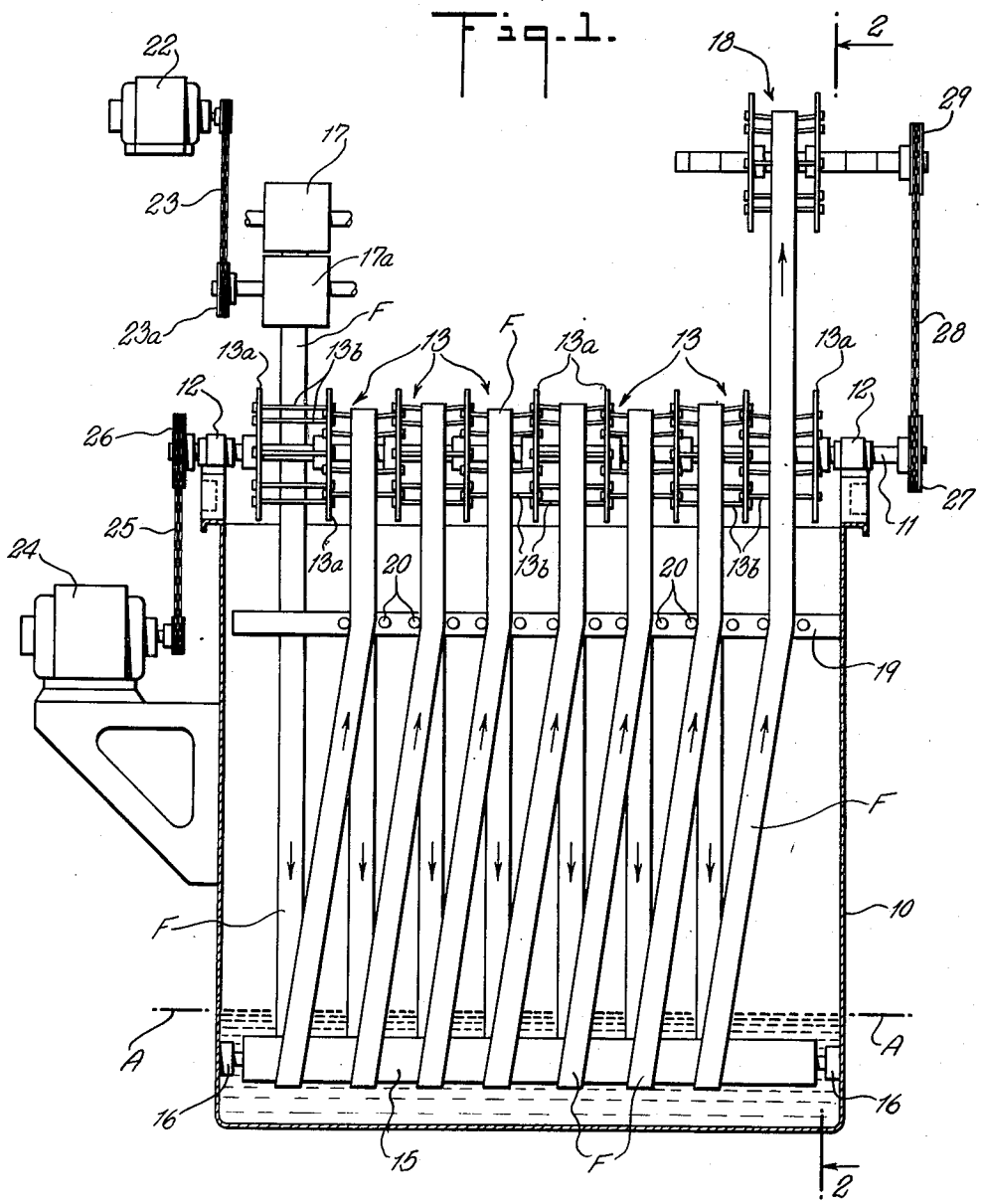

INVENTOR.
FRANK B. MORRILL
BY
Davis, Hoxie & Faithfull
ATTORNEYS

Feb. 8, 1955 F. B. MORRILL 2,701,717

APPARATUS FOR CONVEYING FABRICS AND THE LIKE

Filed Nov. 10, 1949 5 Sheets-Sheet 2

Fig. 2.

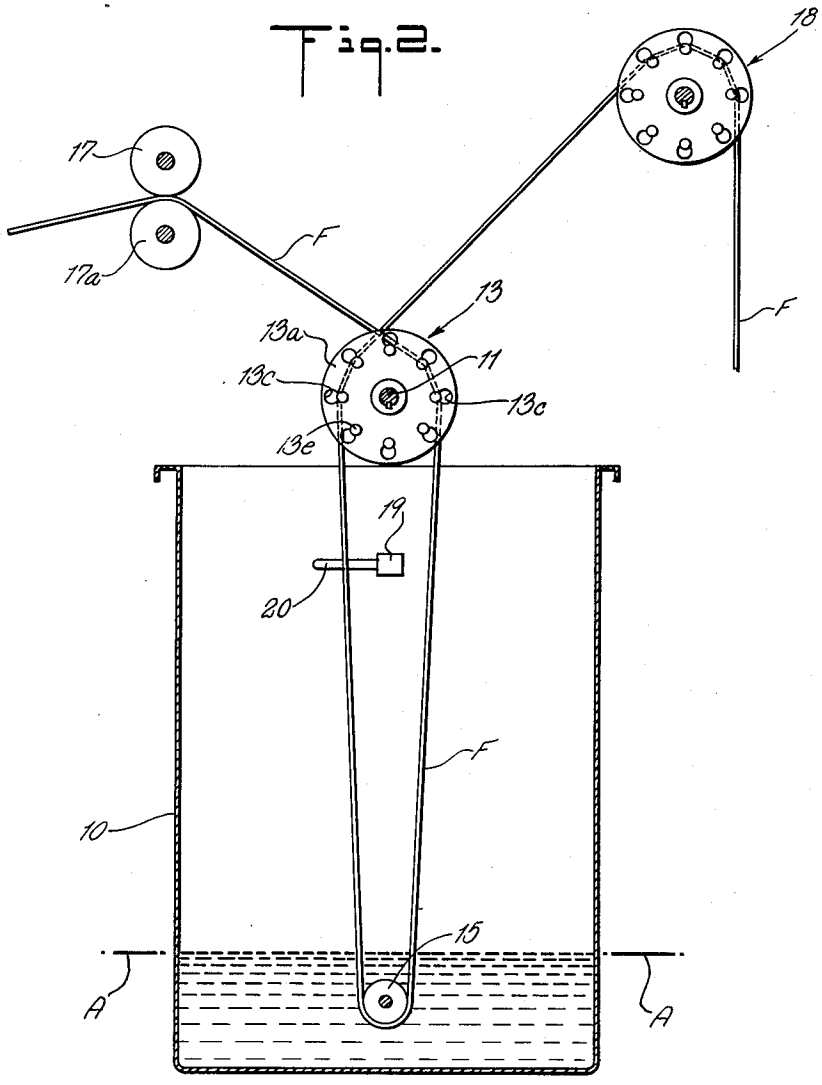

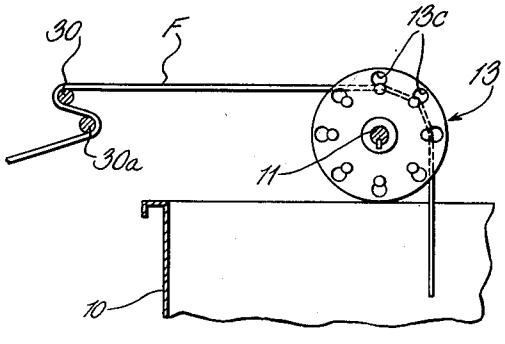

Fig. 5.

INVENTOR.
FRANK B. MORRILL
BY
Dwers, Hopkins & Faithfull
ATTORNEYS

Feb. 8, 1955 F. B. MORRILL 2,701,717

APPARATUS FOR CONVEYING FABRICS AND THE LIKE

Filed Nov. 10, 1949 5 Sheets-Sheet 3

Fig. 3.

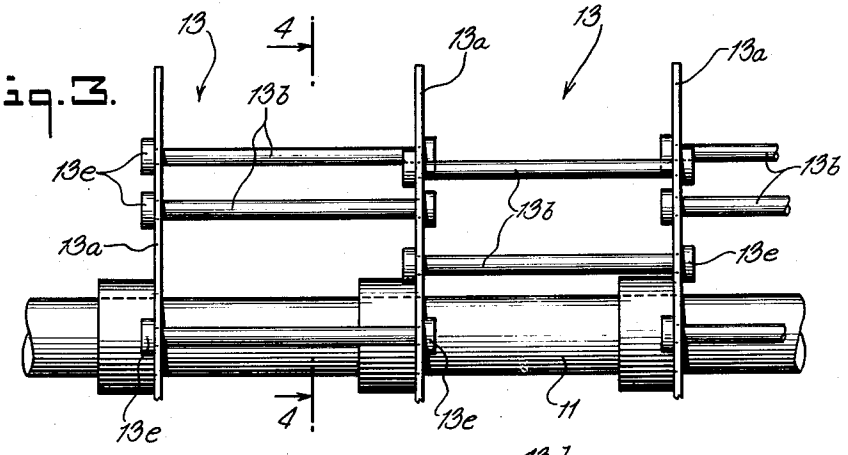

Fig. 4.

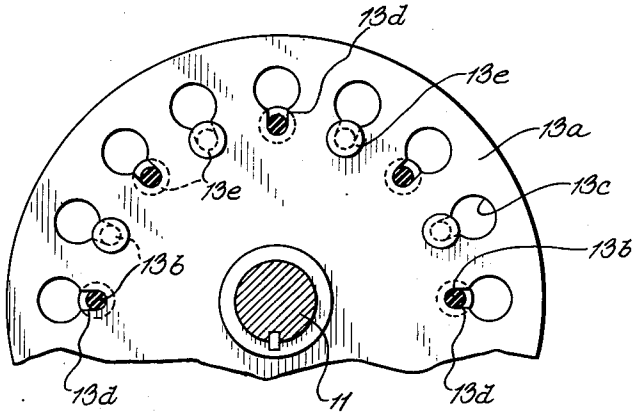

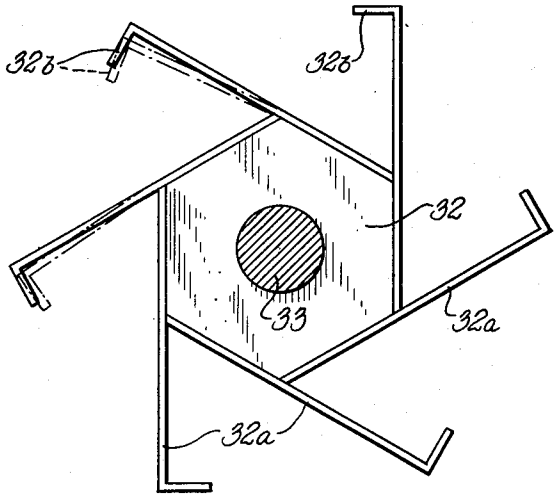

Fig. 8.

INVENTOR.
FRANK B. MORRILL
BY
Davis, Hoxie, Faithfull
ATTORNEYS

Feb. 8, 1955 F. B. MORRILL 2,701,717

APPARATUS FOR CONVEYING FABRICS AND THE LIKE

Filed Nov. 10, 1949 5 Sheets-Sheet 4

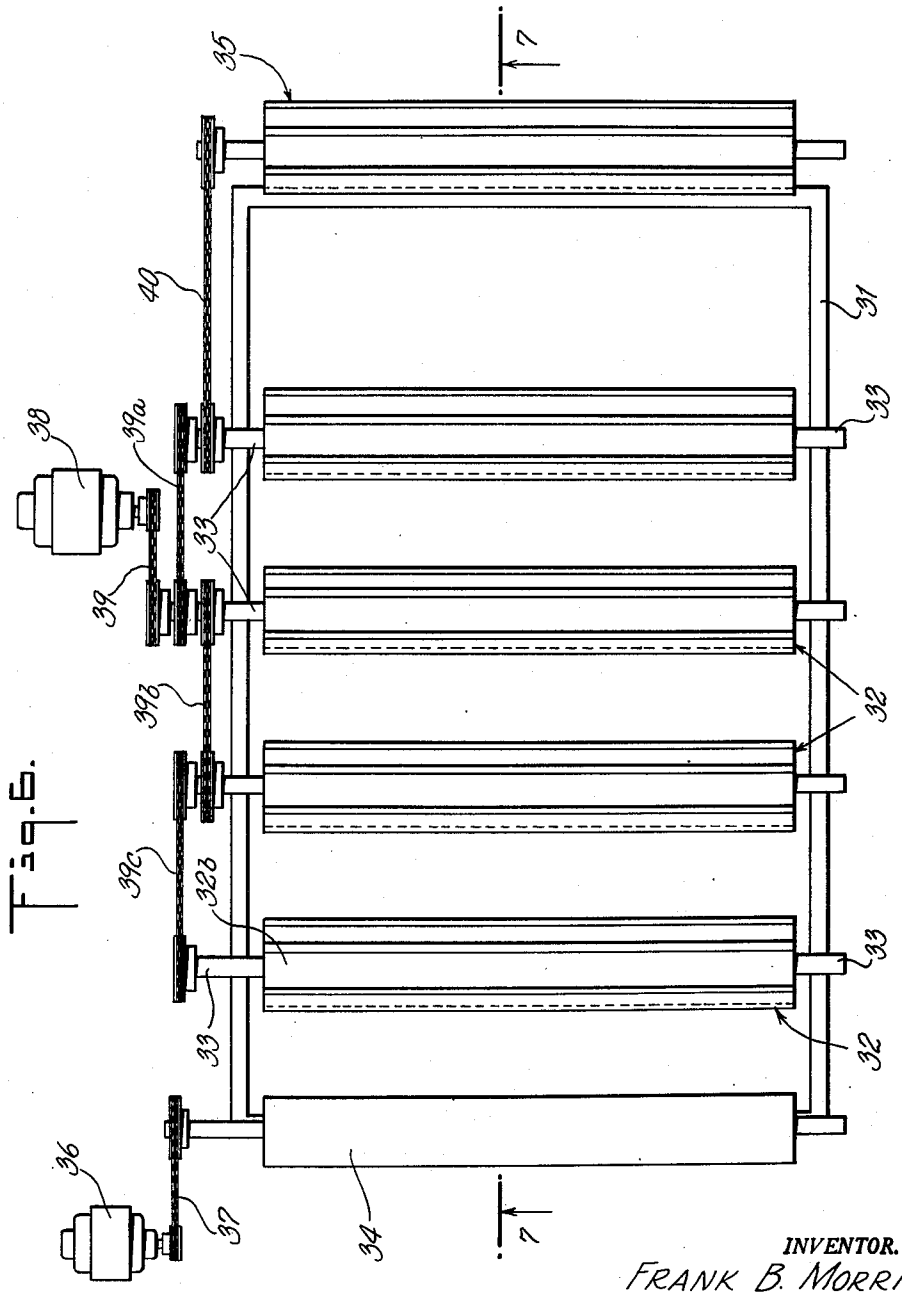

Fig. 6.

INVENTOR.
FRANK B. MORRILL
BY
Davis, Hoxie & Faithfull
ATTORNEYS

Feb. 8, 1955 F. B. MORRILL 2,701,717

APPARATUS FOR CONVEYING FABRICS AND THE LIKE

Filed Nov. 10, 1949 5 Sheets-Sheet 5

Fig. 7.

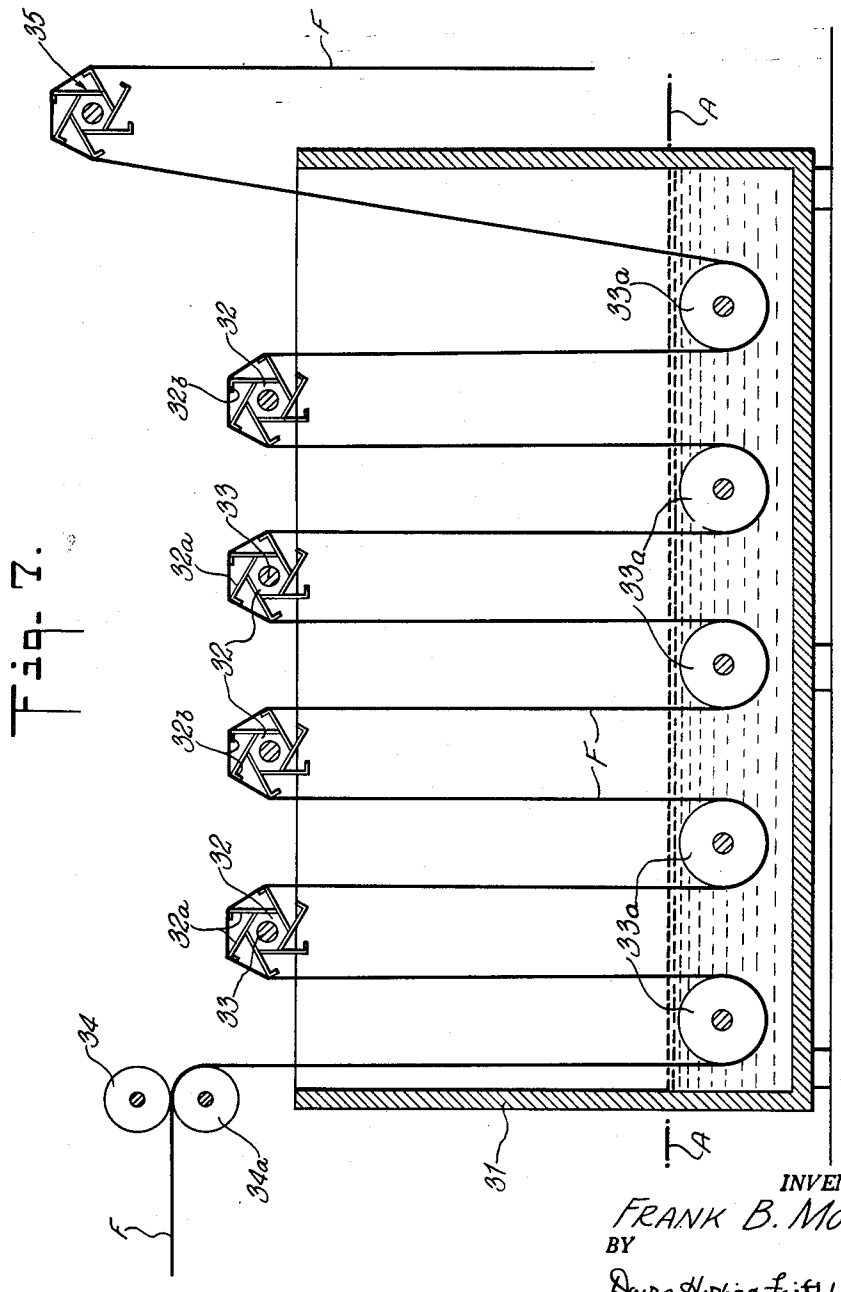

INVENTOR.
FRANK B. MORRILL
BY
Davis, Hoxie & Faithfull
ATTORNEYS

United States Patent Office 2,701,717
Patented Feb. 8, 1955

2,701,717

APPARATUS FOR CONVEYING FABRICS AND THE LIKE

Frank B. Morrill, North Adams, Mass., assignor to James Hunter Machine Company, North Adams, Mass., a corporation of Massachusetts

Application November 10, 1949, Serial No. 126,463

3 Claims. (Cl. 271—2.3)

This invention relates to transporting materials lengthwise in web or rope form under conditions which tend to change their length, as in processing the materials. More particularly, the invention relates to an improved apparatus for transporting such materials lengthwise while maintaining the material tension substantially constant.

The invention will be described, by way of example, in connection with the processing of fabrics, since the transporting of fabrics in process has heretofore entailed considerable difficulty due to shrinking or stretching of the fabric by the processing fluid. It will be understood, however, that the invention is not confined to the transporting of fabrics.

In the commercial processing of fabrics, they are usually subjected to a number of treatments, such as washing, dyeing, bleaching, drying, and the like. To meet the demands of modern production techniques, it is desirable to move a web or rope of the fabric continuously at high speed through a container where it is subjected to the treating fluid, which may be in liquid or gaseous form. Accordingly, it has been proposed to pass the fabric web or rope over a series of upper and lower rolls as it moves through the fluid container, the fabric being pulled through the container by nip rolls at the outlet end of the container. However, the handling of fabrics in this manner has presented a serious problem because the changes in length of the fabric, due to shrinking or stretching by the fluid action, tend to cause wide variations in the tension of the fabric moving over the rolls, and the tension may become sufficient to damage the fabric. As the fabric progresses through the fluid container, there is generally considerable variation in the rate (and sometimes even in the direction) of change in its length due to the fluid, and the problem is further aggravated by the fact that different fabrics will react differently to the fluid, in regard to the amount and rate of shrinking or stretching.

It has been attempted heretofore, in various ways, to prevent the tension from becoming great enough to harm the fabric as it is moved through the fluid. For example, the upper or lower rolls, or both, have been driven at about the same peripheral speed as the nip rolls, or the lower rolls have been driven as a substantially greater peripheral speed than the nip rolls. Also, efforts have been made to compensate for excessive tension by using movable rolls which shift from one location to another upon change in tension. The results of these attempts have left much to be desired, largely because they fail to meet one or more of the requirements that (1) the system should be capable of handling different types of fabrics, from the delicate ones to the strong ones; (2) compensation should be provided for both general and local changes in length or tension and for different rates of local change, to prevent excessive tension at any point; (3) the fabric should be moved smoothly and evenly through the fluid and at high speed, if desired; and (4) the system should be free of complicated devices.

The present invention, therefore, has for its principal object the provision of an improved apparatus for transporting fabrics lengthwise and which fulfills these requirements more completely than has been possible heretofore.

Another object is to provide an improved apparatus of the character described, in which the fabric tension is maintained substantially uniform throughout all parts of the fabric being transported, regardless of variations in the amount or rate of stretching or shrinking at different parts of the fabric.

A further object is to provide an improved apparatus of the character described which is of simple construction and readily adjustable to vary the operating tension on the fabric, such tension otherwise being maintained substantially constant.

An apparatus made according to the invention comprises a resilient transport roll having a yieldable periphery engaging the fabric to move it continuously from a fabric supply point to a fabric delivery point, the roll being rotatable about a fixed axis to transport the fabric partly around the axis on its way to the delivery point. The resilient roll is driven at a contsant angular speed but is deformable at its periphery from a maximum radius to a minimum radius by tension in the fabric, whereby the peripheral speed of the roll varies inversely with the fabric tension. This characteristic of the roll is preferably provided by elastic members extending across a circumferential groove in the roll and forming the fabric-engaging periphery, or by spring fingers mounted on the roll with their free ends forming the periphery. The resilient transport roll coacts with means for feeding the fabric from the supply point to the roll at a linear speed less than the peripheral speed of the roll at its maximum radius but greater than the peripheral speed of the roll at its minimum radius. Consequently, the fabrdic is normally maintained under a relatively small tension as it passes between the feeding means and the transport roll, this normal tension being of a magnitude sufficient only to compress the roll radius to the point where its peripheral speed is equal to the linear speed at which the fabric is fed by the feeding means. However, if the fabric should stretch and thereby tend to relieve its tension as it moves between the feeding means and the transport roll, the resilient periphery of the roll will increase in radius and therefore in peripheral speed, so as to maintain the tension substantially constant; and, conversely, if the fabric should shrink and thereby tend to increase its tension as it moves between the feeding means and the transport roll, the radius and therefore the peripheral speed of the roll will decrease so as to maintain a substantially constant tension.

When the fabric is to be moved continuously through a treating fluid in a container, the apparatus in its preferred form comprises a series of resilient transport rolls, each having a yielding periphery for transporting the fabric partly around the roll axis as previously described; and the fabric is arranged to extend from one roll to the next roll by way of an intermediate guide roller, so that the fabric passes through the fluid in a series of loops on the rolls. The transport rolls are driven at a constant angular speed which is such that the peripheral speed of each transport roll at maximum radius is greater but at minimum radius is less than the linear speed at which the fabric is fed from the feeding means to the first transport roll, thereby providing the normal tension previously mentioned. Since each transport roll is variable in radius independently of the others, any local stretching or shrinking of the fabric as it passes between any transport roll and a guide roller will be quickly counteracted by a change in the roll radius and peripheral speed, without impairing the ability of the other rolls to self-adjust their radii and peripheral speeds in accordance with tension changes in other parts of the fabric. Thus, if the fabric should undergo, for example, first a sudden shrinking and then a gradual stretching as it progresses through the fluid container, the resilient roll or rolls first engaging the fabric will be deformed to a subnormal radius approaching the minimum radius, while the radii of the subsequent rolls will increase from this subnormal radius, in steps from one roll to the next. The normal tension in the fabric may be adjusted by varying the angular speed at which the resilient rolls are driven, relative to the linear feeding speed of the fabric.

For a better understanding of the invention, reference may be had to the accompanying drawings, in which

Fig. 1 is a vertical sectional view of one form of the new apparatus, showing part of the apparatus schematically;

Fig. 2 is a sectional view on the line 2—2 of Fig. 1;

Fig. 3 is an enlarged front view of the resilient rolls illustrated in Figs. 1 and 2;

Fig. 4 is a sectional view on the line 4—4 in Fig. 3;

Fig. 5 is a schematic view of part of the apparatus, illustrating a modified form of the feeding means for the fabric;

Fig. 6 is a plan view of another form of the apparatus;

Fig. 7 is a sectional view on the line 7—7 in Fig. 6; and

Fig. 8 is an enlarged sectional view of one of the resilient rolls illustrated in Figs. 6 and 7.

Referring to Figs. 1 through 4, the apparatus as there shown is arranged to feed the fabric F continuously through a container **10** which is filled with water or other liquid to a level A, to wash or otherwise treat the fabric. A shaft **11** extends across the open top of the container and is rotatably mounted in bearings **12** at opposite sides of the container. The shaft **11** is provided with a series of resilient rolls **13** which rotate with the shaft. Each roll **13** includes a pair of axially spaced flanges **13***a*, which are rigid, fixed to the shaft to form a circumferential groove around the shaft, and circumferentially spaced members **13***b* of rubber or other elastic material extending across the groove between the flanges **13***a*. The flanges **13***a* are each provided with a series of circumferentially spaced key-shaped openings, the outer parts **13***c* of which are substantially larger than the inner parts **13***d* (Fig. 4). The elastic members have at each end a head **13***e* small enough to be inserted through the outer part **13***c* of an opening but larger than the inner part **13***d*, which receives the narrow or shank part of the member **13***b*. Thus, the elastic members can be readily assembled on the flanges so that each member extends through the smaller parts **13***d* of opposed openings in a pair of adjacent flanges, where they are held under an initial tension by the heads **13***e* outside the openings. Each of the flanges **13***a* between the two end flanges has twice as many openings **13***c*—**13***d* as an end flange, and alternate openings in each intermediate flange receive the elastic members **13***b* of one of the rolls **13**, while the other openings receive the elastic members of an adjacent roll **13**. Accordingly, each intermediate flange forms part of two adjacent rolls.

It will be understood that each of the rolls **13** has a resilient or yieldable periphery formed by the elastic members **13***b*. When these members are straight or unflexed (Fig. 3), they provide the roll periphery with a maximum radius. However, any part of the periphery of each roll is yieldable independently of the other rolls by flexing one or more of its elastic members inwardly as far as possible (to maximum tension) toward the shaft **11**. The rolls **13** have equal maximum radii, and they have uniform resistance to reduction in radius by stretching of the elastic members **13***b*.

An idler roller **15** is mounted in the container **10** below the level A of the liquid therein, where it is rotatable in bearings **16**. The fabric F, which is shown in the form of a rope or narrow web, is continuously fed into one end of the container from a supply point at constant speed, by feeding means which comprise a pair of nip rolls **17**, **17***a*. From the nip or feed rolls, the fabric passes partly around the first resilient roll **13**, then downward into the liquid and under and partly around the roller **15**, then upward from the liquid and over and partly around the second resilient roll **13**, and so on successively around the idler roller and the remaining resilient rolls **13**. The fabric is therefore supported in a series of loops forming a spiral in the container, with the lower parts of the loops immersed in the liquid. From the last roll **13**, the fabric extends upwardly and outwardly over another resilient roll **18** similar to the rolls **13**, and from the roll **18** the fabric descends to a delivery point outside the container. Between the resilient rolls **13** and the idler roller **15** is a cross piece **19** having a series of stationary pins **20** for guiding each loop over the central part of one of the resilient rolls **13**.

The means for feeding the fabric to the first resilient roll **13** comprise the nip rolls **17**—**17***a* and a constant speed motor **22** connected by a chain **23** to a sprocket wheel **23***a* on one of the nip rolls, such as the lower roll **17***a*. The resilient rolls **13** are driven by means comprising a motor **24** connected through a chain **25** to a sprocket wheel **26** on one end of shaft **11**. The speeds of the motors **22** and **24** are so related that the linear speed at which the fabric F is fed from the rolls **17**—**17***a* is less than the peripheral speed of each roll **13** at maximum radius but greater than the peripheral speed of each roll **13** at minimum radius. Thus, the nip rolls **17**—**17***a* and the motor **22** constitute a retarding device engaging the fabric in advance of the resilient rolls **13** and limiting the feeding of the fabric as aforesaid. On the opposite end of the shaft is a sprocket wheel **27** connected through a chain **28** to a sprocket wheel **29** for driving the resilient delivery roll **18**.

The operation of the apparatus is as follows. Let it be assumed that there is no stretching or shrinking of any part of the fabric passing from the feed rolls **17**—**17***a* to the delivery roll **18**, as when there is no fluid in the container **10**. In that case, the periphery of each transport roll **13** where it engages the fabric F in an arc will be reduced, by the fabric tension, from the maximum radius to a radius at which the peripheral speed of the roll is equal to the linear speed at which the fabric is fed from the feed rolls **17**—**17***a*. Thus, the rolls **13** will be distorted to intermediate radii at the regions where the fabric passes over them while the rolls are driven, the intermediate radii of the several rolls **13** being equal when there is uniform tension throughout the fabric. This condition is illustrated in Fig. 1, where the upper peripheral parts of alternate rolls **13** appear at a different radius than the other rolls **13** only because of the staggered relation of the elastic peripheral members **13***b* on adjacent rolls (Figs. 3 and 4). Actually, the average radius of each roll **13** where it engages the fabric, as shown in Fig. 1, is the same for all the rolls **13**. The tension at which the fabric is conveyed through the container **10** under this assumed condition may be referred to as the normal operating tension, and its magnitude will depend upon the extent to which the peripheral speed of the rolls **13** at maximum radius exceeds the linear feeding speed of the fabric from the rolls **17**—**17***a*, and also upon the resistance of the peripheral members **13***b* to stretching. By providing the motor **24** with a speed control (not shown), the normal operating tension may be readily adjusted to suit the characteristics of the particular fabric being processed. This tension may also be adjusted by varying the speed of the feed motor **22**, although it is generally desirable to maintain a feeding speed from the rolls **17**—**17***a* equal to the speed of the fabric at a prior stage in its processing.

Considering now the case where the fabric undergoes variations in length due to its reaction to the fluid in the bottom of the container, such variations will automatically adjust the radii of the transport rolls **13** by the attendant changes in fabric tension, and the resulting increase or decrease in the peripheral speeds of these rolls has the effect of counteracting the changes in fabric tension. Because each roll **13** can assume a radius different from the others, it can respond to local changes in the length of the corresponding loop of the fabric, while leaving the other rolls **13** free to respond to changes in the lengths of the other loops. Assuming that there is no slippage between the fabric and the rolls **13** (an assumption which is justified by reason of the strong frictional grip between the fabric and the elastic members **13***b*), the effective radius and therefore the peripheral speed of any roll **13** is determined by the tension in the fabric as it approaches the roll and not by the tension in the fabric leaving the roll. Consequently, upon increase in the length of the fabric in any loop between two adjacent rolls **13**, the tension in the loop will tend to decrease and allow the leading roll **13** to expand toward its maximum radius, thereby increasing its peripheral speed and drawing the fabric at a higher speed from the loop. The effect of this is to counteract the increase in the loop length by drawing the fabric from the loop at a greater speed than it is fed to the loop by the lagging roll, so as to maintain the tension substantially constant. Conversely, shrinking of the fabric in any loop between two adjacent rolls **13** causes a self-adjustment of the radius of the leading roll by the resulting increase in tension, so that the leading roll decreases sufficiently in radius and peripheral speed to withdraw fabric from the loop at a lower speed than it is fed to the loop by the lagging roll.

If it is assumed, for example, that the reaction of the fabric to the treating fluid causes a gradual shrinking as the fabric passes between the first and third rolls **13**, and then a gradual stretching to a length less than its initial length as the fabric passes over the remaining

rolls, the action will be as follows: The first three rolls **13** will assume radii less than the intermediate radii at the normal operating tension previously mentioned, due to the gradual shrinkage and the tendency to increase the tension. Consequently, the fabric path between each pair of these rolls **13** is shortened by an amount substantially equal to the amount of shrinkage of the fabric passing between such pair, and the peripheral speed of the third roll **13** is decreased to the point where it draws the fabric at a speed sufficiently lower than the constant feeding speed to substantially compensate for the overall shrinkage. In the third loop, immediately beyond the third roll **13**, there will be a tendency for the fabric tension to decrease due to the initial stretching, and an opposing tendency for the tension to increase due to the reduced speed at which the fabric is moved by the third roll. The unbalance, if any, of these opposing tendencies is substantially neutralized by the fourth roll **13**, which adjusts its radius to maintain approximately constant tension in the loop. The subsequent rolls **13** will assume radii which gradually increase, from one roll to the next, due to the gradual stretching of the fabric. However, the radii of these subsequent rolls **13** will be less than the intermediate radius at the normal tension previously mentioned, since it is assumed that the fabric does not stretch back to its initial length.

It will be apparent that by reason of the resilient rolls **13** and the aforementioned relation between the speeds of the motors **22** and **24**, the fabric is fed continuously and smoothly through the treating fluid without any substantial changes in the desired tension of the fabric, and regardless of variations in the amount or rate of change in the length of the fabric due to shrinking or stretching, locally or generally. Accordingly, the apparatus may be used for all types of fabrics, irrespective of differences in their reaction to the treating fluid in regard to shrinking and stretching. Moreover, with the new apparatus there is no possibility of the fabric wrapping itself around one or more of the rolls, as occurs in some of the prior machines for conveying fabrics.

The means for feeding the fabric F into the container **10** at constant linear speed may take other forms than that illustrated. For example, the feeding means may comprise, in conjunction with the transport rolls **13**, two or more tension bars **30—30***a*, the fabric passing partly around the first bar **30***a*, and then backward and partly around the second bar **30**, from which it passes to the first transport roll **13**, as shown in Fig. 5. The tension bars **30—30***a* impose a frictional resistance to movement of the fabric by the transport rolls **13**, and this resistance is sufficient to distort the peripheries of the rolls **13** from their maximum radii to intermediate radii, thereby providing the normal operating tension previously mentioned. The speed at which the cloth enters the container is a function of the setting of the tension bars and the pull exerted by the rolls **13** in drawing the fabric past the tension bars.

The apparatus illustrated in Figs. 1 through 4 is intended primarily for conveying fabrics which are in the form of a rope or narrow web. When it is desired to convey a wide length of fabric, the apparatus may take the form illustrated in Figs. 6, 7 and 8. As there shown, the apparatus comprises a container **31** for the treating fluid, which may be a liquid filling the container to the level A. Rotatably mounted at the open top of the container is a series of resilient transport rolls **32** which extend in parallel spaced relation across the container. The rolls **32** are provided at their ends with shafts **33** held in suitable bearings (not shown) on the sides of the container. Each roll **32** has a number of longitudinally extending, flat surfaces to which fingers or projections **32***a* are secured. The fingers **32***a* are made of spring metal and extend generally tangentially in the direction opposite to the direction of rotation of the roll. At their free ends, the spring fingers are bent at an angle away from the direction of rotation, as shown at **32***b* (Fig. 8). The free ends of the fingers **32***a* constitute resilient or yieldable peripheries of the respective rolls, and they are adapted to flex, as shown in dotted lines in Fig. 8, to vary the radius of the rolls from a maximum radius, at which the fingers are straight, to a minimum radius at which the free end portions of the fingers are flexed inwardly as far as possible toward the roll axis.

Below the resilient transport rolls **32** are idler or guide rolls **33***a* rotatably mounted in the container near the bottom, that is, below the liquid level A. The fabric F is fed at constant linear speed into one end of the container by feed means comprising a pair of nip rolls **34—34***a*. The fabric passes from the rolls **34—34***a* downward into the liquid, then under and partly around the first idler roll **33***a*, then upwardly from the liquid and over and partly around the first resilient roll **32**, and so on alternately to the next idler roll and the next resilient roll. Thus, the fabric is supported in a series of loops in the container, with the lower parts of the loops immersed in the liquid. From the last idler roll **33***a*, the fabric passes upwardly from the container and over another resilient roll **35**, from which the fabric descends to a delivery point outside the container.

The feeding means for the fabric comprise the nip rolls **34—34***a* and a constant speed motor **36** connected through a driving chain **37** to one of the nip rolls. The resilient transport rolls **32** are rotated by driving means comprising a constant speed motor **38** connected to each of these rolls through driving chains **39**, **39***a*, **39***b* and **39***c*. As in the embodiment of the invention first described, the speeds of the motors **36** and **38** are so related that the peripheral speed of each roll **32** at maximum radius is greater than the feeding speed of the fabric from the rolls **34—34***a*, but the peripheral speed of each roll **32** at minimum radius is less than this feeding speed.

The operation of this form of the apparatus will be readily understood from the previous description in connection with Figs. 1 through 4.

I claim:

1. In an apparatus for transporting a length of material from a supply point to a delivery point, the combination of a rotatable shaft, a plurality of axially spaced flanges secured to the shaft and rotatable therewith, and circumferentially spaced elastic members extending between and secured to each pair of adjacent flanges and forming a yielding roll periphery, the elastic members between each pair of flanges being anchored at their ends to the flanges under initial tension and being yieldable independently of the members between the other flanges, to decrease the radius of said periphery.

2. A combination according to claim 1, in which each flange between the two end flanges supports the elastic members of two adjacent roll peripheries.

3. The combination according to claim 1, comprising also means for driving said shaft, and an idler roller spaced from the shaft, said roller and elastic members being operable to support said material in a series of loops.

References Cited in the file of this patent

UNITED STATES PATENTS

344,238	Birch	June 22, 1886
721,630	Willard	Feb. 24, 1903
939,350	Thompson	Nov. 9, 1909
1,148,695	King	Aug. 3, 1915
1,682,453	Willheim	Aug. 28, 1928
1,956,807	Nicholas	May 1, 1934
1,971,627	Stuhlmann	Aug. 28, 1934
2,096,231	Ensign	Oct. 19, 1937
2,120,735	Debrie	June 14, 1938
2,135,516	Hurxthal	Nov. 8, 1938
2,146,170	Brenbarger et al.	Feb. 7, 1939
2,168,159	Hartt	Aug. 1, 1939
2,219,582	Tarbox	Oct. 29, 1940
2,227,186	Hamel	Dec. 31, 1940
2,239,636	Weiss	Apr. 22, 1941
2,276,605	Andrews	Mar. 17, 1942
2,361,633	Jones	Oct. 31, 1944
2,439,903	O'Connell	Apr. 20, 1948
2,549,043	Arthur	Apr. 17, 1951
2,628,834	Craib	Feb. 17, 1953

FOREIGN PATENTS

7,148	Great Britain	of 1902
358,498	Italy	Apr. 16, 1938