April 22, 1941. S. F. COX ET AL 2,239,517

WINDOW CONSTRUCTION

Filed Jan. 26, 1939

Fig. 1.

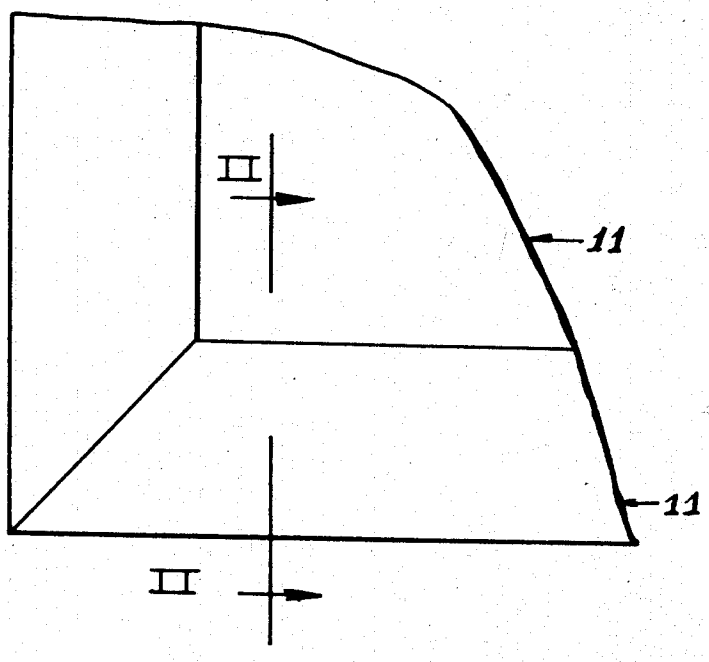

Fig. 2.

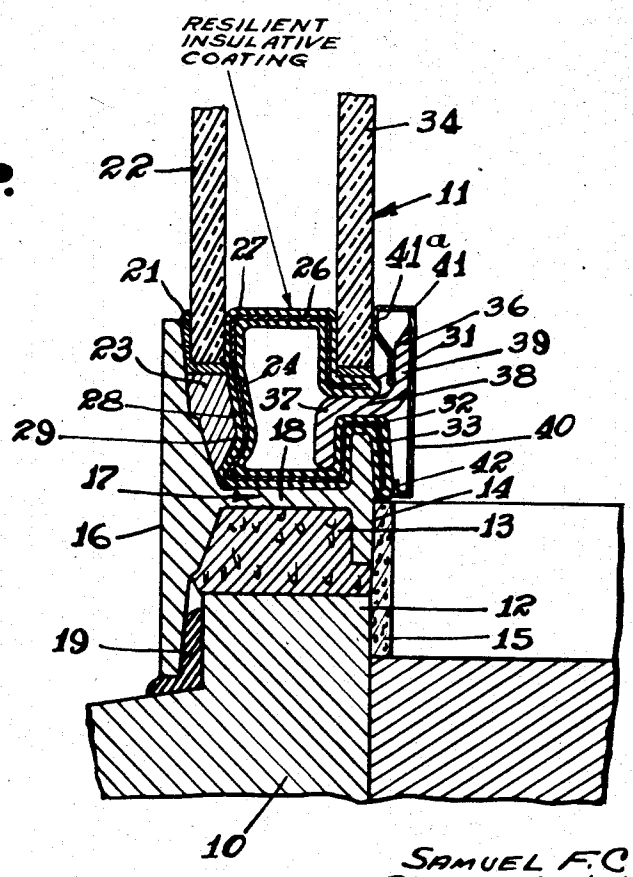

SAMUEL F. COX and PERCY E. KNUDSEN INVENTORS

BY Olen E. Bee

ATTORNEY

Patented Apr. 22, 1941 2,239,517

UNITED STATES PATENT OFFICE

2,239,517

WINDOW CONSTRUCTION

Samuel F. Cox and Percy E. Knudsen, Pittsburgh, Pa., assignors to Pittsburgh Plate Glass Company, a corporation of Pennsylvania

Application January 26, 1939, Serial No. 252,917

6 Claims. (Cl. 189—64)

The present invention relates to windows and notably to windows of the multiglazed type.

One object of the invention is to provide a multiglazed window construction in which there are no continuous metallic paths for the transmission of heat between the interior and exterior of the building in which the construction is installed.

A second object of the invention is to provide a construction of the foregoing type which is simple of design and in which one plate or sheet of glass can be removed for cleaning purposes without disturbing the others.

These and other objects of the invention will be apparent from consideration of the following specification and the appended claims.

It has heretofore been recognized that conventional windows involving single plates or panes of glass are relatively inefficient barriers to the transmission of heat to or from the interior of buildings in which they are installed. Much heat is lost through this path and moreover in cold weather the surface of the glass becomes so chilled that excessive condensation of moisture thereupon is likely to occur.

In order to obviate these objectionable features it has been proposed to provide windows including two or more sheets of glass disposed in a single frame and in such spaced relation with respect to each other as to provide insulative dead air chambers. The insulative value of the window is thus increased and the problem of moisture condensation upon the surface of the glass is reduced or eliminated. However, under most conditions of service, it has been found difficult completely to seal the space between the glass from the atmosphere and in time a certain amount of moisture will penetrate therein. This moisture tends to condense upon the surface of the glass and may produce a permanent moisture film thereupon. Moreover, it produces a hydrolytic effect which causes gradual decomposition of the surface of the glass, thus producing a haze or bloom which can only be removed by separating the sheets of glass and mechanically wiping the affected surfaces.

In conventional constructions the inner or outer sheets or plates of glass are so clamped into frames that it is difficult to remove one sheet of glass to admit of cleaning thereof without also removing the second sheet. Removal of both sheets entails considerable labor and the handling of both sheets increases the hazard of breakage. Manifestly, under many conditions, for example, in winter time the removal of both sheets of glass exposes the interior building to the outside air which of course constitutes a nuisance.

In most modern constructions the frames in which the glass is mounted are formed at least in part of metal and even though the spaced sheets of glass provide excellent heat barriers, the frames in which the glass is mounted provide paths for the conduction of heat between the interior and exterior of the building. In extremely cold weather the inner surface of the metal frame may become so chilled by conduction of heat to the exterior of the building that condensation of moisture upon the exposed inner surface may occur.

In accordance with the provisions of the present invention the foregoing difficulties are eliminated or at least reduced by provision of a frame element providing a channel in which is disposed a spacer adapted to clamp one of the sheets or panes of glass independently of the second and the second is clamped by removable devices to admit of taking out a second sheet of glass, thus giving access to the interior of the construction. As a further feature, the invention involves the provision of suitable clamping devices which are so insulated or covered as to inhibit the transmission of heat between the interior and exterior of the building in which the units are employed.

For a better understanding of the invention reference may now be had to the accompanying drawing in which Figure 1 is a fragmentary elevational view of a window construction embodying the invention and Figure 2 is a fragmentary cross-sectional view taken substantially upon the line II—II of Figure 1.

As best shown in Figure 2, the construction may embody any suitable wall structure 10, defining an opening in which is disposed the window construction 11. The wall includes a marginal shoulder 12 about the opening, which shoulder is capped or covered by layer 13 of cement or other substance which in plastic state can be so shaped as approximately to fit within a channel provided between inner and outer flanges 14 and 16, of a horizontal bar 17 having a horizontally disposed connecting web 18. The lower portion of flange 14 may be covered by a layer 15 of plaster or other insulative material. The lower edge of flange 16 may be slightly spaced from the outer face of shoulder 12 which spacing is filled by means of a plastic caulking material 19.

It will be noted that the upper edge of flange 16 extends substantially above the corresponding edge of flange 14 and provides an abutment which is engaged by a layer 21 of plastic material about the margin the outer plate 22 of glass. This seats upon or engages suitable ledges 23 which are welded to flange 16. The glass 22 is maintained in position upon the ledges by means of a combined clamping and spacing element 24 comprising a tubular bar of approximately rectangular cross-section. The bar is formed by suitably bending a plate 26 of metal having a covering 27 of rubber or other plastic material of sufficiently low capacity for the conduction

of heat and the outer wall 28 thereof is slightly concave as indicated at 29 to follow the contour of the ledge 23. Also, the margins of the plate 26 are bent forwardly to provide upper lip 31 and lower lip 32, the latter lip being downwardly bent as indicated at 33, partially or completely to cover the forward face of the flange 14. The lip 31 provides a seat upon which rests marginal portions of an inner sheet or plate of glass 34.

The glass is maintained from displacement from the lip 31 by means of securing devices comprising bars 36 which may be approximately of Z-shaped cross-sectional outline and involving a downwardly-extending inner flange 37, a web 38 and an outer flange 39 extending upwardly in slightly spaced relation with respect to the outer face of the glass 34.

It will be evident that element 38 may comprise a single bar extending substantially the entire width or height of the window construction with which it is employed, or if preferred it may comprise a plurality of sections which may be suitably spaced with respect to each other, or which may be disposed in an abutting relation in order to provide substantially continuous support along the lower length of the lip 27.

A finish strip or cover plate 40 approximately of C-shape and including an upper lip 41 bent over to grip the flange 36 and, also, to provide a bead 41*a* engaging the outer face of plate 34. The finished strip further includes a lower lip 42 upwardly bent to engage the face of portion 43. This strip may be formed of aluminum, stainless steel, or other metal having a certain degree of resiliency.

In the assembly of the construction the spacer 24 along the lower edge of the construction may be disposed in the channel provided by the flanges 14 and 16. Subsequently the outer sheet of glass 22 is mounted upon the ledge 23. Spacers 24 and corresponding bars 23 are then disposed along the vertical and upper margins of the glass completely to clamp the latter in position. Next the bars 36 are inserted between lips 31 and 32 at least along the lower horizontal portion thereof and the glass 34 is slipped into position. The spacer elements 36 along the vertical edges and along the upper horizontal reach may be inserted either prior to or subsequent to the insertion of the glass 34. The inherent resiliency of the plates 26 and the plastic covering thereupon admit of slightly canting bar 36 in order to swing lip 39 forwardly, to permit the insertion of the devices 36 even after the glass has been disposed in position. The cover plates 40 when disposed upon element 36 engage the forward face of the glass 34 firmly to clasp the latter in position and also to provide a decorative finish for the construction.

In event that it is desired to remove the glass 34 in order to give access to the interior of the construction, it is a relatively simple matter to remove the cover plates and then to slip the glass out either by springing the elements 36 outwardly sufficiently to permit the edges of the glass to clear them, or by entirely removing the element 36.

The spacer element by reason of its resiliency securely clasps the sheet 22, even after the sheet 34 has been removed, and thus prevents direct admission of outside air to the building. It will, also, be apparent that the covering upon the plate 26 of the spacer bar or element prevents the transmission of heat through the metallic parts and obviates condensation of moisture upon exposed metallic surfaces.

Likewise, it will be apparent that the construction can be assembled and secured in position without provision of openings for bolts in the bars 17, which constitute permanent elements in the building.

The form of the invention herein shown and described is susceptible to numerous modifications without departure from the spirit of the invention or the scope of the appended claims.

What I claim is:

1. A window construction comprising a frame of bars having a pair of spaced flanges providing marginal channels, one of the flanges being of substantially greater width than the other, a sheet of glass engaging the wider one of the said flanges, a spacer bar disposed in the channel and engaging at one edge with the glass to maintain the latter in position, said spacer bar being of split tubular construction and having marginal portions outwardly bent to provide flanges, clamping members secured in the split, between the flanges, said clamping member being approximately of Z-shape cross-sectional outline and including a downwardly-directed inner flange and an upwardly-directed outer flange, a second sheet of glass being disposed upon the upper of the marginal flanges of the spacer bar and being maintained in position by the upwardly-directed flange of the clamping member.

2. A construction as defined in claim 1 in which a cover plate approximately of C-shape cross-section is clipped over the securing member and covers the split in the bar.

3. A window construction comprising a frame having a marginal flange and a sheet of glass in the frame having the marginal portions of a face thereof abutting the flange, a spacer bar engaging the marginal portions of the remaining face of the sheet, the bar being tubular and longitudinally split along the side remote from the sheet and having an edge at the split outwardly bent with respect to said sheet to provide a flange, a second sheet of glass seated upon the flange in spaced parallel relation with respect to the first-mentioned sheet and a securing element for the second sheet including a portion inserted in the split of the bar and having a second portion upwardly bent to provide an abutment preventing displacement of the second sheet of glass from the seating flange.

4. A construction as defined in claim 3 in which the spacer bar is provided with an adherent rubber covering.

5. A spacer bar for use as a spacing element between sheets of glass in a multiglazed window, said bar comprising a tube of resilient metal, the tube being longitudinally split and having both edge portions of the split outwardly bent, said edge portions being superposed to provide a seat for a sheet of glass.

6. A spacer bar as defined in claim 5 in which the lower of the two superposed portions is provided with a downwardly-projecting lip adapted to hook over a flange projecting upwardly from a window frame in which the spacer bar is disposed.

SAMUEL F. COX.
PERCY E. KNUDSEN.