No. 611,496. Patented Sept. 27, 1898.

# E. LIZE.

## SAFETY VALVE.

(Application filed Dec. 15, 1897.)

(No Model.) 3 Sheets—Sheet 1.

Fig. 2.

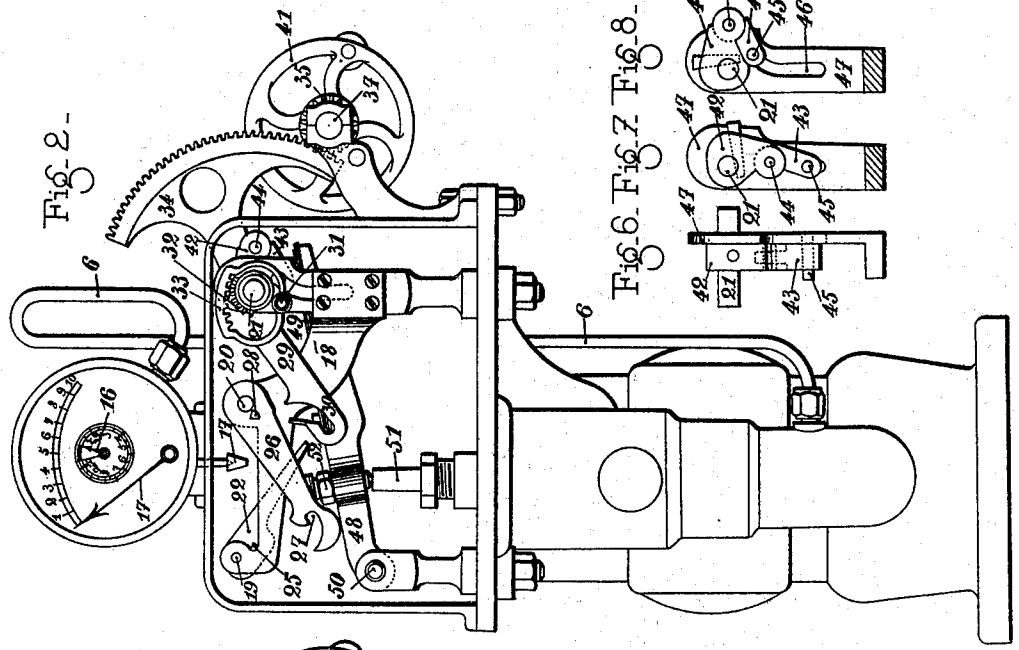

Fig. 6. Fig. 7. Fig. 8.



Fig. 1.

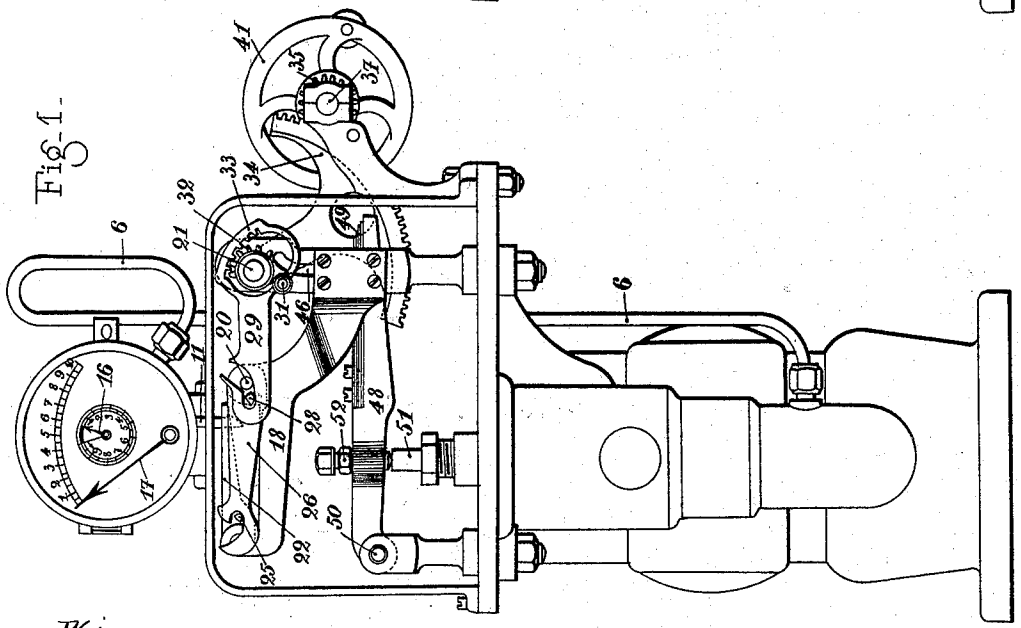

Witnesses
H. B. Keedy
R. D. Johnston Jr.

Inventor
Ernest Lize
By James L. Norris
Atty

THE NORRIS PETERS CO., PHOTO-LITHO., WASHINGTON, D. C.

No. 611,496.

Patented Sept. 27, 1898.

E. LIZÉ.

SAFETY VALVE.

(Application filed Dec. 15, 1897.)

(No Model.)

3 Sheets—Sheet 2.

Fig. 4.

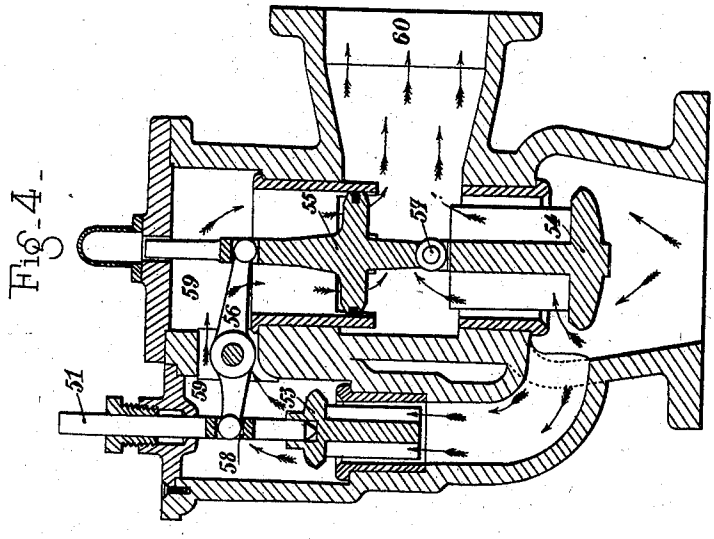


Fig. 3.

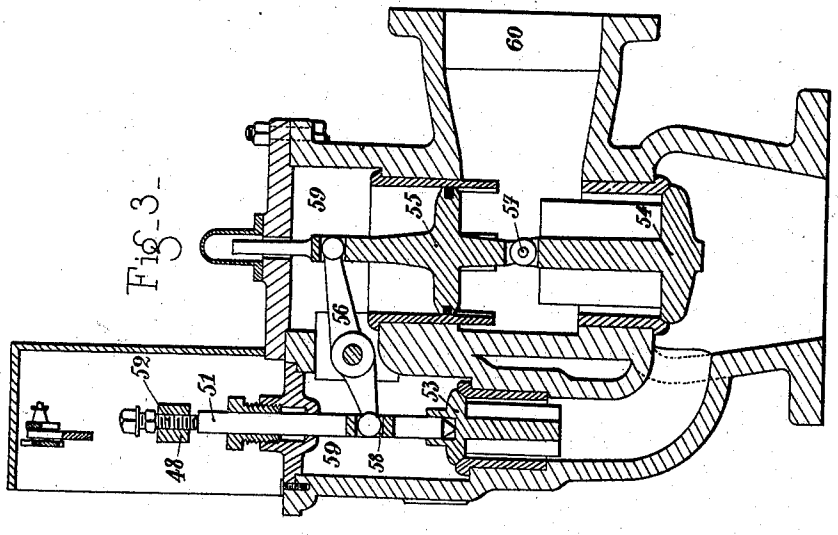


Witnesses

F. B. Keefer

R. S. Johnston Jr.

Inventor

Ernest Lizé

By James L. Norris

Atty

THE NORRIS PETERS CO., PHOTO-LITHO., WASHINGTON, D. C.

No. 611,496. Patented Sept. 27, 1898.

E. LIZÉ.

SAFETY VALVE.

(Application filed Dec. 15, 1897.)

(No Model.)

3 Sheets—Sheet 3.

Fig. 9.

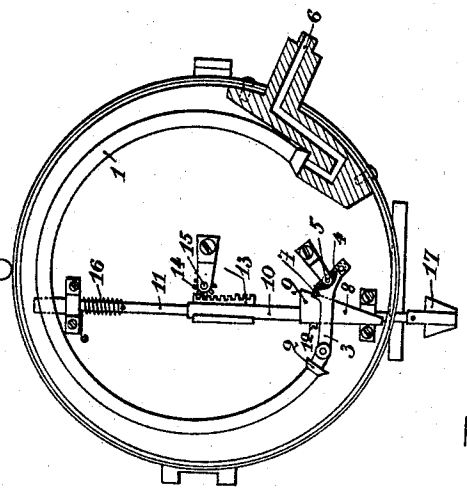

Fig. 10.

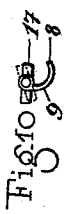

Fig. 5.

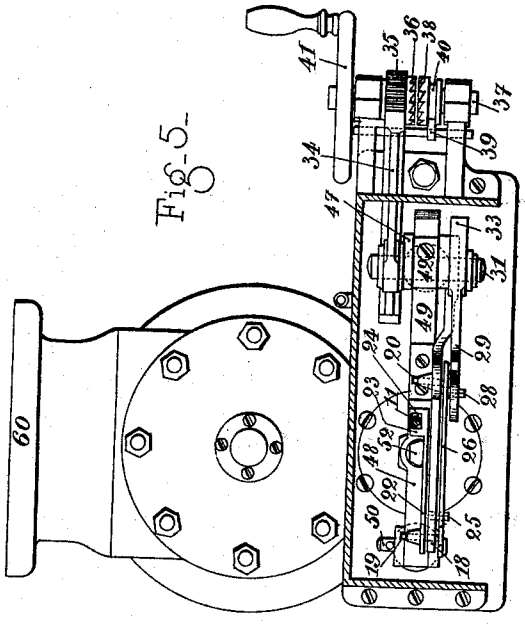

Witnesses

H. B. Keller

R. A. Johnston Jr.

Inventor

Ernest Lizé

By James L. Norris

Atty

THE NORRIS PETERS CO., PHOTO-LITHO., WASHINGTON, D. C.

# UNITED STATES PATENT OFFICE.

ERNEST LIZÉ, OF PARIS, FRANCE.

## SAFETY-VALVE.

SPECIFICATION forming part of Letters Patent No. 611,496, dated September 27, 1898.

Application filed December 15, 1897. Serial No. 662,032. (No model.)

*To all whom it may concern:*

Be it known that I, ERNEST LIZÉ, a citizen of the United States of America, residing at Paris, France, have invented certain new and useful improvements in apparatus for insuring the proper working of steam-generators or other receptacles containing fluids under pressure, of which the following is a specification.

This invention relates to safety-valves by which the proper working of steam-generators or other receptacles containing fluid under pressure is insured, the effect of the said valve being to prevent the pressure from exceeding a given predetermined limit which can be regulated at will.

The essential feature of the invention is to so connect the pressure-gage with a system of levers and valves that when the pressure-gage indicator arrives at a predetermined degree upon the graduated scale the effect produced upon the pressure-gage by such pressure throws an engaging and disengaging mechanism into action, which operates mechanism to cause a large discharge or safety valve to open and the excess of fluid (which I will refer to as "steam") in the boiler or equivalent vessel to be freely discharged therefrom. After the dangerous limit has thus been avoided and after the pressure in the interior of the boiler or vessel has returned below this limit, owing to the discharge, the discharge is stopped at the proper time by closing the discharge or safety valve by hand and by returning the mechanism to its proper position relatively to the pressure-gage, when the safety apparatus is ready for another operation.

In order that my invention may be well understood, I will describe an arrangement according thereto with reference to the accompanying drawings, premising that I do not limit myself to the precise details shown.

Figure 1 represents the apparatus in elevation in position ready for operation. Fig. 2 is a like view showing the arrangement of the different parts in the position which they occupy on discharge taking place. Fig. 3 shows the arrangement of the valves relatively to each other in the closed position. Fig. 4 shows the same with the valves in the open position. Fig. 5 is a plan of the apparatus. Figs. 6 and 7 are views at right angles to each other of the knee-piece for stopping the lever of the valves, and Fig. 8 is a view like Fig. 7 with the parts in another position. Fig. 9 represents the pressure-gage with the dial removed. Fig. 10 is an end view of the cam and of the hook which operate the mechanism, as hereinafter described.

The pressure-gage is composed of a "Bourdon" tube 1, the free extremity 2 of which through the intermediary of the levers 3 and 4 causes the axis 5 to turn. Upon this axis is fixed a hand which moves over a dial graduated to indicate atmospheres—say, for example, in centimeter squares—so that at any moment the pressure in the boiler or vessel, to which the pressure-gage is connected by the tube 6, can be read from the dial. A pin 7 is fixed to the lever 3, the said pin being of a sufficient length to come into contact with the inclined plane 8 of the curved and inclined piece 9, which is fixed upon a socket or sleeve 10, which can slide upon the rod 11, but which in its rotary movements carries the said rod with it, owing to the screw 12 entering a groove and forming a tongue-and-groove connection. The socket 10 receives longitudinal movement from the rack-bar 13 and pinion 14, which is caused to turn by means of a hand fixed upon the axis 15 of the said pinion. The point of this hand moves over a graduated scale indicating atmospheres in kilograms.

The cross-piece 17 is firmly connected to the rod 11 and serves by its rotary movement to retain and release the first of the valve-actuating levers. A spring 16 serves to automatically return this hook to normal position. The degree of inclination of the inclined plane 8 of the piece 9 is such that the pin 7 causes the said piece 9 to so turn that the cross-piece 17 releases the lever when a pressure is produced in the boiler or vessel which corresponds to that indicated upon the dial fitted with the hand 16, Figs. 1 and 2.

The support 18 carries a lever 22, which turns upon the axis 19, and is provided with an opening 24, Fig. 5, so that the cross-piece 17 can pass across only in the position which corresponds to the release of the levers.

The lever 22 is provided with a projection 25, with a knife-edge on its upper side. The

lever 26 turns upon the axis 20 and is hooked onto the projection 25 by a notch 27. The said lever 26 carries a projection 28, to which the lever 29 is hooked by a notch 30. This lever 29 turns upon the axis 21 and in so doing carries along with it the pinion 32, which is mounted on the axis 21 by means of the internal gearing 33. Upon this axis 21 a toothed sector 34 is keyed, the teeth of which engage with those of a pinion 35, connected to one member of a coupling-clutch 36. The other member 38 of this clutch is connected to the shaft 37 by means of a long collar. A finger 39 by entering the groove 40 prevents the teeth of the clutch from engagement. When the finger is lifted, then the engaging movement can take place. On turning a hand-wheel 41 the shaft 37 and the clutch 38 can be rotated.

Upon the axis 21 a knee-piece is keyed, Figs. 2, 7, and 8, formed of two parts 42 and 43, connected by the pin 44. The part 43 carries two projections 45, which slide in the grooves 46 of the frames 47. Against the end of the part 43 the lever 48 bears through the medium of a leaf-spring 49. This lever turns upon the axis 50 and is provided with a set-screw 52, which bears against the rod 51, which actuates the valves.

When the lever 22 is no longer supported by the cross-piece 17 of the pressure-gage, the various levers occupy the position shown in Fig. 2, the knee-piece 42 43 bends, and the rod 51 rises under the pressure of the steam and thus admits the discharge to take place.

In the valve-casing two valves of different diameters are arranged—a small one 53 and a large one 54. The valve-casing also contains a piston 55, connected to the valve 54 by a joint 57. These two valves receive the pressure of the steam in reverse directions, the small one from below and the large one from above. The diameter of the piston 55 is greater than that of the large valve 54 and moves in a cylinder provided with openings at the lower part. The rod 51 is connected to the piston 55 by the lever 56.

When owing to the release of the levers the rod 51 has been freed and rises under the action of the steam, exerting pressure upon the valve 53, and owing to the play at the joint 58 the steam enters the chamber 59, and as the diameter of the piston 55 is greater than that of the valve 54, the steam causes these two parts to descend, and the steam escapes into the atmosphere through the tubular mouth 60, following the direction indicated by the arrows. The steam escapes both through the valve 53 and the openings in the piston 55 and through the valve 54. This discharge is stopped at will by closing the valves 53 and 54 by means of the rod 51 and of the hand-wheel 41.

The operation of the mechanism is as follows: The hand 16 is placed opposite the figure on the small dial of pressure-gage corresponding to the pressure at which the apparatus is to work. By this movement the socket or sleeve 10 and the piece 9 are brought into such a position that when the steam under pressure acts on the pressure-gage 1 it causes the finger 7 to act upon the piece 9, which as it rotates carries along with it the rod 11 and the cross-piece 17, which, thus being brought into the position represented in Fig. 10, frees the lever 22, and the levers 26 and 29 are thereby released. Under the pressure of the rod 51, which tends to rise, the knee-piece 42 43 becomes bent, and the lever 48 can then turn about its axis, whereby the rod 51 can rise. As the valve 53 is no longer applied to its seat, it admits of the steam from the boiler entering the chamber 59 and acting upon the piston 55, which in descending opens the discharge or safety valve 54, and the steam is then enabled to escape through this valve 54 and through the openings in the cylinder of the piston 55. When the pressure has again become normal, the attendant engages the clutch-coupling 36 38 by acting by hand upon the crank 41 and returns the valves to their original position by lifting the levers and by thus causing the cross-piece 17 to engage with the opening 24 of the lever 22. The apparatus is then ready for operation as soon as the pressure indicated on the dial of the pressure-gage has been reached.

Having now particularly described and ascertained the nature of my invention and in what manner the same is to be performed, I declare that what I claim is—

1. The combination with a vessel for containing fluid under pressure, of a relief-valve arranged to be opened by the pressure of the fluid to permit the latter to escape from the vessel, mechanism for holding the relief-valve closed against the pressure of the fluid, a pressure-gage connected with the vessel, and means operated by the gage for releasing the valve-holding mechanism when a predetermined pressure is reached, and permitting the relief-valve to open and relieve the pressure, substantially as described.

2. The combination with a vessel for containing fluid under pressure, of a relief-valve arranged to be opened by the pressure of the fluid to permit the latter to escape from the vessel, mechanism for holding the relief-valve closed against the pressure of the fluid, a pressure-gage connected with the vessel, means operated by the gage for releasing the valve-holding mechanism when a predetermined pressure is reached, and means for adjusting the releasing mechanism to release the valve-holding mechanism at any desired pressure, substantially as described.

3. The combination with a vessel for containing fluid under pressure, of a relief-valve arranged to be opened by the pressure of the fluid to permit the latter to escape from the vessel, mechanism for holding the relief-valve closed against the pressure of the fluid, a lever for controlling said mechanism, a pressure-gage connected with the vessel, a rod

provided with a projection engaging said controlling-lever to normally hold the relief-valve closed, and mechanism operated by the pressure-gage for actuating said rod to release the controlling-lever and permit the relief-valve to open, substantially as described.

4. The combination with a vessel for containing fluid under pressure, of a relief-valve arranged to be opened by the pressure of the fluid to permit the latter to escape from the vessel, mechanism for holding the relief-valve closed against the pressure of the fluid, a lever for controlling said mechanism, a pressure-gage connected with the vessel, a rotatable rod provided with a headed projection passed through a correspondingly-shaped aperture in the controlling-lever and engaging the under side of the lever to hold the latter elevated to keep the valve closed, a wedge-shaped cam adjustable vertically on said rod, a pivoted lever arranged to be oscillated by the steam-gage and provided with a stud engaging the inclined face of the cam and operating to turn the rod to release the lever and permit the valve to open, and means for adjusting the cam on the rod to release the valve-holding mechanism at any desired pressure, substantially as described.

5. A relief-valve comprising a casing having oppositely-arranged discharge-ports, an inwardly-opening valve controlling one of said ports, a cylinder arranged in the other port and having outlets formed in its discharge end, a piston-valve arranged in said cylinder and adapted to uncover said outlets to permit the escape of the fluid therethrough, said valves being connected together, a duct leading from the opposite sides of said valves, a valve arranged in said duct and arranged to be opened by the pressure of the fluid, means operated by said valve for opening the discharge-valves, and mechanism for normally holding the said valves closed, substantially as described.

In testimony whereof I have hereunto set my hand in presence of two subscribing witnesses.

ERNEST LIZÉ.

Witnesses:
ALFRED FREY,
EDWARD P. MACLEAN.