Office de la Propriété Intellectuelle du Canada
Un organisme d'Industrie Canada

Canadian Intellectual Property Office
An agency of Industry Canada

CA 2161846 C 2003/01/14

(11)(21) 2 161 846

(12) BREVET CANADIEN
CANADIAN PATENT

(13) C

(22) Date de dépôt/Filing Date: 1995/10/31

(41) Mise à la disp. pub./Open to Public Insp.: 1996/05/01

(45) Date de délivrance/Issue Date: 2003/01/14

(30) Priorité/Priority: 1994/10/31 (P 06-267439) JP

(51) Cl.Int.^{6}/Int.Cl.^{6} H04N 5/46, H04N 7/10

(72) Inventeurs/Inventors:
MIYAHARA, YASUNORI, JP;
OUMI, YOSHITOMO, JP;
ANZAI, SYUNICHI, JP;
KUZE, ATSUMI, JP

(73) Propriétaire/Owner:
KABUSHIKI KAISHA TOSHIBA, JP

(74) Agent: GOUDREAU GAGE DUBUC

(54) Titre : RECEPTEUR DE TELEVISION
(54) Title: TELEVISION RECEIVER

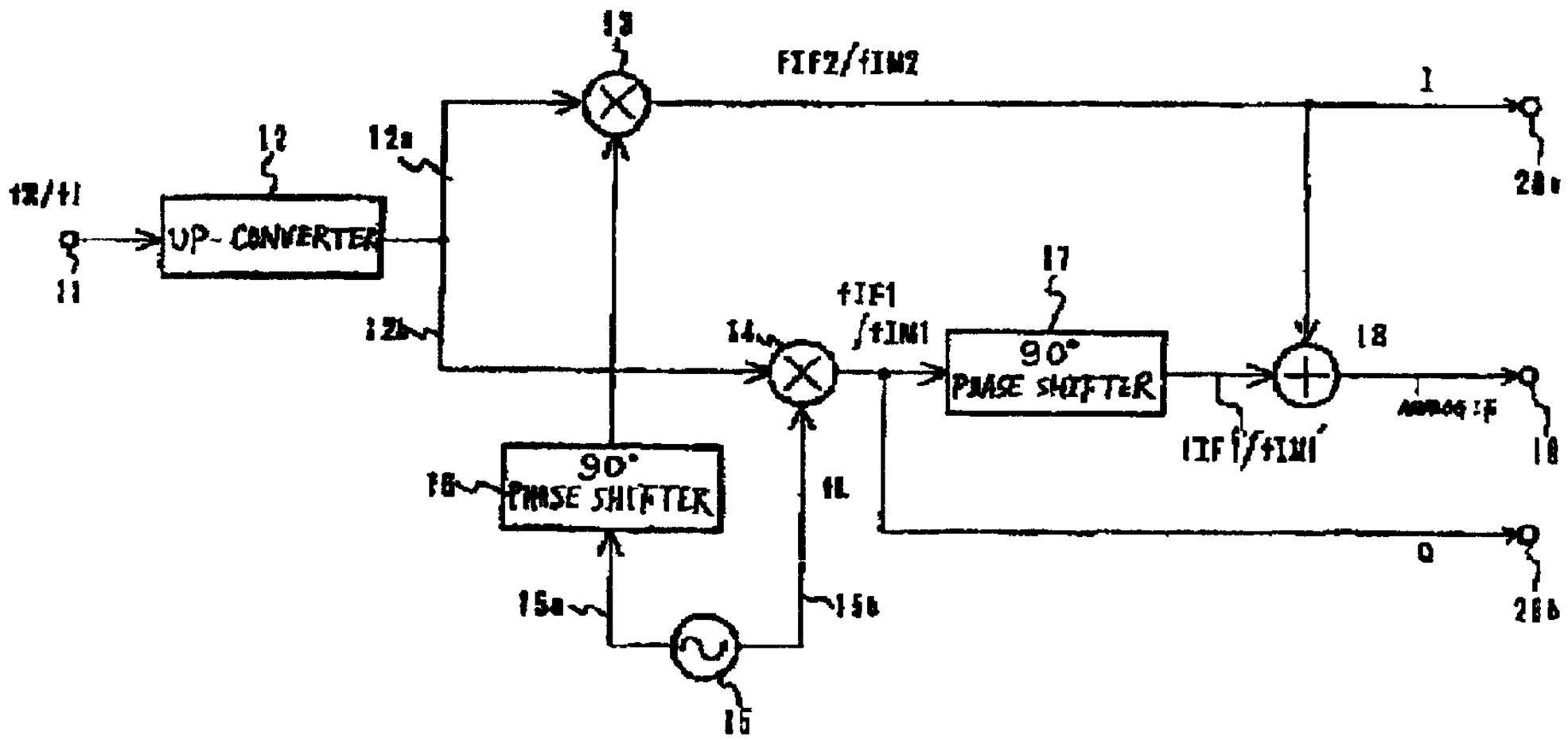

(57) Abrégé/Abstract:
A television receiver having an input section for splitting a reception signal to a first signal and a second signal, first and second mixers for receiving the split reception signals from the splitting means to their one inputs, respectively, a local oscillator for outputting first and second local oscillation signals, a 90° phase shifter for providing the first local oscillation signal to the other input of the first mixer after phase-shifting by 90°, a first output section for directly extracting outputs from the first and the second mixers, and a second output section for outputting a second output obtained by adding a direct output from the first mixer and the output from the second mixer through another 90° phase shifter.

ABSTRACT OF THE DISCLOSURE

A television receiver having an input section for splitting a reception signal to a first signal and a second signal, first and second mixers for receiving the split reception signals from the splitting means to their one inputs, respectively, a local oscillator for outputting first and second local oscillation signals, a 90° phase shifter for providing the first local oscillation signal to the other input of the first mixer after phase-shifting by 90°, a first output section for directly extracting outputs from the first and the second mixers, and a second output section for outputting a second output obtained by adding a direct output from the first mixer and the output from the second mixer through another 90° phase shifter.

TITLE OF THE INVENTION

TELEVISION RECEIVER

FIELD OF THE INVENTION

The present invention relates to a television receiver, and more particularly, to a television receiver which is capable of receiving both of a digital broadcasting signal and an analog broadcasting signal, like in a CATV system.

BACKGROUND OF THE INVENTION

Generally, a conventional CATV receiver system in analog broadcasting systems employs a double superheterodyne system to decrease an image frequency interference signal which is caused by a cross modulation. FIGURE 4 shows in a block diagram a double superheterodyne system tuner circuit of the CATV receiver in the conventional analog broadcasting system. In FIGURE 4, a numeral 41 denotes a tuner input section of the CATV receiver. A high-frequency reception signal of a desired channel received through the input section 41 is selected by an up-converter 42 and then converted to a higher frequency of first intermediate frequency (IF) signal. The first IF signal is again down-converted to a second IF signal with a fixed frequency by a mixing process in a mixer 43 with

a local oscillation frequency from a local oscillator 44. The second IF signal is then led to an output section 45. The second IF signal is served as an IF signal of TV signals, which is used for extracting an audio signal and a video signal in the TV reception through a demodulation of the signal.

FIGURE 5 is a block diagram showing a tuner circuit of the CATV receiver in a digital broadcasting system. Here, the digital broadcasting system will be exemplified by taking a multi-value QAM modulation system. In FIGURE 5 a numeral 51 denotes a tuner input section of the CATV receiver. A high-frequency reception signal of a desired channel received through the input section 51 is selected by an up-converter 52, and then converted to a higher frequency first IF signal therein. The higher frequency first IF signal is split to two signals for individual one inputs of mixers 53 and 54, respectively. One of split oscillation signals output from a local oscillator 55 is supplied to the other input of the mixer 53 after phase-shifted by 90° through a 90° phase shifter 56 for a QAM detection. The other oscillation signal is directly supplied the other input of the mixer 54. The outputs of the mixers 53 and 54 will be obtained as an I signal and a Q signal, respectively, which are detection signals of the multi-value QAM signal carried by the reception signal. The I signal and the Q signal are led to output sections 57 and 58, respectively. The I and Q signals

are used for extracting the audio signal and the video signal in the TV reception through a multi-value PSK modulator and a digital modulator.

The above-described arrangement thus constitutes the CATV receiver compatible to both the analog broadcasting and the digital broadcasting systems. However, in CATV systems all broadcasting channels are not always transmitted by a fixed one of the digital broadcasting system and the analog broadcasting system, but the analog broadcasting channels and the digital broadcasting channels are combinedly transmitted in the CATV system. So a receiver which is compatible to both the analog broadcasting and the digital broadcasting has been required. Such a receiver compatible to both the analog and digital broadcastings is realized by the present invention which is implemented mainly on a digital broadcasting receiver as described later.

Returning again to FIGURE 5, when a signal received through the input section 51 is the analog broadcasting signal, the high-frequency analog signal of a desired channel received through the input section 51 is processed by the up-converter 52 with a channel selection and a frequency conversion to a higher frequency first IF signal. The higher frequency first IF signal is then split to two signals. Here in case of analog broadcasting reception, either one of the two split signals may only be used for processing the TV signal. For example, here it is assumed that only the first

IF signal applied to the mixer 54 will be utilized. Further in case of analog broadcasting reception the other mixer 53 and the 90° phase shifter 56 are not needed to work. Thus in case of the analog broadcasting reception the first IF signal and the oscillation signal 52 directly output from the local oscillator 55 are mixed in the mixer 53 and then converted to a second IF signal. The second IF signal is served as the IF signal of the TV signal which is to be used for extracting the audio signal and the video signal in the TV reception by demodulating the signal.

The above-described arrangement thus constitutes the CATV receiver compatible to both the analog broadcasting and the digital broadcasting systems by utilizing the digital broadcasting reception system as it is. However, in the CATV receiver arranged as mentioned above image frequency interference signals especially in the analog broadcasting reception have caused a problem.

The image frequency interference signal will be explained in reference to FIGURE 6. In CATV receivers for the analog broadcasting, a desired reception signal fR and its image frequency interference signal fI, shown in FIGURE 6, are received through the input terminal 51. The desired reception signal fR of the desired channel and the image frequency interference signal fI are selected by the up-converter 52,the channels and then converted to higher frequency first IF signals corresponding to thereof in the

up-converter 52. The first IF signals having a fixed frequency are converted to second IF signals in the mixer 54 through a mixing operation with the local oscillation signal from the local oscillator 55. At this time, the image frequency interference signal fI applied to the mixer 54 results an image IF interference signal fIM which corresponds to a differential frequency between the frequencies of the image frequency interference signal fI and the local oscillation signal fL on the output terminal 58. The image IF interference signal fIM in the output signal on the terminal 58 is then eliminated by a suitable filter for providing only the desired second IF signal fIF to a following stage for processing the second IF signal.

In this way, such a surface wave TV system with channels spaced each other with a relatively wide interval can eliminate the image frequency interference signal fIM by a suitably designed filter which passes therethrough the local oscillation signal fL, since the image IF interference signal fIM can not fall into the band of the local oscillation signal fL of the selected channel. However, in the case of the CATV broadcasting, as shown in FIGURE 6, there is no space between the channel intervals different from those in the surface wave TV system. Since in the local oscillation signal IF converted in frequency by the mixer 54 the image IF interference signal fIM falls into the band of the local oscillation signal fL of the selected channel when the

reception signal is received, it is difficult to eliminate the image IF interference signal fIM at the filter for passing the local oscillation signal fL. It is difficult for the conventional CATV tuner to vigorously depress the image IF interference signal fIM from cost and technical aspects, so it has been taking a countermeasure to intensify a shield for tuners. However, since it is impossible to eliminate whole of the image IF interference signal fIM the receiving performance was deteriorated in the analog broadcasting reception state in the CATV receiver.

As described above, conventional CATV receivers have a drawback that it is difficult in cost and technical aspects to fully eliminate image frequency interference signals which are generated in conjunction with a frequency conversion in the mixer.

SUMMARY OF THE INVENTION

It is, therefore, an object of the present invention to provide a television receiver compatible to an analog broadcasting reception and a digital broadcasting reception which is able to effectively eliminate image interference signals disturbing the analog broadcasting reception.

In order to achieve the above object, a television receiver according to one aspect of the present invention includes means for splitting a reception signal to a first

signal and a second signal, first and second mixers for receiving the split reception signals from the splitting means to their one inputs, a local oscillator for outputting first and second local oscillation signals, means for providing the first local oscillation signal to the other input of the first mixer through a 90° phase shifter which shifts the phase by 90°, first output means for directly extracting outputs from the first and the second mixers, and second output means for outputting a second output obtained by adding a direct output from the first mixer and the output from the second mixer through another 90° phase shifter.

According to the arrangement as mentioned above, in processing of the second IF signal, since the mixer works for eliminating the image frequency interference signal, a signal deterioration by image frequency interference signals which had issued troubles in the conventional CATV broadcasting receivers can be reduced.

Additional objects and advantages of the present invention will be apparent to persons skilled in the art from a study of the following description and the accompanying drawings, which are hereby incorporated in and constitute a part of this specification.

BRIEF DESCRIPTION OF THE DRAWINGS

A more complete appreciation of the present invention and

many of the attendant advantages thereof will be readily obtained as the same becomes better understood by reference to the following detailed description when considered in connection with the accompanying drawings, wherein:

FIGURE 1 is a block diagram showing one embodiment of the present invention;

FIGURE 2 is a block diagram showing another embodiment of the present invention;

FIGURE 3 is a block diagram showing still another embodiment of the present invention;

FIGURE 4 is a block diagram showing a conventional analog broadcasting CATV receiver;

FIGURE 5 is a block diagram showing a conventional digital broadcasting CATV receiver; and

FIGURE 6 is a frequency characteristics diagram for showing a distribution of image frequency interference components.

DESCRIPTION OF THE PREFERRED EMBODIMENTS

Embodiments of the television receiver according to the present invention will be explained hereinafter in reference to the attached drawings FIGURES 1, 2 and 3.

FIGURE 1 shows a block diagram illustrating an embodiment of the present invention. A high-frequency reception signal of a desired channel received through a tuner input section

11 of a CATV receiver is selected by an up-converter 12 and then split to two of first higher intermediate frequency (IF) signals 12a, 12b. These two first higher IF signals 12a, 12b are supplied to one inputs of mixers 13 and 14, respectively. The other input of the mixer 13 is supplied with an oscillation signal 15a of two split oscillation signals 15a, 15b from a local oscillator 15 through a 90° phase shifter 16. Also the other input of the mixer 14 is directly supplied with the other split oscillation signal 15b. The output of the mixer 13 is coupled to a 90° phase shifter 17. The output of the 90° phase shifter 17 is then added with the output of the mixer 13 in an adder 18. Thus the sum obtained in the adder 18 is output as an analog IF signal through an output terminal 19. Further, the output signal of the mixers 13 and 14 are led to output terminals 20a and 20b, respectively, as digital I and Q detection outputs.

In the digital broadcasting reception, the CATV tuner constituted as described above has a configuration the same as the conventional CATV tuner. However it can easily eliminate the image frequency interference signal of the analog IF signal by equipping an additional 90° phase shifter 17 in the IF signal path. Here, the additional 90° phase shifter 17 can be embodied by using the same as the 90° phase shifter 16. Further a cost problem arising the additional 90° phase shifter 17 will be overcome by fabricating the arrangement on IC chips.

Hereinafter, it will be explained that the image frequency interference signal of the analog IF signal led to the output terminal 19 can be eliminated in the analog broadcasting reception. An image frequency interference signal fI is received on input terminal 11 together with a desired reception signal fR. By using a phase shift type image suppressing mixer an image IF interference signal fIM is reduced on the output terminal 19 for outputting analog IF signals, from the following reason as explained below. Here, it is assumed that the desired reception signal fR is given by $\sin\omega Rt$, a local oscillation signal fL is given by $\sin\omega Lt$, an image frequency interference signal fI of the desired reception signal fR is given by $\sin\omega It$, and mixers are configured to work on conditions given by fL > fR and fI > fL. The mixer 14 then outputs a differential frequency signal fIF1 between the desired reception signal fR and the local oscillation signal fL and also a differential frequency signal fIM1 between the image frequency interference signal fI and the local oscillation signal fL. The differential frequency signal fIF1 is thus expressed as follows.

$$fIF1 = \sin\omega Rt \times \sin\omega Lt$$
$$= -1/2 \times [\cos(\omega R + \omega L)t - \cos(\omega L - \omega R)t)] \quad \cdots (1)$$

Here, if think about only the differential frequency ΔfIF1 for utilizing the mixer as a down-converter, the differential frequency signal fIF1 is expressed as follows.

$$\Delta fIF1 = 1/2 \times \cos(\omega L - \omega R)t \quad \cdots (2)$$

The image frequency signal fIM1 of the output signal of the mixer 13 is expressed as follows.

$$fIM1 = \sin\omega It \times \sin\omega Lt$$

$$= -1/2 \times [\cos(\omega I + \omega L)t - \cos(\omega I - \omega L)t)] \quad \cdots (3)$$

The differential frequency $\Delta fIM1$ of the image frequency signal fIM1 is also expressed as follows.

$$\Delta fIM1 = 1/2 \times \cos(\omega I - \omega L)t \quad \cdots (4)$$

The output of the mixer 14 is delayed by 90° through the 90° phase shifter 17. That is, the output signal of the 90° phase shifter 17 contains the delayed signal fIF1' and delayed image signal fIM1'. The signal fIF1' is expressed as follows.

$$fIF1' = 1/2 \times \cos(\omega L - \omega R + 90') \quad \cdots (5)$$

The image signal fIM1' is also expressed ad follows.

$$fIM1' = 1/2 \times \cos(\omega I - \omega L + 90') \quad \cdots (6)$$

The mixer 13 outputs a signal fIF2 which is a multiple of the 90° delayed signal of the local oscillation signal fL and the first IF signal 12 and also an image signal fIM2. The sinal fIF2 is expressed as follows.

$$fIF2 = \sin(\omega Lt + 90') \times \sin\omega Rt$$

$$= -1/2 \times [\cos(\omega Lt + 90' + \omega Rt)$$

$$- \cos(\omega Lt + 90' - \omega Rt)] \quad \cdots (7)$$

The differential frequency $\Delta fIF2$ of the signal fIF2 is expressed as follows.

$$\Delta fIF2 = 1/2 \times (\cos(\omega Lt + 90' - \omega Rt) \quad \cdots (8)$$

The image signal fIM2 is expressed as follows.

$$fIM2 = \sin\omega It \times \sin(\omega Lt + 90')$$
$$= - 1/2 \times [\cos(\omega It + \omega Lt + 90')$$
$$- \cos(\omega It - (\omega Lt + 90')] \quad \cdots (9)$$

The differential frequency $\Delta fIM2$ of the image signal fIMF2 is also expressed as follows.

$$\Delta fIM2 = 1/2 \times \cos(\omega It - \omega Lt - 90') \quad \cdots (10)$$

The signal fIF led to the output terminal 19 becomes the sum of the output from the 90° phase shifter 17 and the output from the mixer 13, which is obtained by the adder 18. The signal fIF output from the adder 18 is thus expressed as follows.

$$fIF = fIF1' + fIM1' + fIF2 + fIM2$$
$$= 1/2 \times [\cos(\omega Lt - \omega Rt + 90')$$
$$+ \cos(\omega It - \omega Lt + 90')$$
$$+ \cos(\omega Lt - \omega Rt + 90')$$
$$+ \cos(\omega It - \omega Lt - 90')]$$
$$= \cos(\omega Lt - \omega Rt + 90')$$
$$= \cos(\omega IFt + 90')$$
$$= - \sin(\omega IFt) \quad \cdots (11)$$

As seen from the equation (11), the output led on the output terminal 19 is eliminated the image signals fIM1' and fIM2.

FIGURE 2 is a block diagram showing another embodiment of the present invention. In FIGURE 2 the same components as

those shown in FIGURE 1 are assigned with the same reference numerals. A high-frequency reception signal of a desired channel received through a tuner input section 11 of the CATV receiver is selected by an up-converter 12 and then split to two of first higher intermediate frequency (IF) signals 12a, 12b. One of the first higher IF signal 12a is supplied to a first fixed contact 22a of a selector 22 through a first 90° phase shifter 21. Also the first higher IF signal 12a is directly supplied to a second fixed contact 22b of the selector 22. The movable contact of the selector 22 is coupled to one input of a mixer 13. The other split first higher IF signal 12b is directly applied to one input of a mixer 14. One signal 15a of two split oscillation signals 15a, 15b from a local oscillator 15 is directly coupled to a first fixed contact 23a of another selector 23, while the same signal 15a is coupled to a second contact 23b of the selector 23 through a 90° phase shifter 16. The movable contact 23c of the selector 23 is coupled to the other input of the mixer 13. The other split oscillation signal 15b from the local oscillator 15 is directly coupled to the other input of the mixer 14.

The output of the mixer 14 is coupled to a 90° phase shifter 17, while the output of the 90° phase shifter 17 is added with the output of the mixer 13 in an adder 18. Then the sum output of the adder 18 is led to an output terminal 19 for extracting analog IF signals. Both the outputs of the

mixers 13 and 14 are directly led to output terminals 20a and 20b for extracting digital I and Q detection signals, respectively.

The selector 22 selects the output of the 90° phase shifter 21 when the movable contact 22c is switched to the first fixed contact 22a for an analog broadcasting reception. While for a digital broadcasting reception, the movable contact 22c is switched to the second fixed contact 22b to directly receive the first higher IF signal 12a from the up-converter 12. The selector 23 selects the direct path of the split oscillation signal 15 from the local oscillator 15 when the movable contact 23c is switched to the first fixed contact 22a for the analog broadcasting reception. While for a digital broadcasting reception, the movable contact 23c is switched to the second fixed contact 23b of the selector 23 to select the output of the 90° phase shifter 16.

The above embodiment is able to easily remove image frequency interferences in the analog broadcasting reception, only in cost of adding the third 90° phase shifter 17 along the IF signal path, while the arrangement of the embodiment is utilized for the digital broadcasting reception like the conventional arrangement.

FIGURE 3 is a block diagram illustrating still another embodiment of the present invention. This embodiment is different from the former embodiment, as shown in FIGURE 2, in that the selectors 22 and 23 are located in front of the

90° phase shifters 21 and 16.

In the analog broadcasting reception the movable contact 22c of the selector 22 is switched to the fixed contact 22a and the movable contact 23c of the selector 23 is switched to the fixed contact 22b. While in the digital broadcasting reception the movable contact 22c of the selector 22 is switched to the fixed contact 22b and the movable contact 23c of the selector 23 is switched to the fixed contact 23b. Accordingly, the selector 22 selects the output of the 90° phase shifter 21 in the analog broadcasting reception, while the selector 22 selects the output signal 12a of the up-converter 12 in the digital broadcasting reception. The selector 23 selects the oscillation signal 15a of the local oscillator 15 in the analog broadcasting reception, while the selector 23 selects the output of the 90° phase shifter 16 in the digital broadcasting reception.

Accordingly, the third embodiment of the present invention can also eliminate the image frequency interferences in the analog broadcasting reception in the same manner as explained for the second embodiment, as shown in FIGURE 2. Thus the third embodiment is able to prevent the signal deterioration caused by the image frequency interference.

As described above, the present invention can provide an extremely preferable television receiver compatible to both the analog broadcasting reception and the digital

broadcasting reception, which can effectively eliminate the signal deterioration caused by the image frequency interference which is troublesome in the analog broadcasting reception, by simply adding a 90° phase shifter along the analog IF signal path.

While there have been illustrated and described what are at present considered to be preferred embodiments of the present invention, it will be understood by those skilled in the art that various changes and modifications may be made, and equivalents may be substituted for elements thereof without departing from the true scope of the present invention. In addition, many modifications may be made to adapt a particular situation or material to the teaching of the present invention without departing from the central scope thereof. Therefor, it is intended that the present invention not be limited to the particular embodiment disclosed as the best mode contemplated for carrying out the present invention, but that the present invention includes all embodiments falling within the scope of the appended claims.

The foregoing description and the drawings are regarded by the applicant as including a variety of individually inventive concepts, some of which may lie partially or wholly outside the scope of some or all of the following claims. The fact that the applicant has chosen at the time of filing of the present application to restrict the claimed scope of protection in accordance with the following claims is not to

be taken as a disclaimer or alternative inventive concepts that are included in the contents of the application and could be defined by claims differing in scope from the following claims, which different claims may be adopted subsequently during prosecution, for example, for the purposes of a divisional application.

WHAT IS CLAIMED IS:

1. A television receiver characterized by that it is provided with:

means for splitting a reception signal to a first signal and a second signal;

first and second mixers for receiving the split reception signals from the splitting means to their one inputs, respectively;

a local oscillator for outputting first and second local oscillation signals;

means for providing the first local oscillation signal to the other input of the first mixer through a 90° phase shifter which shifts the phase by 90° , as well as directly providing the second local oscillation signal to the other input of the second mixer;

first output means for directly extracting outputs from the first and the second mixers; and

second output means for outputting a second output obtained by adding a direct output from the first mixer and the output from the second mixer through another 90° phase shifter.

2. A television receiver characterized by that it is provided with:

means for splitting a reception signal to a first signal

and a second signal;

a first mixer for receiving the first signal to its one input;

a first 90° phase shifter for passing therethrough the second signal at a 90° phase shift from the first signal;

a second mixer for receiving the output of the 90° phase shifter to its one input;

a local oscillator for outputting first and second local oscillation signals to other inputs of the first and second mixers;

a second 90° phase shifter for passing therethrough the output of the first mixer at a 90° phase shift;

first output means for directly extracting outputs from the first and the second mixers; and

second output means for outputting a second output obtained by adding the output of the second 90° phase shifter and the direct output of the second mixer.

3. A television receiver characterized by that it is provided with:

means for splitting a reception signal to a first signal and a second signal;

a first selector for selecting a direct path for directly passing the first signal or an indirect path for passing the first signal via a first 90° phase shifter;

a first mixer for receiving the output from the first

selector to its one input;

a second mixer for receiving the second signal to its one input;

a local oscillator for outputting first and second local oscillation signals to other inputs of the first and second mixers;

a second selector for selecting a direct path for directly passing the first oscillation signal or an indirect path for passing the first oscillation signal via a second 90° phase shifter;

means for applying the output of the second selector to the other input of the first mixer;

means for applying the second local oscillation signal to the other input of the second mixer; and

first output means for directly extracting outputs from the first and the second mixers; and

second output means for outputting a second output obtained by adding the direct output of the first mixer and the output of the second mixer through a third 90° phase shifter.

wherein in case of the reception signal being an analog signal the first selector and the second selector select the indirect path having the first 90° phase shifter and the direct path directly passing the first local oscillation signal respectively, while in case of the reception signal being a digital signal the first selector and the second

selector select the direct path directly passing the first signal and the indirect path having the second 90° phase shifter.

4. A television receiver claimed in claim 3 characterized by that the first selector is located in front of the first 90° phase shifter and the second selector is located in front of the second 90° phase shifter.

5. A television receiver claimed in claim 1, characterized by that the first output means is used as an output for digital detection signal while the adding output is used as an output for analog IF detection signal.

6. A television receiver claimed in claim 2, characterized by that the first output means is used as an output for digital detection signal while the adding output is used as an output for analog IF detection signal.

7. A television receiver claimed in claim 3, characterized by that the first output means is used as an output for digital detection signal while the adding output is used as an output for analog IF detection signal.

8. A television receiver claimed in claim 4, characterized by that the first output means is used as an output for

digital detection signal while the adding output is used as an output for analog IF detection signal.

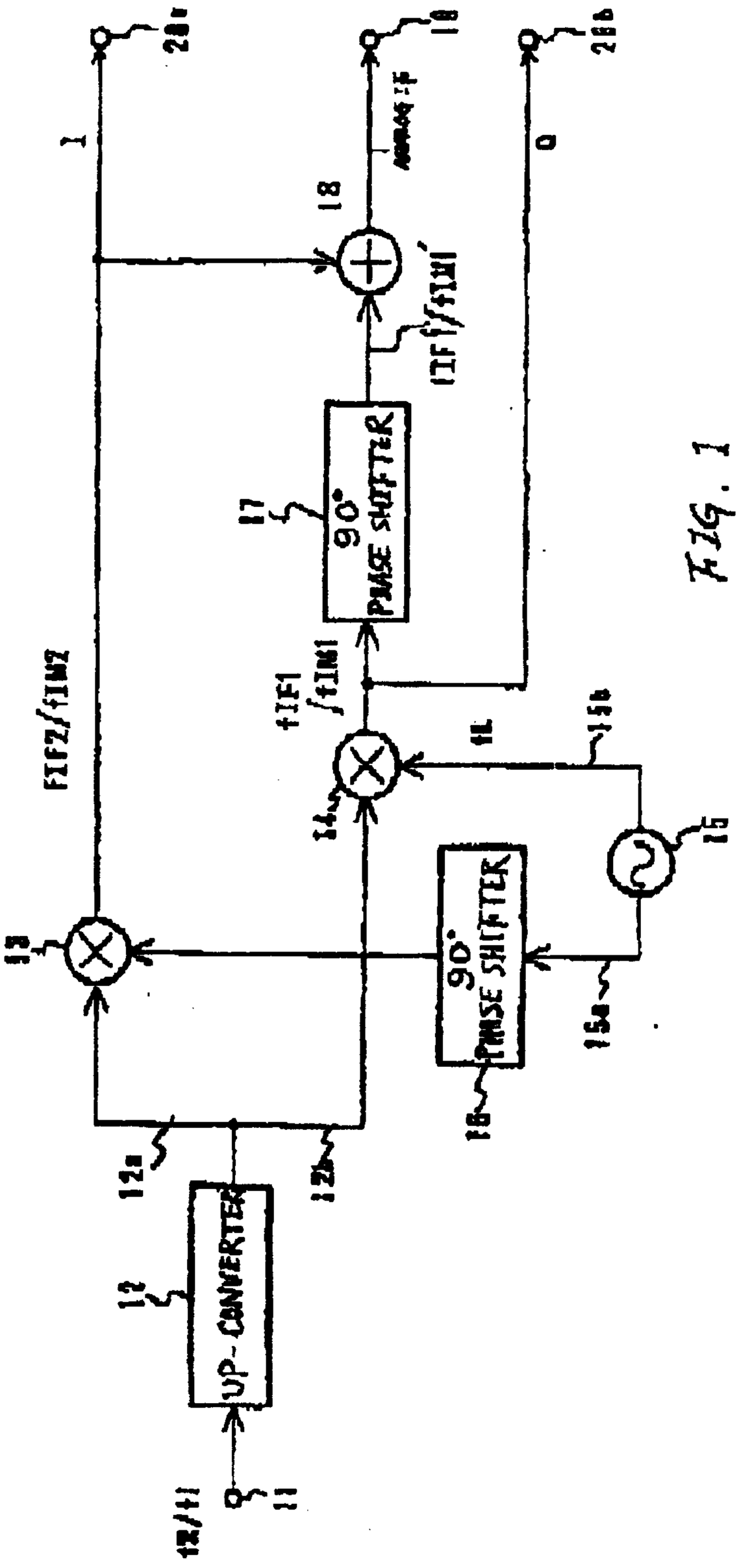
1
28a
18
IF
0
28b
fIF2/fIM2
13
fIF1
/fIM1
17
90°
PHASE SHIFTER
14
11
15b
15
90°
PHASE SHIFTER
15a
16
12a
12b
12
UP-CONVERTER
11

FIG. 1

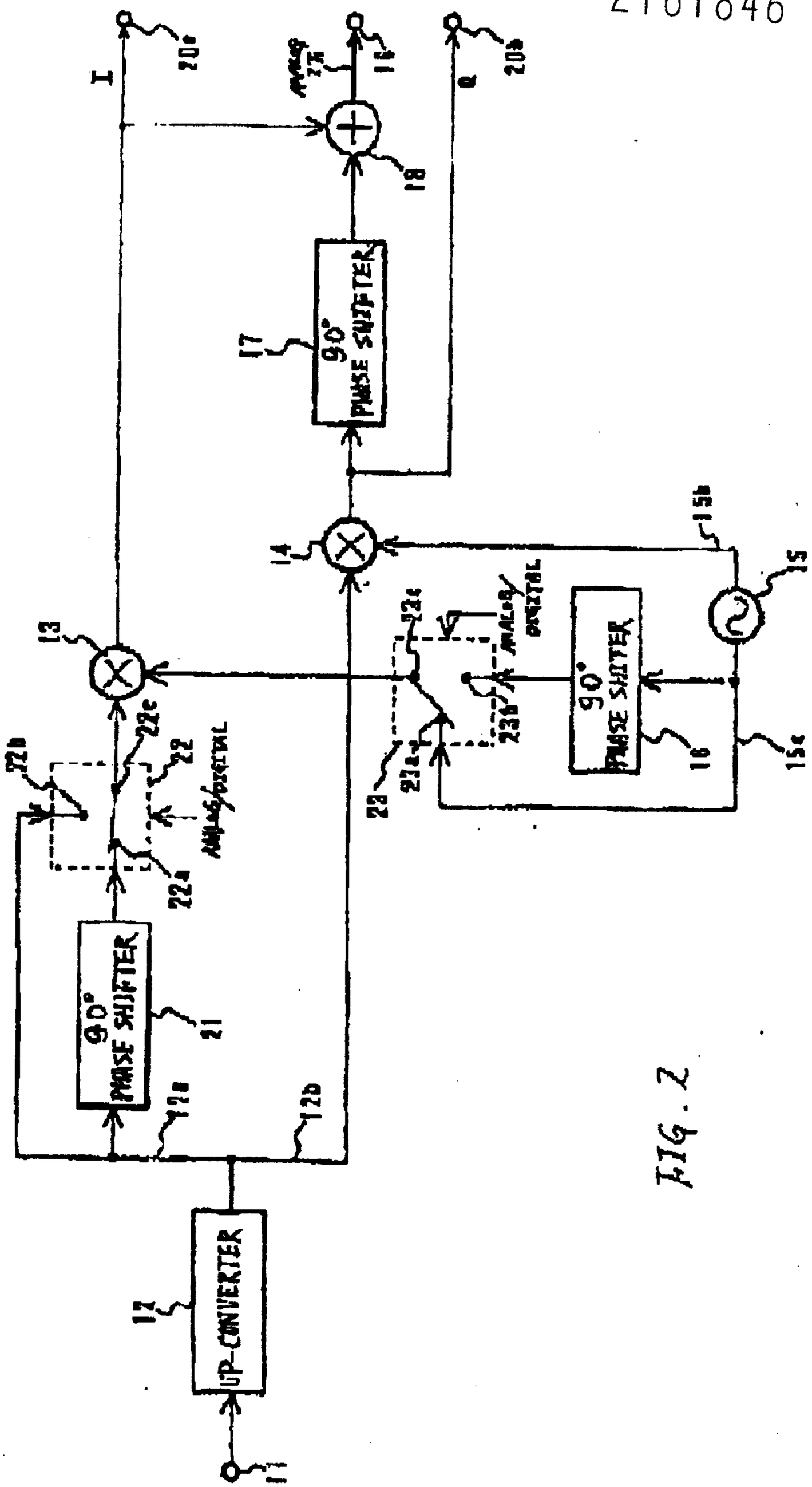
I
20a
Q
20b
18
18a
18b
90° PHASE SHIFTER
17
13
14
15
15a
15b
16
21
22
22a
22b
22c
23
23a
23b
23c
27
27a
28
12
12a
12b
UP-CONVERTER

FIG. 2

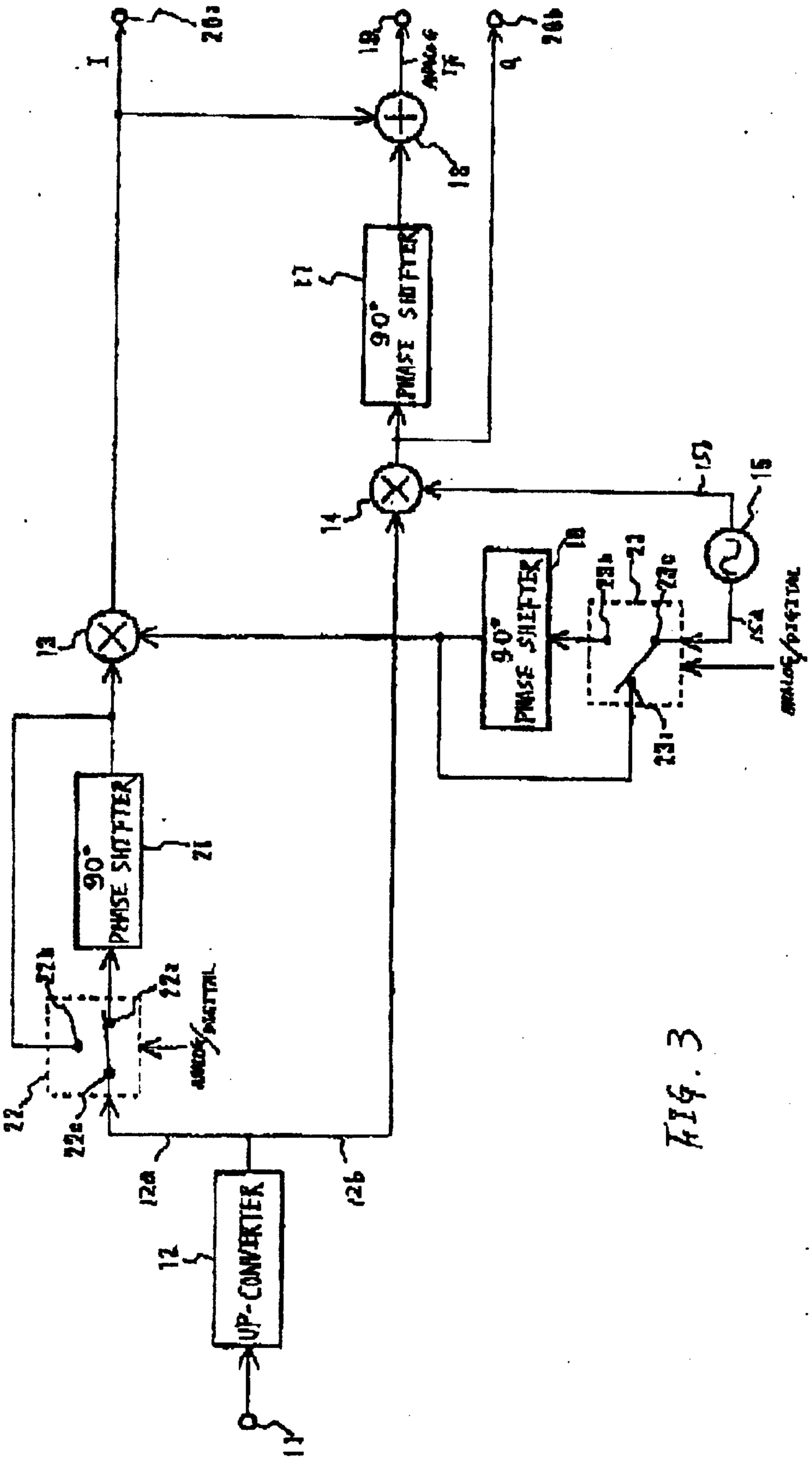
I
20a
18
MIXER
IF
Q
20b
18
17
90° PHASE SHIFTER
14
15
17
MULTIPLIER/MIXER
16
90° PHASE SHIFTER
21
21a
22
22a
22b
MIXER/MODULATOR
12
UP-CONVERTER
24a
24b

FIG. 3

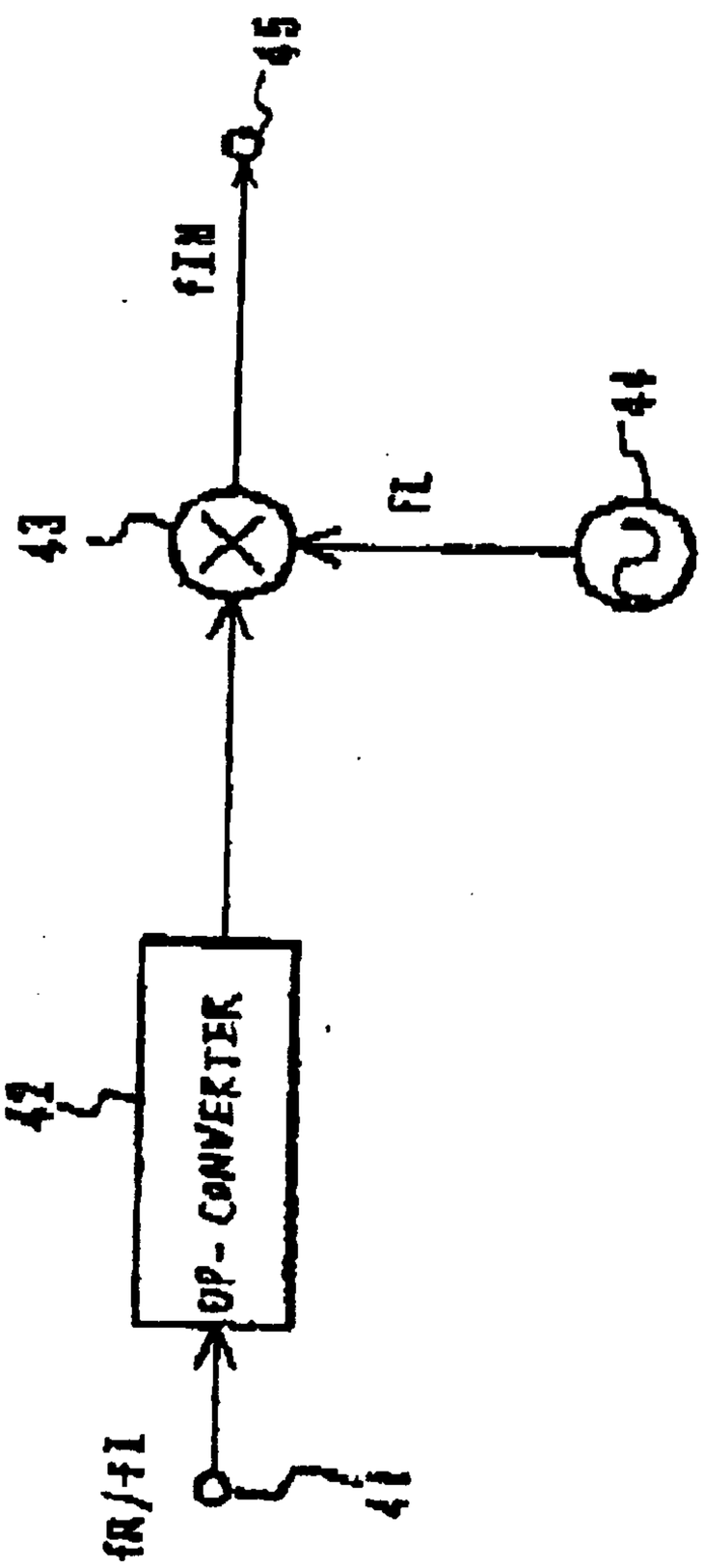

FIG. 4
(PRIOR ART)

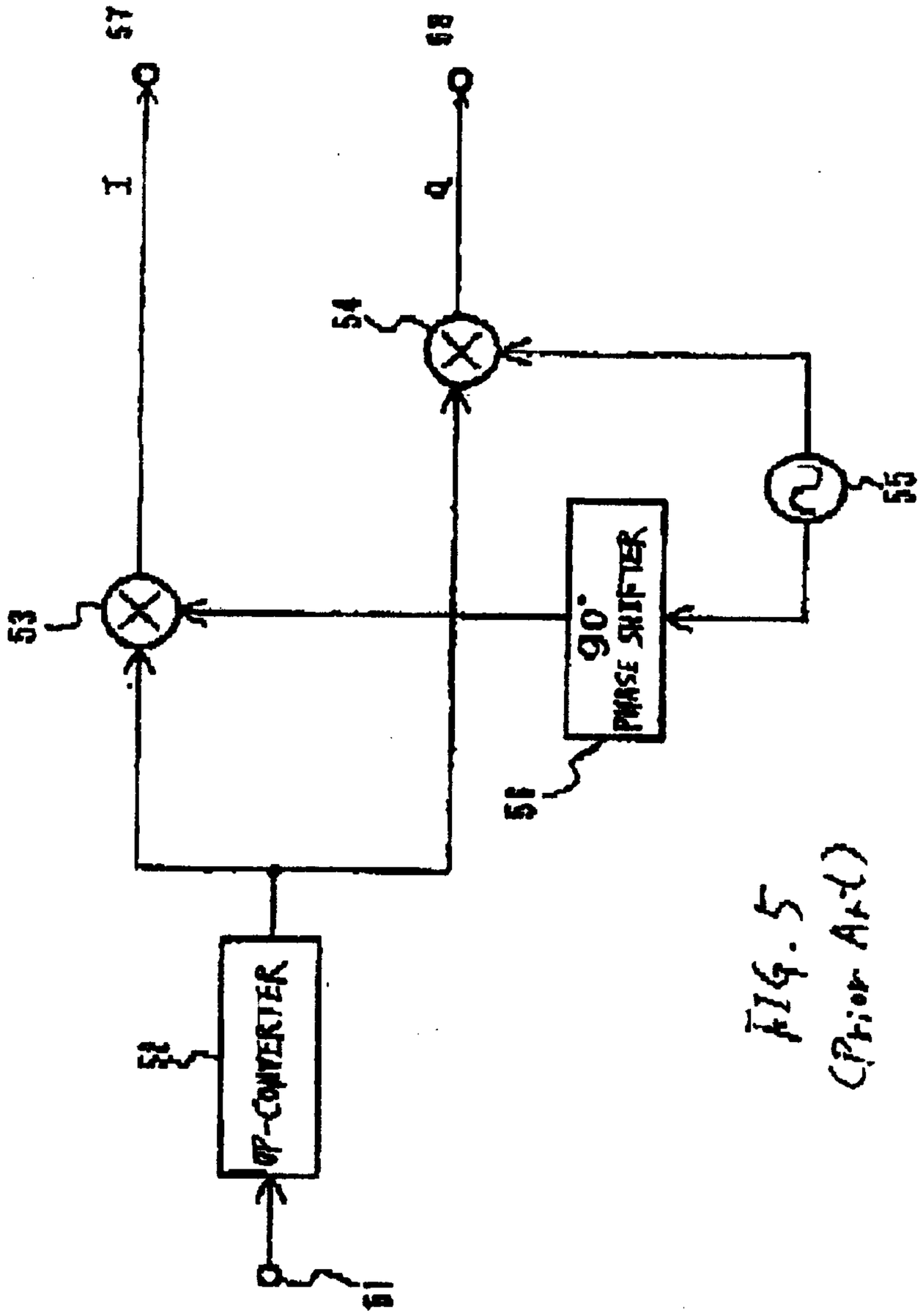

FIG. 5
(Prior Art)

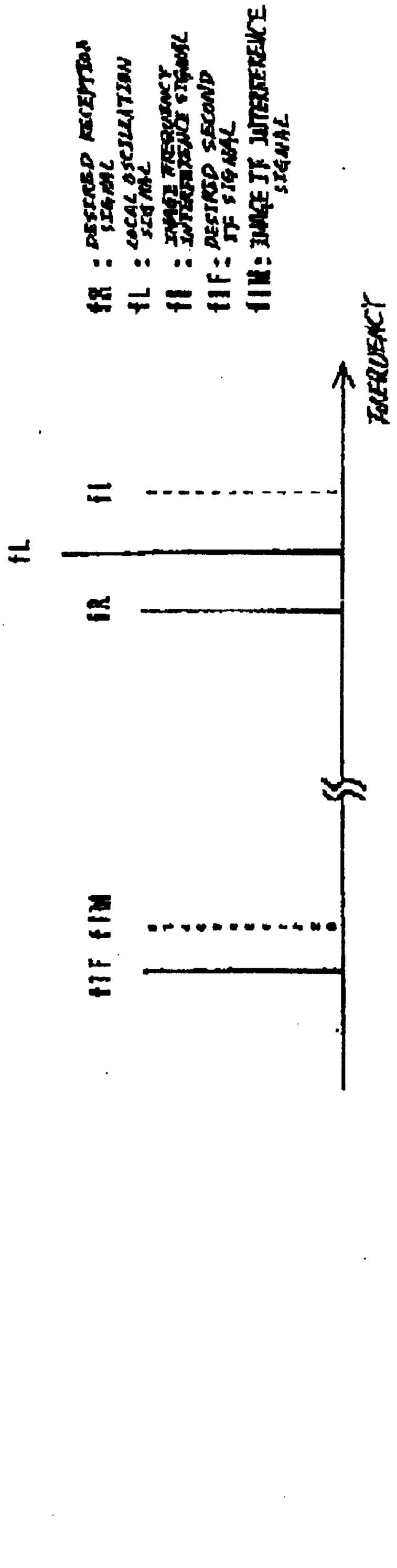

FIG. 6
(Prior Art)

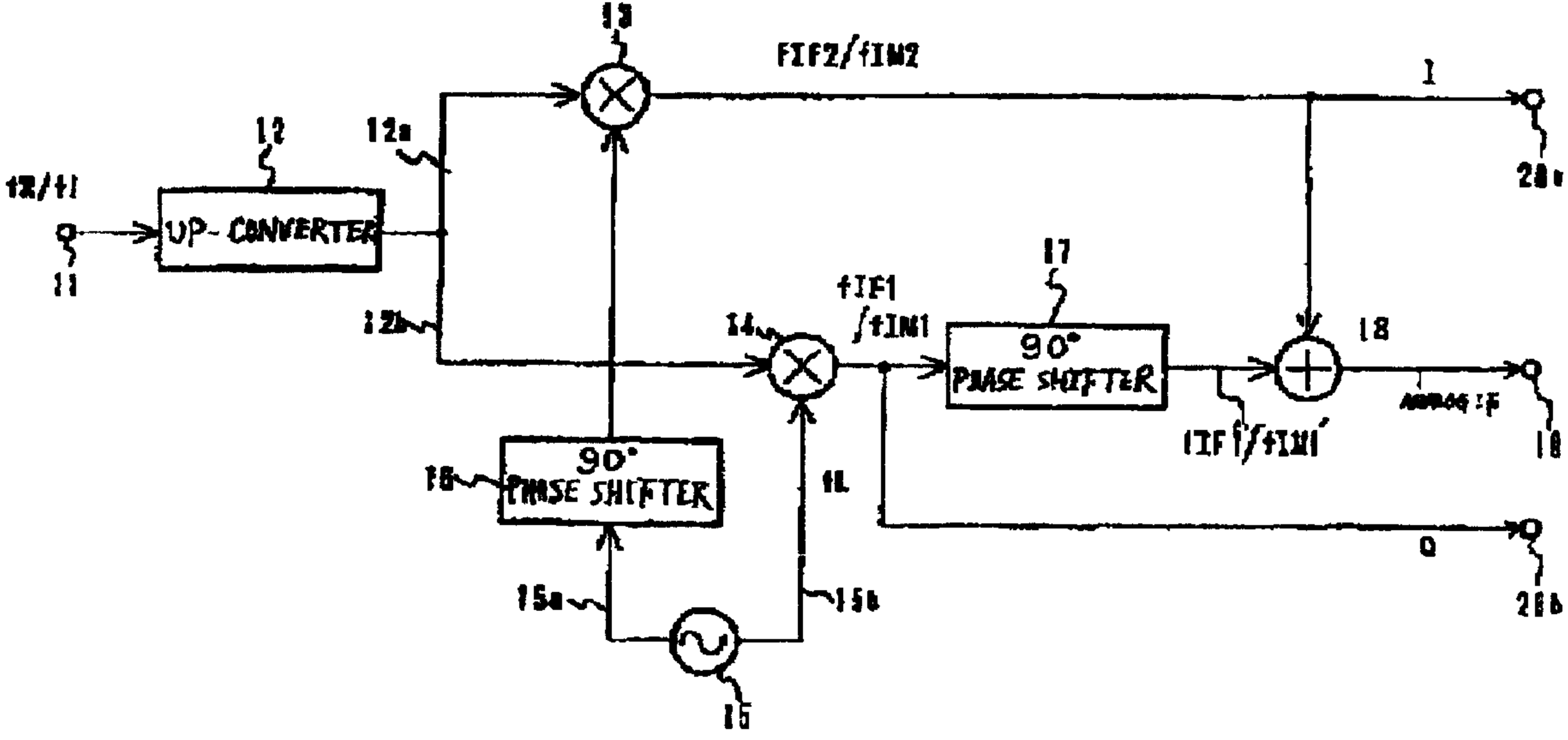

fR/fI
11
12
UP-CONVERTER
12a
12b
13
FIF2/fIM2
I
20a
14
fIF1
/fIM1
17
90°
PHASE SHIFTER
18
IIF1/fIM1
ANALOG IF
19
16
90°
PHASE SHIFTER
fL
Q
20b
15a
15b
15