(12) INTERNATIONAL APPLICATION PUBLISHED UNDER THE PATENT COOPERATION TREATY (PCT)

(19) World Intellectual Property Organization
International Bureau

(43) International Publication Date
03 January 2019 (03.01.2019)

WIPO | PCT

(10) International Publication Number
WO 2019/006204 A1

(51) International Patent Classification:
G01R 31/00 (2006.01) *H02J 7/04* (2006.01)
G01R 31/02 (2006.01)

(21) International Application Number:
PCT/US2018/040140

(22) International Filing Date:
28 June 2018 (28.06.2018)

(25) Filing Language: English

(26) Publication Language: English

(30) Priority Data:
62/527,834 30 June 2017 (30.06.2017) US

(71) Applicant: **TESLA, INC.** [US/US]; 3500 Deer Creek Rd., Palo Alto, California 94304 (US).

(72) Inventors: **MARTIN, Nathaniel**; 1504 Verdi Street, Alameda, California 94501 (US). **MITROS, Ania**; 275 Chiquita Ave., Mountain View, California 94501 (US). **MELLONE, Charles**; 83 Orchard Ave., Redwood City, California 94061 (US). **DIMEN, Ian**; 122 Panoramic Way, Berkeley, California 94704 (US).

(74) Agent: **NORTH, Michael**; NORTH WEBER & BAUGH LLP, 3260 Hillview Ave., First Floor, Palo Alto, California 94304 (US).

(81) Designated States *(unless otherwise indicated, for every kind of national protection available)*: AE, AG, AL, AM, AO, AT, AU, AZ, BA, BB, BG, BH, BN, BR, BW, BY, BZ, CA, CH, CL, CN, CO, CR, CU, CZ, DE, DJ, DK, DM, DO, DZ, EC, EE, EG, ES, FI, GB, GD, GE, GH, GM, GT, HN, HR, HU, ID, IL, IN, IR, IS, JO, JP, KE, KG, KH, KN, KP, KR, KW, KZ, LA, LC, LK, LR, LS, LU, LY, MA, MD, ME, MG, MK, MN, MW, MX, MY, MZ, NA, NG, NI, NO, NZ, OM, PA, PE, PG, PH, PL, PT, QA, RO, RS, RU, RW, SA, SC, SD, SE, SG, SK, SL, SM, ST, SV, SY, TH, TJ, TM, TN, TR, TT, TZ, UA, UG, US, UZ, VC, VN, ZA, ZM, ZW.

(84) Designated States *(unless otherwise indicated, for every kind of regional protection available)*: ARIPO (BW, GH, GM, KE, LR, LS, MW, MZ, NA, RW, SD, SL, ST, SZ, TZ, UG, ZM, ZW), Eurasian (AM, AZ, BY, KG, KZ, RU, TJ, TM), European (AL, AT, BE, BG, CH, CY, CZ, DE, DK, EE, ES, FI, FR, GB, GR, HR, HU, IE, IS, IT, LT, LU, LV, MC, MK, MT, NL, NO, PL, PT, RO, RS, SE, SI, SK, SM, TR), OAPI (BF, BJ, CF, CG, CI, CM, GA, GN, GQ, GW, KM, ML, MR, NE, SN, TD, TG).

(54) Title: MULTI-CHANNEL AND BI-DIRECTIONAL BATTERY MANAGEMENT SYSTEM

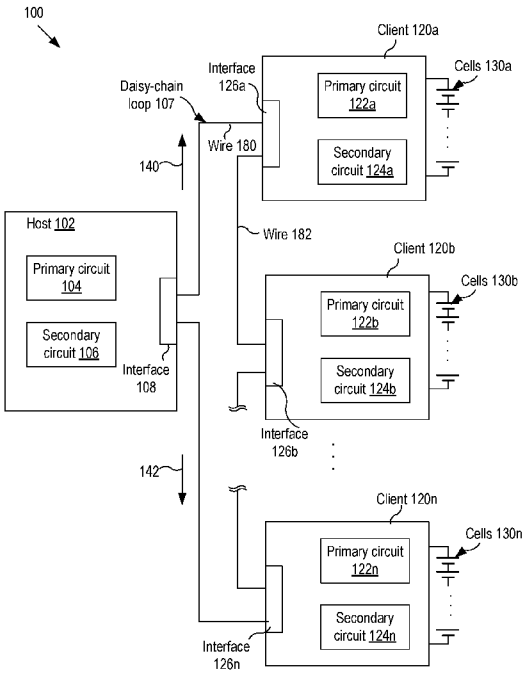

FIG. 1

(57) Abstract: Embodiments of the present invention include a battery management system that provide a plurality of channels that allow communication between host and clients. This communication may operate in bi-directional modes such that commands from the host and responses from the clients are transmitted clockwise or counter-clockwise around a daisy-chain loop. This architecture provides both a high level of redundancy across multiple channels as well as transmission directions around the loop. The use of multiple channels provides a separation in signal paths akin to the provision of completely separate physical wires, preventing malfunction of spurious operation of devices using one channel from interfering with the normal operation of devices using the other channel. In addition, the signaling architecture allows a host to dynamically transmit commands and receive responses between specific client(s) and host or broadcast communication across all clients.

WO 2019/006204 A1

[Continued on next page]

Published:
— *with international search report (Art. 21(3))*

MULTI-CHANNEL AND BI-DIRECTIONAL BATTERY MANAGEMENT SYSTEM

CROSS-REFERENCE TO RELATED APPLICATIONS

[0001] This application claims the priority benefit under 35 USC § 119(e) to U.S. Patent Application No. 62/527,834, filed on June 30, 2017, entitled "MULTI-CHANNEL AND BI-DIRECTIONAL BATTERY MANAGEMENT SYSTEM," (Atty. Docket No. 20150-2147P), listing as inventors Nathaniel Martin, Ania Mitros, Charles Mellone, Ian Dimen, which application is incorporated by reference herein in its entirety and for all purposes.

BACKGROUND

A. Technical Field

[0002] The present invention relates to a closed loop signaling architecture for the management of battery cells within a system, and more particularly, to battery management systems and methods that provide bi-directional signaling and redundant paths across a plurality of serially-coupled battery modules.

B. Description of the Related Art

[0003] The importance of battery-based power systems within today's markets is well understood by one of skill in the art. These battery systems are replacing traditional power systems in a number of different markets as products are moving towards more environmentally-friendly and cost-effective power solutions. For example, markets such as the electrical vehicle and home energy markets are experiencing rapid growth as battery powered systems are becoming more dynamic in their ability to store and deliver power to corresponding products. This movement away from traditional power sources (e.g., fossil fuels, coal, etc.) to battery-based power sources is placing higher performance demands on

the management of battery cells to ensure proper operation within ever-increasing complex products.

[0004] Many battery-based power systems have a centralized management controller that communicates with multiple battery management integrated circuits. Each of these battery management integrated circuits manages a plurality of battery cells and performs various tasks. For example, a battery management integrated circuit may sense voltage and charge levels on battery cells, may manage charge by bleeding charge or re-charging cells, as well as perform other sensing operations and low-level battery management functions. Battery management systems should also be sufficiently robust to effectively address interference issues within the battery system, provide appropriate electrical isolation between various components as well as power domains, and be able to compensate for failure events within the system and other features known to one of skill in the art.

[0005] In the case of electric vehicles, the battery management system may be subject to mechanical vibration and shock, varying environmental temperature, multiple power domains and a large number of interference sources that may deteriorate signals between the centralized management controller and multiple battery integrated circuits. These problems may create issues in the viability of traditional battery management systems being ported into electric vehicles. These problems are compounded by the fact that the battery system oftentimes functions as the only power source for the vehicle, and a failure within the battery system will result in rendering the automobile inoperable.

[0006] Accordingly, what is needed is battery management systems that provide more robust and dynamic management of battery cells.

BRIEF DESCRIPTION OF THE DRAWINGS

[0007] References will be made to embodiments of the invention, examples of which may be illustrated in the accompanying figures. These figures are intended to be illustrative, not limiting. Although the invention is generally described in the context of these embodiments, it should be understood that it is not intended to limit the scope of the invention to these particular embodiments.

[0008] Figure 1 shows a schematic diagram of a battery management system according to embodiments of the present disclosure.

[0009] Figure 2A shows exemplary signals in one communication channel according to embodiments of the present disclosure.

[0010] Figure 2B shows exemplary signals in another communication channel according to embodiments of the present disclosure.

[0011] Figure 3 shows a schematic diagram of a client according to embodiments of the present disclosure.

[0012] Figure 4 shows a schematic diagram of a splitter according to embodiments of the present disclosure.

[0013] Figure 5 shows a schematic diagram of a data sequence received by a host according to embodiments of the present disclosure.

[0014] Figure 6 shows the flow of a command signal in a daisy-chain loop according to embodiments of the present disclosure.

[0015] Figure 7 shows the flow of response signals in a daisy-chain loop according to embodiments of the present disclosure.

[0016] Figure 8 shows the flow of a command signal in a daisy-chain loop according to embodiments of the present disclosure.

[0017] Figure 9 shows the flow of response signals in a daisy-chain loop according to embodiments of the present disclosure.

[0018] Figure 10 shows a schematic diagram of a data sequence received by a host according to embodiments of the present disclosure.

[0019] Figure 11 shows a schematic diagram of a client according to embodiments of the present disclosure.

[0020] Figure 12 shows a flowchart of an illustrative process for communicating data in a battery management system according to embodiments of the present invention.

[0021] Figure 13 shows a flowchart of an illustrative process for communicating data in a battery management system according to embodiments of the present invention.

DETAILED DESCRIPTION OF THE PREFERRED EMBODIMENTS

[0022] In the following description, for purposes of explanation, specific details are set forth in order to provide an understanding of the invention. It will be apparent, however, to one skilled in the art that the invention can be practiced without these details. Furthermore, one skilled in the art will recognize that embodiments of the present invention, described below, may be implemented in a variety of ways, such as a process, an apparatus, a system, a device, or a method on a tangible computer-readable medium.

[0023] Components shown in diagrams are illustrative of exemplary embodiments of the invention and are meant to avoid obscuring the invention. It shall also be understood that throughout this discussion that components may be described as separate functional units, which may comprise sub-units, but those skilled in the art will recognize that various components, or portions thereof, may be divided into separate components or may be integrated together, including integrated within a single system or component. It should be noted that functions or operations discussed herein may be implemented as components or nodes. Components may be implemented in software, hardware, or a combination thereof.

[0024] Furthermore, connections between components within the figures are not intended to be limited to direct connections. Rather, data between these components may be modified, re-formatted, or otherwise changed by intermediary components or devices. Also, additional or fewer connections may be used. It shall also be noted that the terms "coupled" "connected" or "communicatively coupled" shall be understood to include direct connections, indirect connections through one or more intermediary devices, and wireless connections.

[0025] Furthermore, one skilled in the art shall recognize: (1) that certain steps may optionally be performed; (2) that steps may not be limited to the specific order set forth herein; and (3) that certain steps may be performed in different orders, including being done contemporaneously.

[0026] Reference in the specification to "one embodiment," "preferred embodiment," "an embodiment," or "embodiments" means that a particular feature, structure, characteristic, or function described in connection with the embodiment is included in at least one embodiment of the invention and may be in more than one embodiment. The appearances of the phrases "in one embodiment," "in an embodiment," or "in embodiments" in various places in the specification are not necessarily all referring to the same embodiment or embodiments.

[0027] The use of certain terms in various places in the specification is for illustration and should not be construed as limiting. A service, function, or resource is not limited to a single service, function, or resource; usage of these terms may refer to a grouping of related services, functions, or resources, which may be distributed or aggregated.

[0028] According to various embodiments of the invention, a battery management system is disclosed having multi-channel and bi-directional signaling procedures are employed to improve the performance and redundancy of the system. A master-slave architecture is used such that a host (e.g., a microcontroller) that manages the batteries at a system level by communicating with a plurality of low level battery management integrated circuits that directly manage battery cells. These signaling procedures allow commands and responses to travel in either a clockwise or counter-clockwise direction across a closed-loop transmission path that serially couples the low-level battery management integrated circuits.

[0029] In various embodiments, the transmission path is able to communicate commands and responses on multiple channels that allow a host to address multiple separate and redundant systems of multiple clients in a variety of communication protocols. For example, a first channel may communicate commands/responses within a first frequency band(s) to a first system of clients and a second channel may communicate commands/responses within a second frequency band(s) to as second system of clients to reduce interference between the two channels and achieve effective separation of the two systems of clients and therefore achieve a higher level of functional redundancy than if client systems shared the same channel on the communication medium. Furthermore, in certain embodiments, the communication protocols may vary across the channels such that a first channel allows the microcontroller to uniquely address a battery management integrated circuit with a specific command while a second channel allows the microcontroller to broadcast a command to all of the battery management integrated circuits and receive responses from each. This signaling method and architecture provides redundancy within the battery management system by allowing multi-channel communication paths between microcontroller and multiple separate and completely functionally redundant systems of battery management integrated circuits. These and other advantages will be apparent to one of skill in the art in light of the discussion below.

[0030] Figure 1 shows a schematic diagram of a battery management system **100** according to embodiments of the present invention. The battery management system **100** may include a host **102** (such as a microcontroller that manages at a system level) and clients **120a – 120n** (such as battery management integrated circuits that manage battery cells within

the system). It is noted that other possible arrangements and implementations of the host **102** and clients **120** may be used in the present disclosure. In embodiments, the host **102** may be implemented in various structures including the previously mentioned microcontroller and manages the system by transmitting commands and receiving responses from one or more of the clients **120**. Each client **120** may monitor and control corresponding battery cells to measure the electrical and physical status of the cells, such as voltage, amount of remaining electrical charge and temperature of each cell. For instance, the client **120a** may monitor the cells **130a**. It is noted that each client **120** may monitor different number of battery cells. The client **120a** may perform measurements (e.g., voltage, charge, temperature, etc.) as well as perform certain functions (e.g., bleed-off charge from a battery cell, etc.) One skilled in the art will recognize that various implementations and architectures of the battery management system shall fall within the present scope of this disclosure.

[0031] The host **102** and each client **120** may communicate commands and responses via a daisy-chain transmission path loop **107**, where the daisy-chain loop **107** may include a pair of wires that transmits electrical signals therethrough. In certain instances, this communication may use differential signaling. In embodiments, the daisy-chain loop **107** may connect the interface **108** of the host **102** to the interfaces **126a – 126n** of the clients **120a – 120n** in series so that communication may serially occur on one or multiple channels within the loop **107**.

[0032] The daisy-chain loop **107** may use two or more communication channels where each channel communicates signals in different frequency ranges to parallel, separate systems of battery management clients. To simplify the discussion, the following discussion focuses on a system that has only two channels, a first channel (corresponding to a primary signal) and second channels (corresponding to a secondary signal), even though other suitable number of communication channels may be used in embodiments of the present invention. As discussed below, the host **102** may include a primary circuit **104** and a secondary circuit **106** that process the signals communicated through the first and second channels, respectively. Likewise, each of the clients **120** may include a primary circuit **122** and a secondary circuit **124** that process the signals communicated through the first and second channels, respectively, and of which each client system alone is capable of providing the full complement of battery management functions necessary for safe and continued system operation. The primary circuit **104** processes responses received from one or more of the clients **120** on a first channel within the system. In certain examples, this primary circuit **104** functions as receiver circuitry for the first channel while in other examples the primary circuit

104 functions as a transceiver that receives and transmits signals on the first channel. In examples, the secondary circuit **106** functions as receiver circuitry for the second channel while in other examples the secondary circuit **106** functions as a transceiver that receives and transmits signals on the second channel.

[0033] The battery management system **100** is able to provide redundant communication paths because of its ability to bi-directionally communicate along the daisy-chain loop **107** and because the two channels used on the daisy chain loop each allow access to completely separate and redundant battery management systems. Specifically, the host **102** is able to communicate in a clockwise direction **140** around the serially connected clients **120** as well as communicate in a counter-clockwise direction **142** along the loop **107**. This bi-directionality allows the host **102** to communicate with each client **120** in case there is a single failure within the daisy-chain loop **107**. This redundancy applies to both channels and will be explained in more detail below.

[0034] Figure 2A and 2B illustrate examples of signaling characteristics that may be used across different channels within the battery management system **100**. Figure 2A shows exemplary signals in one communication channel according to embodiments of the present disclosure. Figure 2B shows exemplary signals in another communication channel according to embodiments of the present disclosure. In embodiments, the signals in Figures 2A and 2B may be transmitted simultaneously by the host **102** through the daisy-chain loop **107** and each client **120** may separate two signals. In other embodiments, the signals in Figures 2A and 2B may be transmitted in a time multiplexed approach according to various embodiments of the invention. In these examples, the range of the signal frequency P1 in Figure 2A may not overlap the range of the signal frequencies S1 (and S2) in Figure 2B so that the signals can be separated and processed, i.e., the battery management system **100** may have frequency-division multiplexed channels along the transmission loop **107**. It is noted that various types of signal shapes may be used in the two channels.

[0035] Referring to Figure 2A, a depicted balanced serial signal is illustrated having a first frequency or frequencies corresponding to the P1 Hz value, for example a 5MHz signal. In certain embodiments, this balanced serial signal is communicated within the first channel of the system and is able to uniquely address one or more clients within the plurality of clients **120**. One skilled in the art will recognize that various communication protocols may be used in the implementation of embodiments of the invention. Comparably, Figure 2B is an FSK signal in which data is communicated within the second channel using a plurality of frequencies or frequency bands corresponding S1 Hz and S2 Hz. One skilled in the art will

recognize that a large number frequencies or frequency bands may be used in the FSK modulation technique. In certain examples, the lowest frequency employed in the second channel is 15 MHz, which would provide sufficient frequency separation to minimize interference between the two channels. One skilled in the art will also recognize that various encoding techniques (e.g., Manchester encoding) may also be used in either or both of the channels. In certain embodiments, the FSK signal is a broadcast signal that is intended for each of the clients **120** to perform a certain function and respond to the host **102**. The host **102** is able to associate a response to a particular client **120** based on the sequence or time-window in which the response is received, which will be described in greater detail below.

[0036] Figure 3 shows a schematic diagram of a client **300** according to embodiments of the present disclosure. As depicted, the client **300** may include an interface **302** for receiving and sending signals; a splitter **304** for separating the incoming signal into first and second channel signals; a primary circuit **306** for processing the first channel signal; and a secondary circuit **308** for processing the second channel signal. This splitter architecture achieves a high level of functional redundancy by providing a separation between primary and secondary signal paths akin to the provision of separate sets of wires for primary and secondary circuitry. The effectively physical separation of the communication channels by passive circuitry before the signals meet the primary and secondary battery monitoring circuitry mean that even in cases of malfunction, the primary circuitry cannot interfere with normal operation of the secondary circuitry, and vice versa.

[0037] In embodiments, both the primary circuit **306** and the secondary circuit **308** may monitor the cells **320** and send the monitored information to the host **102** in response to the command signal. Hereinafter, the terms "response" and "response signal" refer to the information monitored and transmitted by the circuits **306** or **308**. In embodiments, the primary circuit **306** may send a response signal to the host **102** if the host, more specifically, the primary circuit **104** of the host, sends a primary command signal through the first channel. Likewise, the secondary circuit **308** may send a response signal to the host if the host, more specifically, the secondary circuit **106**, sends a secondary command signal through the second channel. In one example, the host **102** may send a command to each client **120** to transmit voltage sensor readings that are stored within memory in the client **120**. In another example, the host may send a command to each client **120** to take a voltage measurement on each cell **130** and transmit those measurements back to the host **102**. One skilled in the art will recognize that various commands and responses may be communicated within the system **100**.

[0038] One skilled in the art will recognize that each client **102** will differentiate signals between channels and route channels to appropriate processing circuitry **306**, **308**. For example, the splitter **304** may receive a signal comprising a plurality of channels and split each channel out from the received signal. In certain embodiments, the splitter **304** may employ filters that output on certain frequency bands corresponding to certain channels. One skilled in the art will recognize that the filters may be integrated within the splitter or may be discrete circuitry within the system **100**.

[0039] The primary and secondary circuits **306**, **308** have corresponding circuitry employed on the host **102** such as those shown as a primary circuit **104** and a secondary circuit **106** in Fig. 1. The functionality of these circuits **104**, **106** is similar to those described relative to the clients in that this circuitry is intended to process communication occurring in specific channels. In addition, the system **100** may also employ isolation elements that electrically isolate various components to avoid interference and current leakage. These isolation elements may be located between clients **120** or between clients **120** and host **102** in which different power domains are employed.

[0040] Figure 4 shows a schematic diagram of a splitter according to embodiments of the present invention. As described, the splitter **304** may include a low frequency filter **404** that passes the low frequency signal of the first channel and a high frequency filter **402** that passes the high frequency signal of the second channel. The low and high frequency signals may be input to and processed by the circuits **306** and **308**, respectively. The transformer **441** may isolate the client **300** from the device that is coupled to the other end of the wire **330**. It is noted that other suitable electronic circuit may be used in place of the transformer **441** such as photo-couplers or capacitors.

[0041] As shown in this Figure, a signal is received from the daisy-chain loop **107** at client **300**. The signal is split into a first channel using a low frequency filter **404** having two inductors in parallel and a capacitor that will block the high frequency component on the signal and pass the low frequency component, corresponding to the first channel. Comparatively, a second channel uses a high frequency filter **402** having two capacitors in parallel and an inductor that will block the low frequency component on the signal and pass the high frequency component, correspond to the second channel. One skilled in the art will recognize that the specific designs of the high and low pass filters may vary from application to application, all of which are intended to fall within the scope of embodiments of the invention.

[0042] One skilled in the art will recognize the use of a multi-channel signaling system as well as a bi-directional signaling architecture within the battery management system **100** results in dynamic redundancy across the system itself. For example, if a primary or secondary circuit should fail on a client **120**, the host **102** may communicate a redundant command to the client **120** using a different and fully operational channel. The multiple channel architecture ensures that even egregious malfunction of a sub-system, such as the transmission of spurious data, will not be able to interfere with normal operation of a complementary subsystem operating on a different channel. In addition, the bi-directionality of the system allows for compensation to occur in the event of a complete path failure somewhere within the loop **107**.

[0043] Referring back to Figure 1, in embodiments, the host **102** may send a command signal in two different directions **140** and **142**, i.e., the host **102** may operate in a bi-directional mode. In each direction, the host **102** may send command signals through at least one of the two communication channels. For instance, the primary circuit **104** of the host **102** may send a first command signal through the interface **108** and the secondary circuit **106** may send a second command signal through the interface **108** in the direction **140**. Similarly, the primary circuit **104** of the host **102** may send a first command signal through the interface **108** and the secondary circuit **106** may send a second command signal through the interface **108** in the direction **142**.

[0044] In embodiments, the first command signal may request one of the clients to send a response signal to the host **102**. For instance, the host **102** may send a first command signal in the first direction **140**, where the first command signal requests the client **102b** to send a response to the host. If one of the wires (or traces) **180** and **182** is broken, the client **120b** may not receive the command signal, and as a consequence, the host **102** may not receive any response from the client **120b**. In this scenario, the host **102** may send the first command signal in the second direction **142** and receive the response from the client **120b**. However, the host **102** may not still be able to identify the exact location of the failure since the host cannot determine which of the two wires (or traces) **180** and **182** is broken or which specific device has failed.

[0045] A broadcast command signal to all of the clients **120** may provide more visibility into where a failure has occurred. To identify the failure of the daisy-chain loop **107**, in embodiments, the host **102** may send second command signal may request all of the clients to send response signals to the host. Because the particular channel broadcasts a command to all of the clients **120**, the host **102** can associate each response with a particular

client based on the time or location (e.g., response window) of the particular response relative to all of the other responses. Figure 5 shows a schematic diagram of a data sequence **500** received by a host according to embodiments of the present disclosure. As shown, a broadcast command A is transmitted from the host **102**. Each client transmits a response to the command which appear as a series of responses to the host **102**. The sequential location of each response can then be associated with each client **102** based on its location within the daisy-chain transmission loop. If a failure occurs, only a subset of responses will be received by the host **102**, which will allow the host to at least approximate where the failure occurred. The host **102** can re-transmit the command in the opposite direction to ensure other clients **120** receive the command as well as confirm where the failure is located within the loop **107**. Figure 6 shows the flow of a command signal, command A, in the daisy-chain loop **107** in a clockwise direction according to embodiments of the present disclosure. Figure 7 shows the flow of response signals in the daisy-chain loop **107** in a counter-clockwise direction according to embodiments of the present disclosure.

[0046] Providing more details depicted in Figures 5 - 7, the host **102** may send a second command signal, command A, in the first direction **140**, where the second command signal may request all of the clients **120** to send responses to the host. In response to the command signal, each client (e.g. **120i)** may send a response signal (e.g. response i) to an adjacent client (e.g. **120i-1**) in the second direction **142** and send the command signal to an adjacent client (e.g. **120j**) in the first direction **140**. Also, each client (e.g. **120i**) may receive a response signal (e.g. response j) from an adjacent client (e.g. **120j**) in the second direction **142** and send the response signal (e.g. response j) to an adjacent client (e.g. **120i-1**) in the second direction **142**. In embodiments, the responses from the clients **120** may sequentially arrive at the host **102**, as depicted in Figure 5.

[0047] If the daisy-chain loop **107** does not have any defect, the host **102** may the responses from all of the clients **120**. However, if the wire between the clients **120i** and **120j** is broken, as depicted in Figure 6, only the clients **120a – 120i** may send response signals to the host. Since the host **102** cannot receive the responses from the clients **120j – 120n**, the host **102** may send another command signal along the direction **142**, requesting all of the clients **120a – 120n** to send responses to the host.

[0048] Figure 8 shows the flow of the command signal, command B, in the daisy-chain loop **107** according to embodiments of the present disclosure. Figure 9 shows the flow of response signals in the daisy-chain loop **107** according to embodiments of the present disclosure. Figure 10 shows a schematic diagram of a data sequence **1000** received by the

host **102** according to embodiments of the present disclosure. As depicted in Figures 8 - 10, the responses from only the clients **120n – 120j** may arrive at the host since the clients **120a – 120i** cannot receive the command or send responses due to the defect in the daisy-chain loop **107**. By comparing the data sequences **500** and **1000**, the host **102** may determine that the wire (or wire connection) between the clients **120i** and **120j** is defective.

[0049] It is noted that the host **102** can identify the failure by sending the second command signals in the bi-directional mode, where each second command signal requests all of the client **120** to send response to the host **102**. Also, the bi-directional mode may allow the host **102** to receive the responses from all of the clients **120,** even if the daisy-chain loop **107** is broken. If the daisy-chain loop **107** does not have any defect, the host **102** may receive two sets of responses, where each set of responses include responses from all of the client **120**.

[0050] Figure 11 shows a schematic diagram of a client **1100** according to embodiments of the present disclosure. As depicted, the client **1100** may be similar to the client **300**, with the difference that the client **1100** has two primary circuits **1106** and **1110** and two secondary circuits **1108** and **1112**. In embodiments, the primary circuit **1106** may be isolated from the primary circuit **1110** by a transformer **1140** and the second circuit **1108** may be isolated from the secondary circuit **1112** by a transformer **1142**. It is noted that other suitable electronic circuit may be used in place of the transformers **1140** and **1142**.

[0051] In embodiments, the primary circuit **1106** and the secondary circuit **1108** may monitor the cells **1130**, and the primary circuit **1110** and the secondary circuit **1112** may monitor the cells **1132**. It is noted that the client **1100** may include more than two primary (and/or secondary) circuits to monitor additional number of cells, where the primary (and secondary) circuits may be arranged in series and separated by transformers to isolate the neighboring primary (and secondary) circuits. As such, the client **1100** can scale to support various numbers of battery cells by integrating circuitry within the client **1100**.

[0052] Figure 12 shows a flowchart **1200** of an illustrative process for communicating data in the battery management system **100** according to embodiments of the present invention. The host **102** may generate a command that includes a plurality of command signals, where each of the command signals uses a communication channel at a frequency (step **1202**). In embodiments, the command may include two command signals that use the first and second communication channels associated with signals in Figured 2A and 2B, respectively. The host **102** may transmit the command to the clients **120** through the daisy-chain loop **107** in a first direction **140** (step **1204**). At each client **120**, the command may be

split into a plurality of command signals by the splitter **304** and a plurality of response signals corresponding to the plurality of command signals may be transmitted to the host through the daisy-chain loop **107** in a second direction **142** (step **1206**). Also, at each client **120**, the command may be transmitted to a first adjacent client along the first direction **140** through the daisy-chain loop **107**. In addition, each client **120** may receive a response signal from the first adjacent client in the daisy-chain loop **107** and transmit the received response signal to a second adjacent client (step **1208**).

[0053] Figure 13 shows a flowchart **1300** of an illustrative process for communicating data in the battery management system **100** according to embodiments of the present invention. The host **102** may transmit a first command to the clients **120** through the daisy-chain loop **107** in a first direction **140**, where the first command requests all of the clients **120** to send responses to the host (step **1302**). Each client may transmit the first command to an adjacent client through the daisy-chain loop **107** in the first direction **140** and transmit a response to the host **102** through the daisy-chain loop **107** in a second direction **142** (step **1304**). Then, it is determined whether the host **102** receives response signals from all of the clients **120** (step **1306**). If the answer to the decision at step **1306** is positive, the process stops (step **1308**). Otherwise, the host **102** may send a second command to the clients **120** through the daisy-chain loop **107** in the second direction **142** (step **1308**). Each client may transmit the second command to an adjacent client through the daisy-chain loop **107** in the second direction **142** and transmit a response signal to the host **102** through the daisy-chain loop **107** in the first direction **140** (step **1310**).

[0054] It will be appreciated to those skilled in the art that the preceding examples and embodiment are exemplary and not limiting to the scope of the present invention. It is intended that all permutations, enhancements, equivalents, combinations, and improvements thereto that are apparent to those skilled in the art upon a reading of the specification and a study of the drawings are included within the true spirit and scope of the present invention.

What is claimed is:

1. A redundant battery management system comprising:
a first client coupled within a multi-channel, bi-directional and daisy-chained communication loop, the first client manages a first plurality of battery cells and comprises:
a first interface coupled to the communication loop;
a first splitter coupled to received data from the first interface and to split the data across at least two outputs on the first splitter;
a first primary circuit coupled to receive at least a first portion of the data from a first output of the first splitter and to transmit data on a first channel within the communication loop;
a first secondary circuit coupled to receive at least a second portion of the data from a second output of the first splitter and to transmit data on a second channel within the communication loop;
a second client coupled to the communication loop, the second client manages a second plurality of battery cells and comprises:
a second interface coupled to the communication loop;
a second splitter coupled to received data from the second interface and to split the data across at least two outputs on the second splitter;
a second primary circuit coupled to receive the at least first portion of the data from a first output of the second splitter and to transmit data on the first channel within the communication loop;
a second secondary circuit coupled to receive the at least second portion of the data from a second output of the second splitter and to transmit data on a second channel within the communication loop; and
a host coupled to the communication loop, the host manages a plurality of clients comprising at least the first and second clients.

2. The system of claim 1 wherein the at least second portion of the data is a redundant copy of the at least first portion of the data.

3. The system of claim 1 wherein the at least first portion of the data is specifically addressed to at least one client within the plurality of clients and the at least second portion of the data is broadcast to the plurality of clients.

4. The system of claim 1 wherein the first splitter comprises a first filter that separates and transmits the at least first portion of the data from the data received from the communication loop, the at least first portion of the data being communicated on a first channel.

5. The system of claim 4 wherein the first splitter further comprises a second filter that separates and transmits the at least second portion of the data from the data received from the communication loop, the at least second portion of the data being communicated on a second channel.

6. The system of claim 1 further comprising an isolation element coupled between the first client and the communication loop, the isolation element isolates the first client from the communication loop.

7. The system of claim 6 wherein the isolation element comprises a transformer.

8. The system of claim 1 wherein the host communicates with the plurality of clients using a frequency division multiplexed signaling architecture that employs a balanced serial signal protocol.

9. The system of claim 1 wherein the host communicates with the plurality of clients using a frequency division multiplexed signaling architecture that employs FSK modulation.

10. The system of claim 1 wherein the first client device measures and transmits at least one physical or electrical measurement associated with the first plurality of battery cells in response to a request from the host received from the communication link.

11. The system of claim 1 wherein the first client device performs at least one function on the first plurality of battery cells in response to a request from the host received from the communication link.

12. A method for identifying a failure location within a battery management system, the method comprising:

transmitting a first request from a host to a first client within a plurality of clients, the request being transmitted on a first channel and in a first direction on a bi-directional and multi-channel communication path coupling the plurality of clients in a daisy-chained architecture;

receiving a frequency division multiplexed signal at the first client, the frequency division multiplexed signal comprising the first channel;

filtering the first channel from the frequency division multiplexed signal at the first client;

processing the first request within the first channel at the first client; and

transmitting a response related to the first request from the first client to the host on the bi-directional and multi-channel communication path, the response being transmitted in a second channel within the multi-channel communication path.

13. The method of claim 12 wherein the first and second channels are the same channel.

14. The method of claim 12 further comprising the step of re-transmitting the first request in a third channel within the multi-channel communication path in response to failing to receive the response from the first client at the host.

15. The method of claim 12 further comprising the step of re-transmitting the first request in a second direction in the bi-directional communication path in response to failing to receive the response from the first client at the host.

16. The method of claim 15 further comprising the step of identifying a failure point within the communication path based on an analysis of the first request transmitted in the first direction of the bi-directional communication path and the first request transmitted in the second direction of the bi-directional path.

17. The method of claim 12 wherein the processing of the first request at the first client comprises performing a physical or electrical measurement on at least one battery cell within a plurality of battery cells managed by the first client.

18. The method of claim 12 wherein the processing of the first request at the first client comprises performing a function on at least one battery cell within a plurality of battery cells managed by the first client.

19. A method for managing a plurality of daisy-chained clients within a battery management system, the method comprising:

transmitting a first plurality of requests to the plurality of daisy-chained clients in at least one channel within a plurality of channels in a bi-directional and multi-channel communication loop, each of the requests within the first plurality of requests being specifically addressed to at least one client within the plurality of clients;

transmitting a second plurality of requests to the plurality of daisy-chained clients in a broadcast channel within the plurality of channels in the bi-directional and multi-channel communication loop, the second plurality of requests being broadcasted to the plurality of clients and the broadcast channel being distinct from the at least one channel; and

awaiting, at a host, a first plurality of responses corresponding to the first plurality of requests and a second plurality of responses corresponding to the second plurality of requests.

20. The method of claim 19 wherein the second plurality of requests within the broadcast channel is generated in response to failing to receive a response within the first plurality of responses associated within the first plurality of requests specifically addressed to the at least one client.

21. The method of claim 20 wherein a failure location within the communication loop is identified based on an analysis of the second plurality of responses corresponding to the broadcasted second plurality of requests.

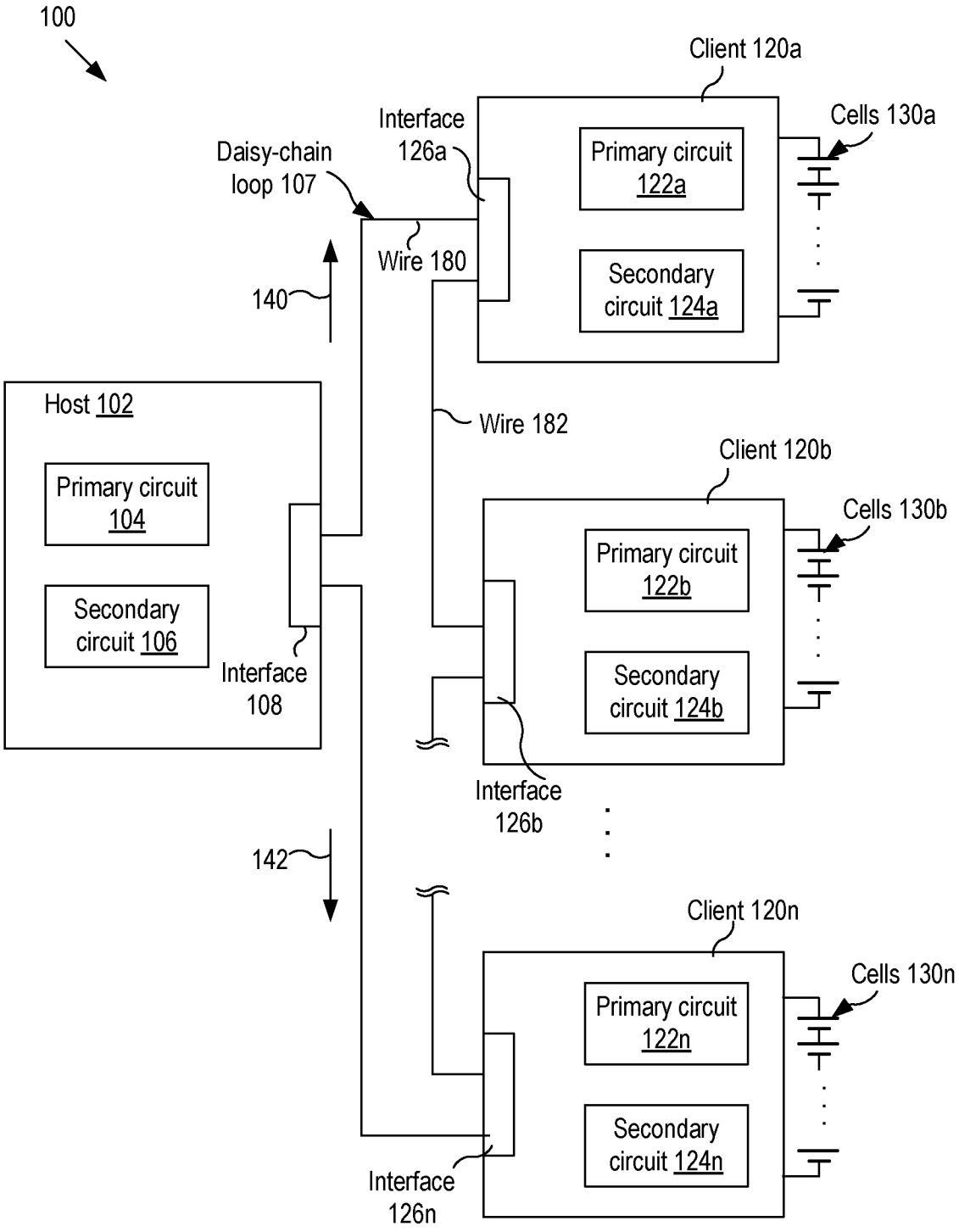
100
Client 120a
Interface 126a
Cells 130a
Daisy-chain loop 107
Primary circuit 122a
Wire 180
Secondary circuit 124a
140
Host 102
Wire 182
Client 120b
Primary circuit 104
Cells 130b
Primary circuit 122b
Secondary circuit 106
Secondary circuit 124b
Interface 108
Interface 126b
142
Client 120n
Cells 130n
Primary circuit 122n
Secondary circuit 124n
Interface 126n

FIG. 1

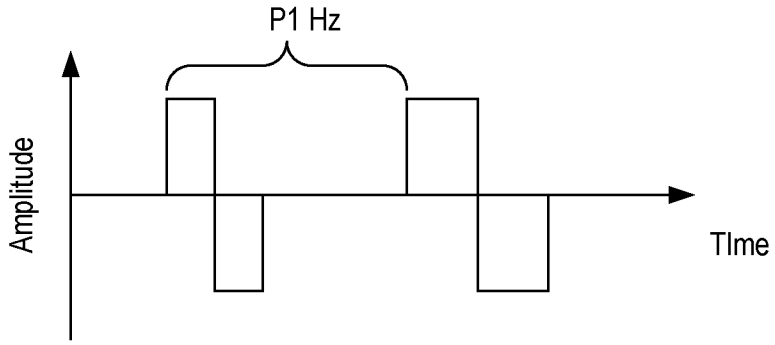

FIG. 2A

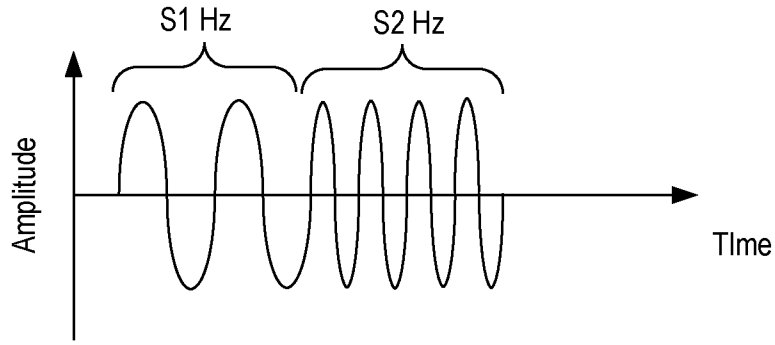

FIG. 2B

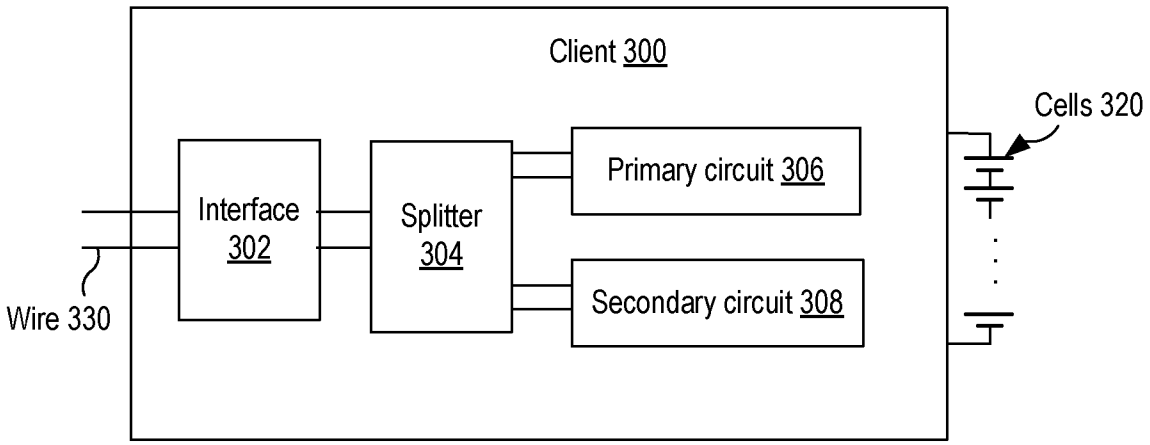
Client 300
Cells 320
Interface 302
Splitter 304
Primary circuit 306
Secondary circuit 308
Wire 330

FIG. 3

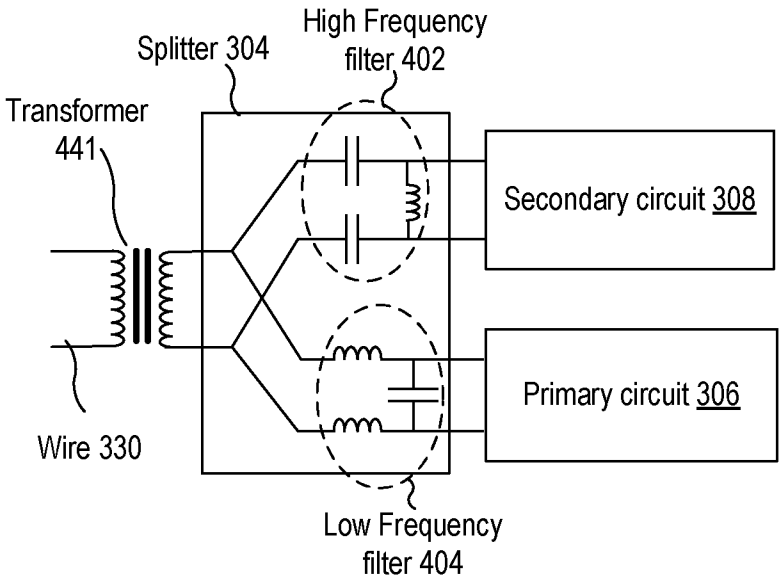
Splitter 304
High Frequency filter 402
Transformer 441
Secondary circuit 308
Primary circuit 306
Wire 330
Low Frequency filter 404

FIG. 4

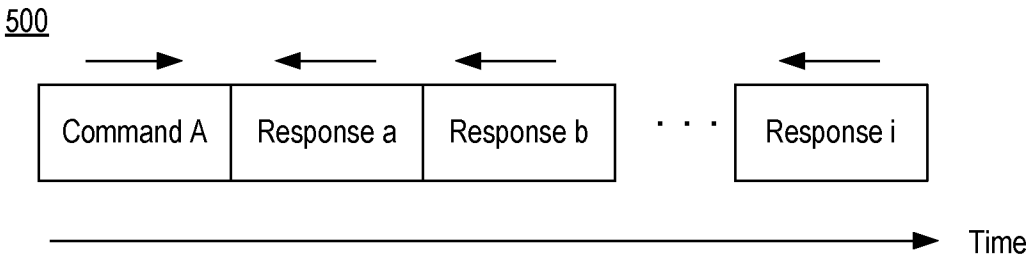

FIG. 5

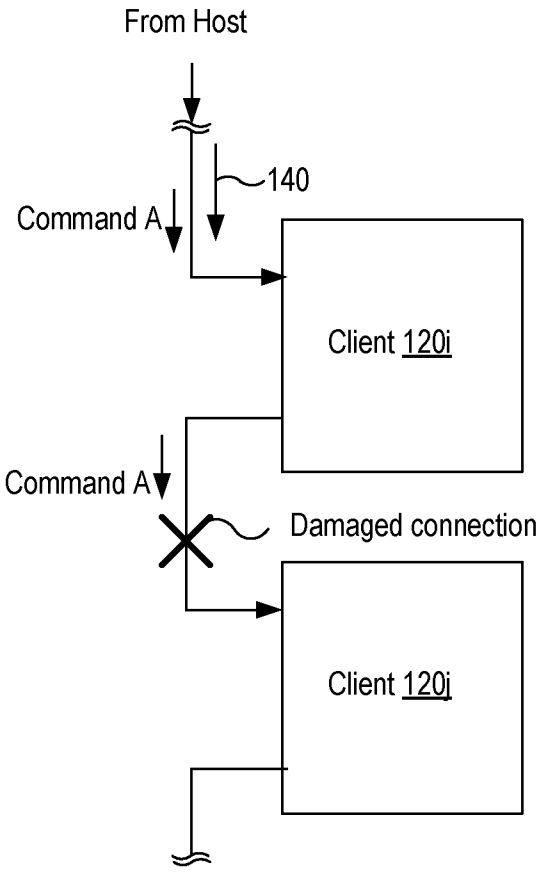

FIG. 6

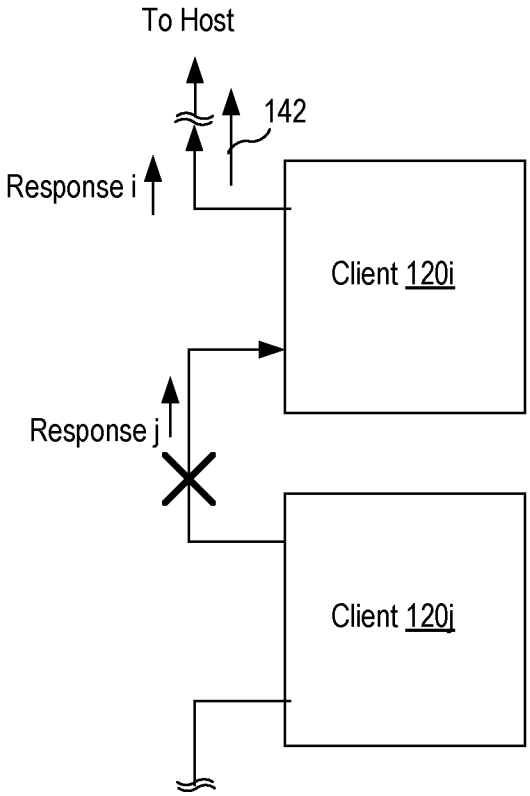

FIG. 7

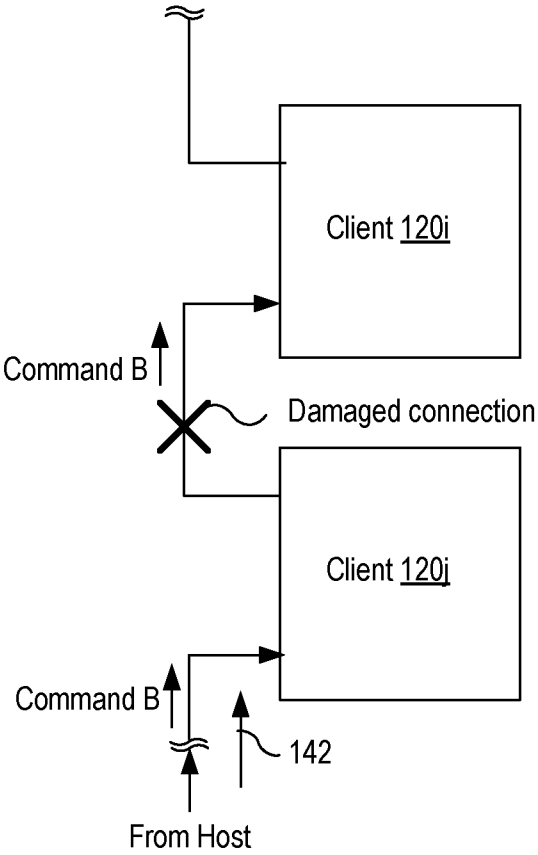

FIG. 8

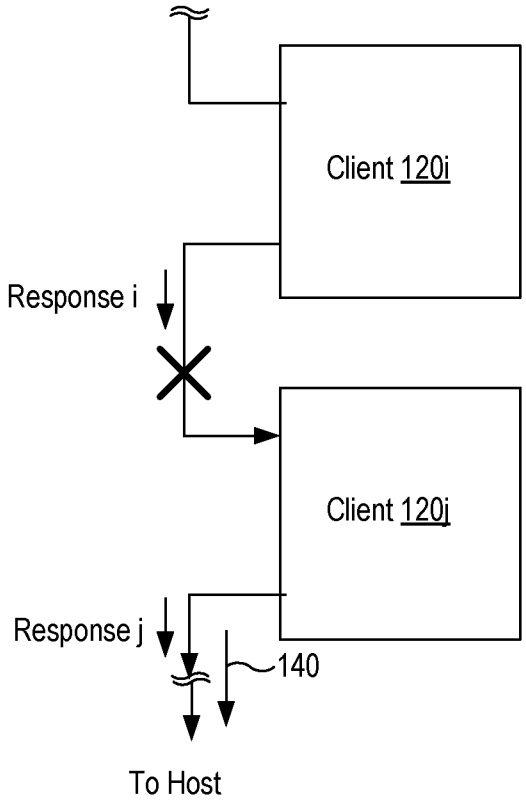

FIG. 9

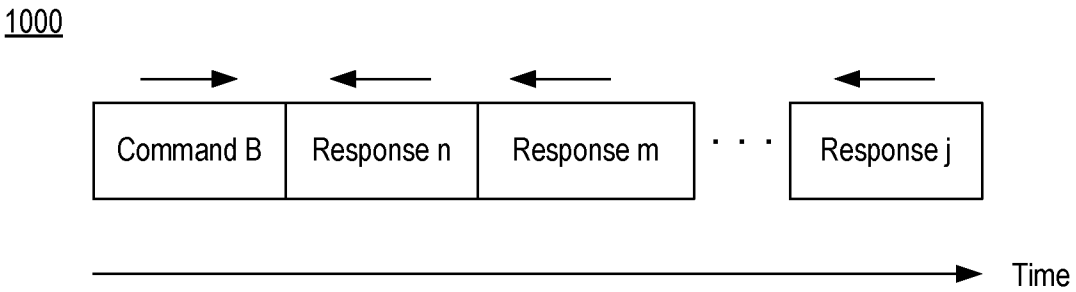

FIG. 10

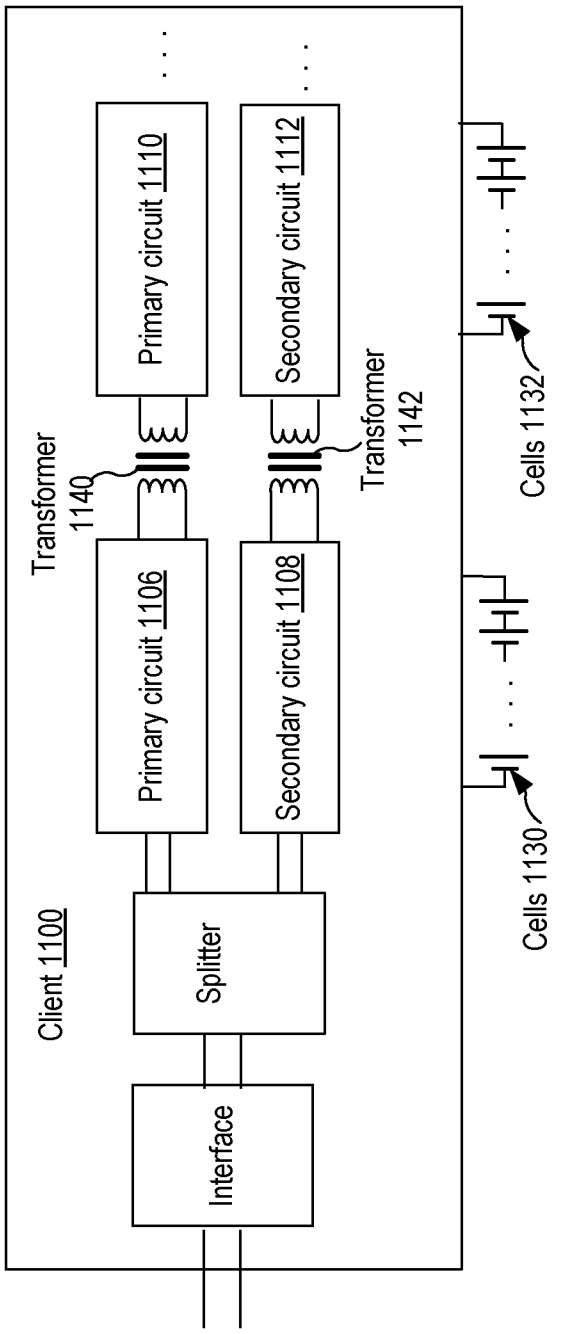
Client 1100
Interface
Splitter
Primary circuit 1106
Secondary circuit 1108
Primary circuit 1110
Secondary circuit 1112
Transformer 1140
Transformer 1142
Cells 1130
Cells 1132

FIG. 11

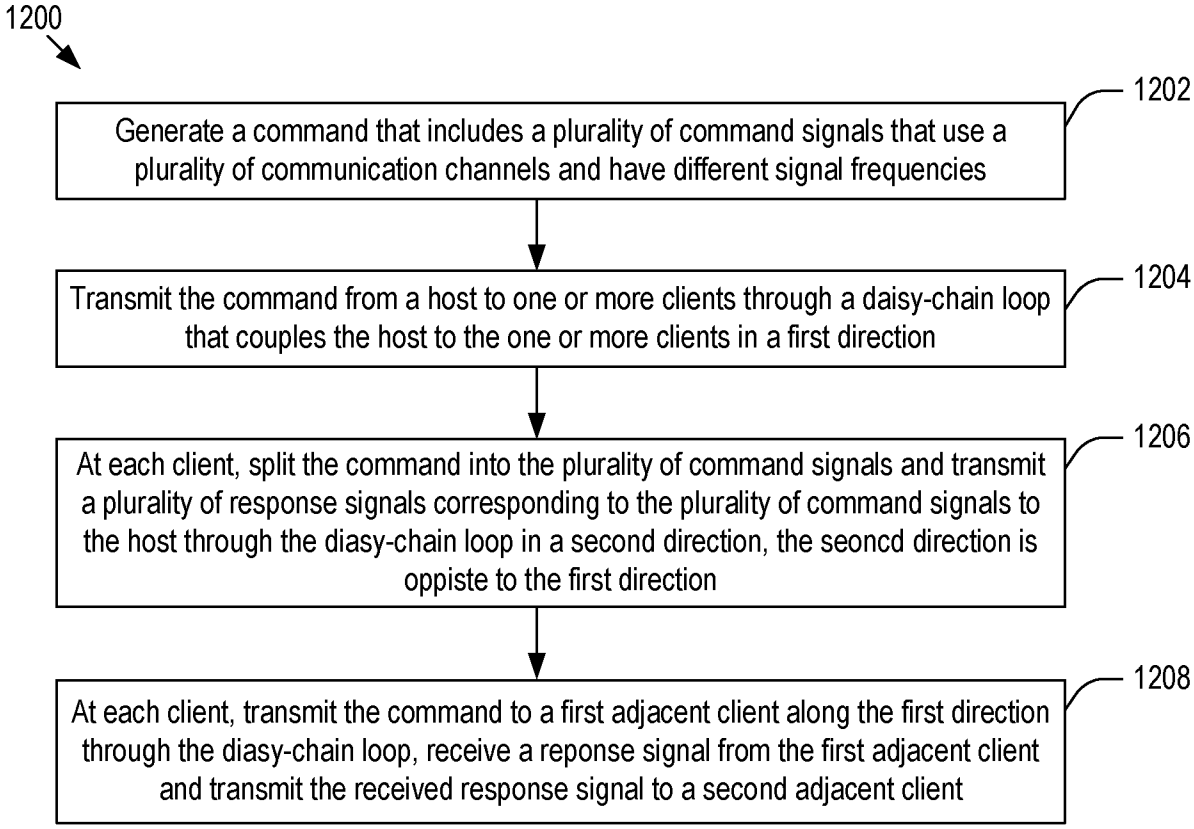
1200
Generate a command that includes a plurality of command signals that use a plurality of communication channels and have different signal frequencies
1202
Transmit the command from a host to one or more clients through a daisy-chain loop that couples the host to the one or more clients in a first direction
1204
At each client, split the command into the plurality of command signals and transmit a plurality of response signals corresponding to the plurality of command signals to the host through the diasy-chain loop in a second direction, the seoncd direction is oppiste to the first direction
1206
At each client, transmit the command to a first adjacent client along the first direction through the diasy-chain loop, receive a reponse signal from the first adjacent client and transmit the received response signal to a second adjacent client
1208

FIG. 12

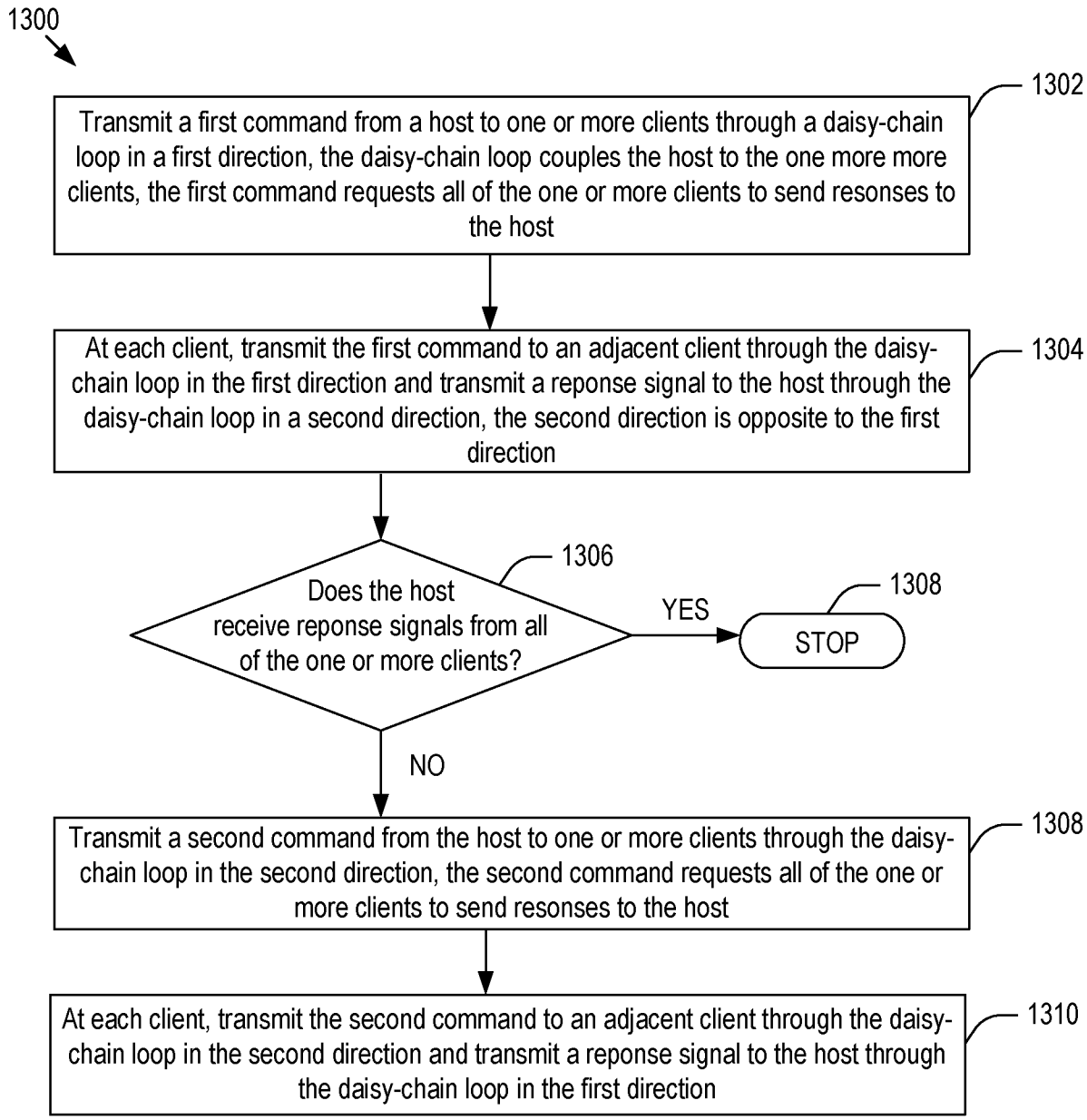
1300
1302
Transmit a first command from a host to one or more clients through a daisy-chain loop in a first direction, the daisy-chain loop couples the host to the one more more clients, the first command requests all of the one or more clients to send resonses to the host
1304
At each client, transmit the first command to an adjacent client through the daisy-chain loop in the first direction and transmit a reponse signal to the host through the daisy-chain loop in a second direction, the second direction is opposite to the first direction
1306
Does the host receive reponse signals from all of the one or more clients?
YES
1308
STOP
NO
1308
Transmit a second command from the host to one or more clients through the daisy-chain loop in the second direction, the second command requests all of the one or more clients to send resonses to the host
1310
At each client, transmit the second command to an adjacent client through the daisy-chain loop in the second direction and transmit a reponse signal to the host through the daisy-chain loop in the first direction

FIG. 13

INTERNATIONAL SEARCH REPORT

International application No.
PCT/US 18/40140

A. CLASSIFICATION OF SUBJECT MATTER
IPC(8) - G01R 31/00, G01R 31/02, H02J 7/04 (2018.01)
CPC - G01R 31/006, G01R 31/025, H02J 7/0014, H02J 7/0021, Y02T 10/7055, B60L 3/0046, B60L 11/1853

According to International Patent Classification (IPC) or to both national classification and IPC

B. FIELDS SEARCHED

Minimum documentation searched (classification system followed by classification symbols)
See Search History Document

Documentation searched other than minimum documentation to the extent that such documents are included in the fields searched
See Search History Document

Electronic data base consulted during the international search (name of data base and, where practicable, search terms used)
See Search History Document

C. DOCUMENTS CONSIDERED TO BE RELEVANT

Category*	Citation of document, with indication, where appropriate, of the relevant passages	Relevant to claim No.
Y	US 2016/0025795 A1 (Tesla Motors, Inc.) 28 January 2016 (28.01.2016) entire document (especially para [0011], [0013], [0039], [0041]-[0042], [0045], [0048], [0058], [0072], [0080], [0081], [0094], [0139]).	1-21
Y	US 2010/0188972 A1 (Knapp) 29 July 2010 (29.07.2010) entire document (especially para [0139]).	1-11, 19-21
Y	US 2017/0177048 A1 (Tesla Motors, Inc.) 22 June 2017 (22.06.2017) entire document (especially para [0004], [0023], [0024], [0031]).	12-18
Y	US 5,687,014 A (Czerwiec et al.) 11 November 1997 (11.11.1997) entire document (especially Fig. 1, col. 3, lines 3-7, col. 3, lines 49-52, col. 7, lines 57-60, col. 13, lines 63-64).	8, 9
A	US 2005/0058390 A1 (Iwai) 17 March 2005 (17.03.2005) entire document.	1-21
A	US 2017/0010329 A1 (Panasonic Intellectual Property Management Co., Ltd.) 12 January 2017 (12.01.2017) entire document.	1-21

☐ Further documents are listed in the continuation of Box C. ☐ See patent family annex.

* Special categories of cited documents:
"A" document defining the general state of the art which is not considered to be of particular relevance
"E" earlier application or patent but published on or after the international filing date
"L" document which may throw doubts on priority claim(s) or which is cited to establish the publication date of another citation or other special reason (as specified)
"O" document referring to an oral disclosure, use, exhibition or other means
"P" document published prior to the international filing date but later than the priority date claimed
"T" later document published after the international filing date or priority date and not in conflict with the application but cited to understand the principle or theory underlying the invention
"X" document of particular relevance; the claimed invention cannot be considered novel or cannot be considered to involve an inventive step when the document is taken alone
"Y" document of particular relevance; the claimed invention cannot be considered to involve an inventive step when the document is combined with one or more other such documents, such combination being obvious to a person skilled in the art
"&" document member of the same patent family

Date of the actual completion of the international search	Date of mailing of the international search report
05 September 2018 (05.09.2018)	25 SEP 2018

Name and mailing address of the ISA/US	Authorized officer:
Mail Stop PCT, Attn: ISA/US, Commissioner for Patents P.O. Box 1450, Alexandria, Virginia 22313-1450 Facsimile No. 571-273-8300	Lee W. Young PCT Helpdesk: 571-272-4300 PCT OSP: 571-272-7774

Form PCT/ISA/210 (second sheet) (January 2015)