May 9, 1939. F. C. PETHICK 2,157,563

LAMP CHANGER

Filed Jan. 2, 1937

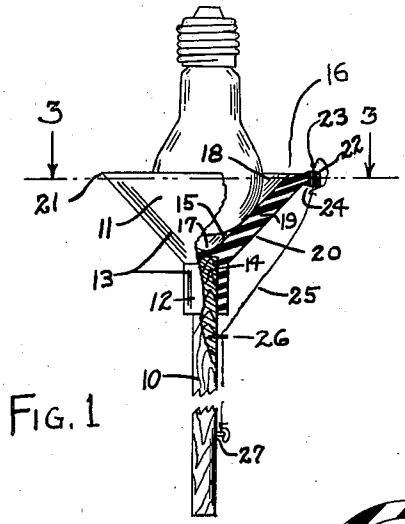

FIG. 1

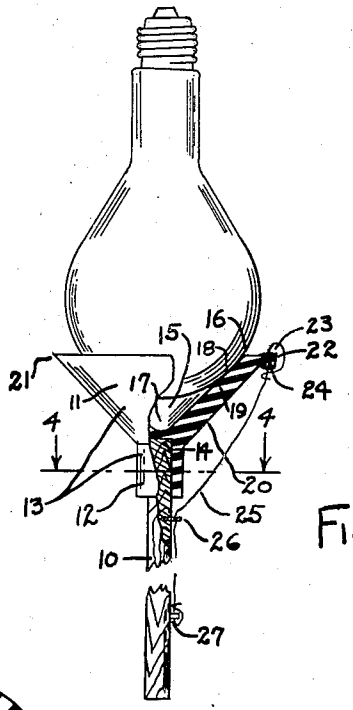

FIG. 2

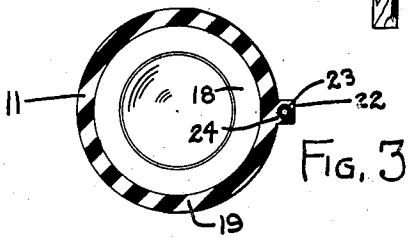

FIG. 3



FIG. 4

INVENTOR

Ford C. Pethick

Patented May 9, 1939 2,157,563

UNITED STATES PATENT OFFICE

2,157,563

LAMP CHANGER

Ford C. Pethick, Scranton, Pa.

Application January 2, 1937, Serial No. 118,792

6 Claims. (Cl. 294—20)

My invention relates to lamp changers, more particularly to lamp changers of the vacuum cup type, and the invention has for its object the provision of an improved and simplified device of this character.

Lamp changers generally comprise a pole, at the upper end of which is a device for gripping or otherwise taking hold of the lamp bulb which is to be removed or replaced. By using a lamp changer it is possible to remove or replace lamp bulbs located in elevated sockets without the use of a ladder or the like.

It is desirable in this type of apparatus that the device which grips or takes hold of the lamp be such that there will be no danger of breaking the glass globe of the lamp, but on the other hand it is also desirable that the gripping device provide sufficient holding power so that by using the lamp changer a burned-out lamp can be manipulated out of an elevated socket and a new lamp manipulated into the socket without any danger of the lamp's being dropped. It is also generally desirable to have some means of releasing the hold which the lamp changer has on the lamp after it has been manipulated into the socket. A further very desirable feature is to have the gripping device so arranged that it will perform the above functions equally well on all the common sized lamp bulbs. This has been practically impossible with lamp changers of the vacuum cup type heretofore generally used because lamp changers of this type have been arranged to grip only one size of lamp bulb. This has necessitated having a different size lamp changer or at least a different sized vacuum cup for each different size lamp bulb to be handled. Also lamp changers of the vacuum cup type, if they have provided sufficient holding power so that by their use the lamp could successfully be manipulated into and out of the socket, also have held the lamp with such a strong grip that without means for releasing this grip it has been difficult to separate the lamp changer from the lamp after the lamp has been manipulated into the socket. In fact if no releasing device is provided, it is possible to break the lamp bulb or the fixture by the pull exerted on the lamp changer to separate it from the lamp.

My invention contemplates the provision of an improved lamp changer with a single vacuum cup which will grip any of the various sized spherical lamp bulbs or lamp bulbs having a convex lower end on the bulb with sufficient holding power so that they can be manipulated into or out of an elevated socket without any danger of the lamp's being dropped or broken.

It is a further object of this invention to provide suitable means for releasing the lamp from the grip of the vacuum cup after it has been manipulated into the socket.

It is a still further object of this invention to provide an improved vacuum cup gripping device for lamp changers.

In accordance with this invention in one form thereof a suitable vacuum cup is arranged at the upper end of a pole, and a cord or wire is arranged to extend from the vacuum cup to a point at or near the lower end of the pole.

By the use of my invention any of the common sized spherical lamps or lamps having a convex end on the bulb can be removed from or placed into elevated sockets without any danger of breaking or dropping the lamp or without any undue strain being placed on either the bulb or the socket.

For a more complete understanding of this invention, reference should be had to the accompanying drawing in which:

Fig. 1 is an elevation of a lamp changer embodying this invention;

Fig. 2 is a duplicate of Fig. 1 except that it shows the lamp changer embodying this invention about to grip a larger sized lamp than is shown in Fig. 1;

Fig. 3 is a horizontal section view taken through the line 3—3 of Fig. 1 and looking in the direction of the arrows;

Fig. 4 is a horizontal section view taken through the line 4—4 of Fig. 2 and looking in the direction of the arrows;

In Figs. 1, 2, 3, and 4, parts are shown in section, and parts are broken away to illustrate certain details of the construction.

Referring to the drawing, this invention has been shown in one form in Figs. 1, 2, 3, and 4 as applied to a lamp changer of the vacuum cup type comprising a pole 10 to the upper end of the pole 10 is attached the vacuum cup 11.

The pole 10 has sufficient length so that a person standing on the floor and using the pole 10 can place the vacuum cup 11 against the spherical or convex portion of an electric lamp bulb installed in an elevated socket. Preferably the pole 10 is cylindrical in form. The pole 10 also has sufficient rigidity so that the movement of the vacuum cup 11 can easily be controlled by a person grasping the lower end of the pole 10. Preferably the pole 10 may be formed of wood but other materials are found satisfactory.

The vacuum cup 11 and the foundation 12 comprise the flexible head 13. Preferably the flexible head 13 is formed as one unit. As shown in Figs. 1 and 2 the external form of the flexible head 13 is preferably funnel shaped. The flexible head 13 may be of any suitable material, but preferably will be of a good grade of flexible rubber. The foundation 12 shows one way by which vacuum cup 11 is attached to the upper end of the pole 10. As shown in Fig. 4 the foundation 12 is preferably cylindrical in form and is preferably provided with a cylindrical hole 14. The lower end of the hole 14 is open. The upper end of the hole 14 is closed. The internal diameter of the hole 14 is preferably a little less than the external diameter of the upper end of the pole 10. In assembling the lamp changer, the upper end of the pole 10 is forced into the somewhat smaller hole 14. This causes the foundation 12 to grip firmly the upper end of the pole 10. To insure further the adhesion between the upper end of the pole 10 and the foundation 12 and to insure that the pole 10 can not be rotated independently of the vacuum cup 11, glue may be used to fasten the upper end of the pole 10 into the hole 14.

The vacuum cup 11 provides means for gripping by vacuum any size from the smallest to the largest of the common spherical lamp bulbs or lamp bulbs having a convex lower end. To accomplish this, a recess 15 is provided in the upper end of the vacuum cup 11. Preferably the recess 15 is in the form of a frustrum of a right circular cone but may be in any other suitable form such as a right circular central recess of steadily decreasing diameter. The vertex angle of the cone of which the recess 15 is a frustrum may within reasonable limits be almost any value desired, but it has been found preferable to provide a recess which is a frustrum of a right circular cone having a vertex angle of approximately ninety (90) degrees. As shown in Figs. 1 and 2 the frusto-conical recess 15 is located with the circular portion of largest diameter forming the open mouth or inner rim 16 of the recess 15, and with its circular portion of smallest diameter forming the lower closed bottom 17 of the recess 15. The bottom 17 of the recess 15 is preferably concave in form.

The inner surface 18 of the recess 15 is preferably smooth. The wall 19 between the inner surface 18 and the external surface 20 of the vacuum cup 11 is preferably of substantial thickness, because when the vacuum cup 11 is used to grip large sized lamp bulbs, the contact between the bulb and the inner surface 18 of the vacuum cup 11 is made at or near the inner rim 16 of the recess 15. The wall 19 therefore should have sufficient thickness and strength to be able to support the large sized lamp bulb in an approximately co-axial relationship with the pole 10.

Preferably at one point on the external surface 20 of the vacuum cup 11 near the outer rim 21 there is provided a means for attaching a cord preferably in the form of a lip 22. There is preferably a hole 23 through the lip 22. The lip 22 is preferably formed of the same material as the vacuum cup 11 and is preferably formed as one piece with the vacuum cup 11. The hole 23 through the lip 22 is preferably reinforced with a metallic eyelet 24. By means of the hole 23 and the lip 22 there is attached to the outer surface 20 of the vacuum cup 11 a cord 25 which preferably extends from the lip 22 to a point near the lower end of the pole 10. The cord 25 is preferably supported loosely along the pole 10 by being threaded through screw eyes 26. The cord 25 is preferably fastened to the pole 10 by a screw eye 27 at a point near the bottom of the pole 10.

In the operation of this apparatus, if it is desirable to remove a lamp bulb from an elevated socket, the lower end of the pole 10 is grasped in the hand and by means of the pole 10 the recess 15 in the vacuum cup 11 is pressed against the spherical or convex portion of the lamp bulb so that the bulb, the vacuum cup 11, and the pole 10 are all approximately in co-axial relationship one with the other, and so that the convex surface of the lamp bulb is approximately tangent to the inner surface 18 of the vacuum cup 11. In other words the lamp bulb is inscribed into the recess 15. By means of the pole 10 the vacuum cup 11 is pressed firmly against the lamp bulb in order to expel part of the air confined in the portion of the recess 15 below the convex surface of the lamp bulb. If the lamp bulb to be removed is small, the bulb makes contact with the inner surface 18 of the recess 15 fairly near the bottom 17 of the recess 15 as shown in Fig. 1. If the lamp bulb to be removed is large the bulb makes contact with the inner surface 18 of the recess 15 near the inner rim 16 as shown in Fig. 2. After part of the air has been expelled from the vacuum cup 11 and the vacuum cup 11 has firmly gripped the lamp bulb, the lower end of the pole 10 is rotated. This rotates the vacuum cup 11 which in turn rotates the lamp bulb and unscrews the lamp from the socket. After the lamp has been disengaged from the socket it can be lowered and detached from the grip of the vacuum cup 11.

If it is desirable to manipulate a lamp into an empty socket located in an elevated position, the convex surface of the lamp bulb is held against the inner surface 18 of the recess 15 so that the lamp bulb, the vacuum cup 11, and the pole 10 are all in approximately co-axial relationship one with the other. Then sufficient pressure is applied to the lamp bulb to force it against the vacuum cup 11 so as to expel part of the air confined in the portion of the recess 15 below the convex surface of the lamp bulb. After the vacuum cup 11 has firmly gripped the lamp bulb, the bulb is raised to the socket and is manipulated into the socket by rotating the pole 10 in order to screw the lamp into the socket.

After the lamp bulb has been manipulated into the elevated socket, the grip which the vacuum cup 11 has on the lamp bulb may be released by pulling the cord 25 which distorts the shape of the vacuum cup 11 sufficiently to separate a portion of the inner surface 18 of the vacuum cup 11 from contact with the spherical or convex portion of the lamp bulb. This releases the grip the vacuum cup 11 has upon the lamp bulb, and permits the removal of the lamp changer device.

Generally it has been found that the unmoistened vacuum cup 11 will grip the lamp bulb with sufficient power to allow it to be properly manipulated. However if increased gripping power is desired it may be obtained by moistening the inner surface 18 of the vacuum cup 11 with a little water or by breathing thereon.

It is evident from the above description of my invention that lamp changers manufactured in accordance therewith are inexpensive, simple to construct, easy to operate, and adapted to handle any size of the various spherical lamp bulbs or

any size lamp having a bulb with a lower convex end.

The expression "frustro-conical", "frustrum of a cone" and the like in the description and claims are intended to mean not only that which is left of a cone after cutting off an appreciable part of the point of the cone, but also is intended to include that which is left of a cone after an infinitesimally small part of the point has been cut off. In other words these expressions are intended to include what is generally considered a cone and a frustrum of a cone.

What I claim as new and desire to secure by Letters Patent of the United States, is,—

1. A lamp changer comprising a pole, a vacuum cup of flexible material mounted on the upper end of said pole, said vacuum cup having in its upper end a right circular central recess of steadily decreasing diameter, a smooth inner surface for said recess, and said inner surface acting as the contact making surface when said vacuum cup grips a lamp bulb.

2. A lamp changer comprising a flexible head having in its upper end a centrally located right circular frustro-conical gripping recess with a smooth inner surface which inner surface acts as the gripping element, said flexible head having in its lower end a centrally located right cylindrical recess, a cylindrical pole the upper end of which is firmly fastened into said cylindrical recess, a cord extending from the upper edge of the external surface of said flexible head to a point near the bottom of said pole, and a means for attaching said cord to the uppermost outer edge of said flexible head, whereby through the use thereof any sized lamp bulb can be removed from or manipulated into a socket located in an elevated position without the use of a ladder or the like.

3. A gripping device for lamp changers comprising a vacuum cup of flexible material having in its upper end a right circular central recess of steadily decreasing diameter, and a smooth inner surface for said recess, said inner surface acting as the contact making surface when said vacuum cup grips a lamp bulb.

4. A gripping device for lamp changers comprising a vacuum cup having in its upper end a frustro-conical gripping recess which is a frustrum of a cone having a vertex angle of approximately 90 degrees, means for attaching said vacuum cup to the upper end of a pole, and means for attaching a releasing device to said vacuum cup.

5. A lamp changer comprising a pole, a vacuum cup gripping device having in its upper end a frustro-conical gripping recess which is a frustrum of a cone having a vertex angle of approximately 90 degrees, means for attaching said vacuum cup to the upper end of said pole and means for releasing the grip of said vacuum cup.

6. A lamp changer comprising a pole, a vacuum cup gripping device having in its upper end a frustro-conical recess which is a frustrum of a cone having a vertex angle of approximately 90 degrees, said recess having a concave bottom, a smooth inner surface for said recess, said inner surface acting as the contact-making surface when said vacuum cup grips any sized lamp bulb, means for attaching said vacuum cup to the upper end of said pole, and means for releasing the grip of said vacuum cup.

FORD C. PETHICK.