US 20140313054A1

(19) **United States**

(12) **Patent Application Publication**

Biondi et al.

(10) **Pub. No.: US 2014/0313054 A1**

(43) **Pub. Date: Oct. 23, 2014**

(54) **NETWORK MONITORING SYSTEMS FOR MEDICAL DEVICES**

(71) Applicants: **James W. Biondi**, North Haven, CT (US); **Aaron Fand**, Cheshire, CT (US)

(72) Inventors: **James W. Biondi**, North Haven, CT (US); **Aaron Fand**, Cheshire, CT (US)

(21) Appl. No.: **14/196,587**

(22) Filed: **Mar. 4, 2014**

Related U.S. Application Data

(63) Continuation of application No. 13/401,093, filed on Feb. 21, 2012, now abandoned, which is a continuation of application No. 10/984,186, filed on Nov. 8, 2004, which is a continuation of application No. 09/791,334, filed on Feb. 23, 2001, now Pat. No. 6,839,753.

Publication Classification

(51) **Int. Cl.**

A61M 16/00	(2006.01)
A61B 5/00	(2006.01)
G08B 23/00	(2006.01)

(52) **U.S. Cl.**

CPC ***A61M 16/0051*** (2013.01); ***G08B 23/00*** (2013.01); ***A61B 5/002*** (2013.01); *A61M 2230/435* (2013.01)

USPC **340/870.09**

(57) **ABSTRACT**

A ventilator monitoring system is described for monitoring a plurality of ventilators. In one embodiment, a server including a dedicated ventilator application program tor each type of ventilator, monitors a plurality of heterogeneous ventilators over a wireless network.

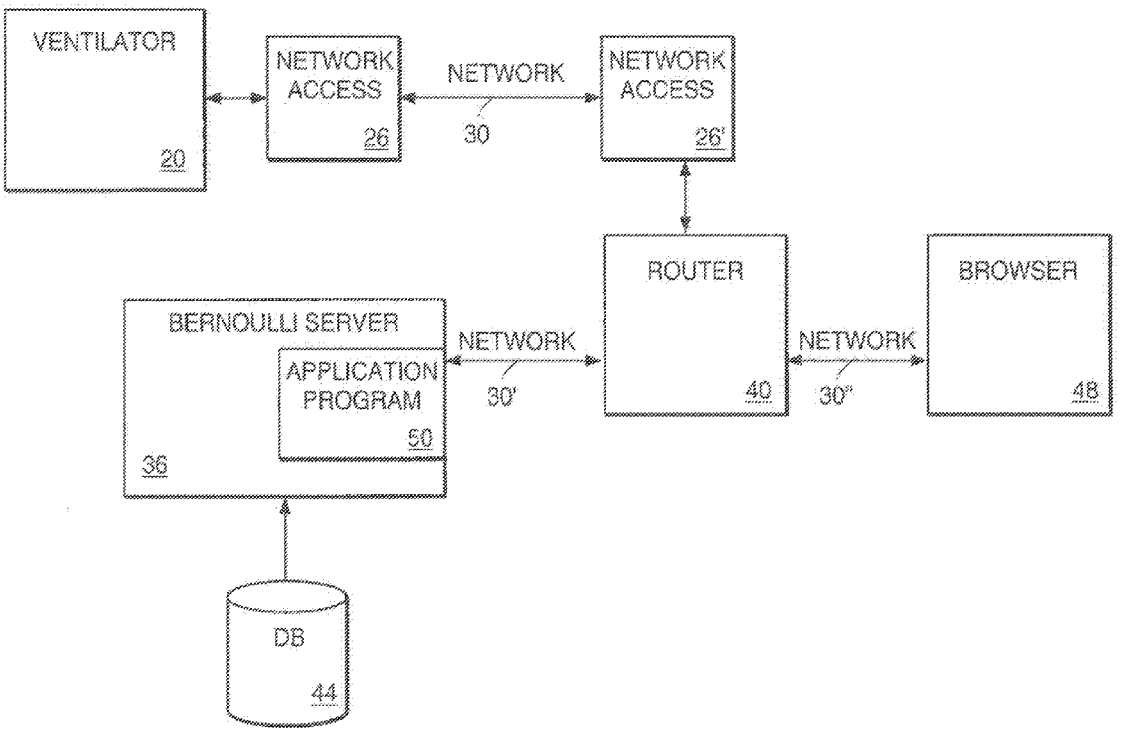

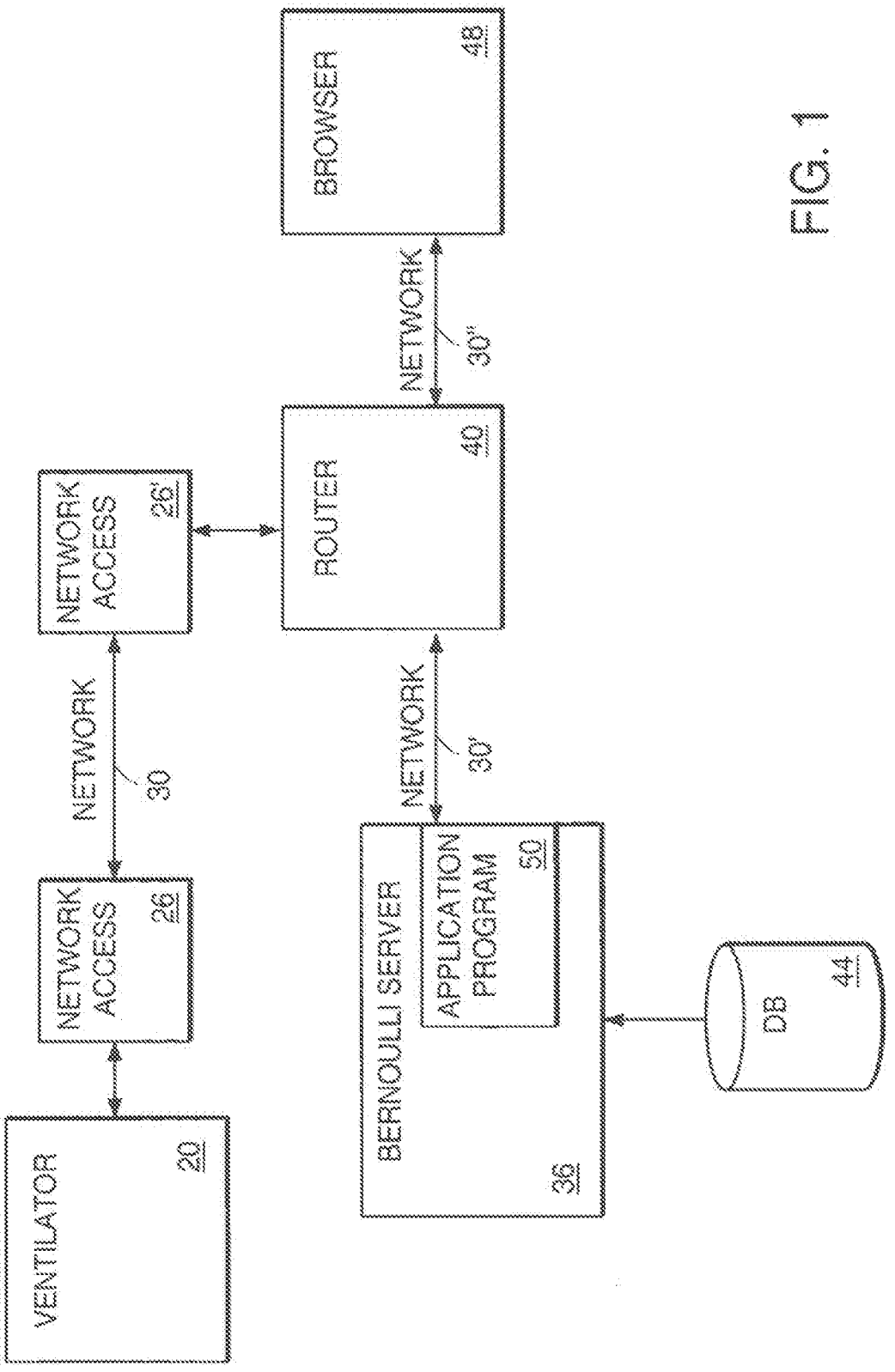
VENTILATOR
20
NETWORK ACCESS
26
NETWORK
30
NETWORK ACCESS
26'
ROUTER
40
NETWORK
30'
BROWSER
48
NETWORK
30''
BERNOULLI SERVER
APPLICATION PROGRAM
50
36
DB
44

FIG. 1

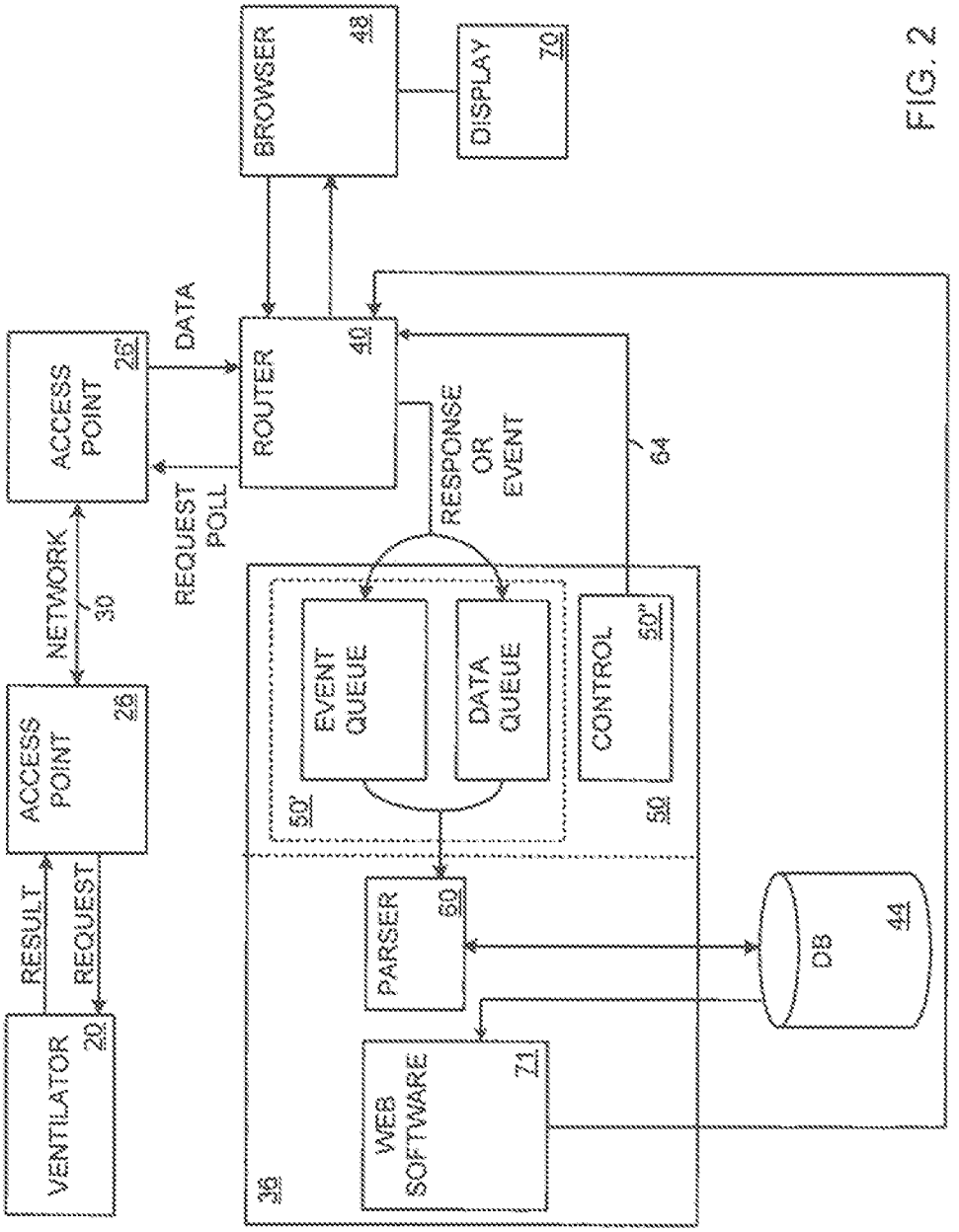
BROWSER
48
DISPLAY
70
ACCESS POINT
28'
DATA
ROUTER
40
REQUEST POLL
RESPONSE OR EVENT
64
NETWORK
30
EVENT QUEUE
DATA QUEUE
CONTROL
50'
50
ACCESS POINT
26
RESULT
REQUEST
PARSER
60
DB
44
VENTILATOR
20
WEB SOFTWARE
71
36

FIG. 2

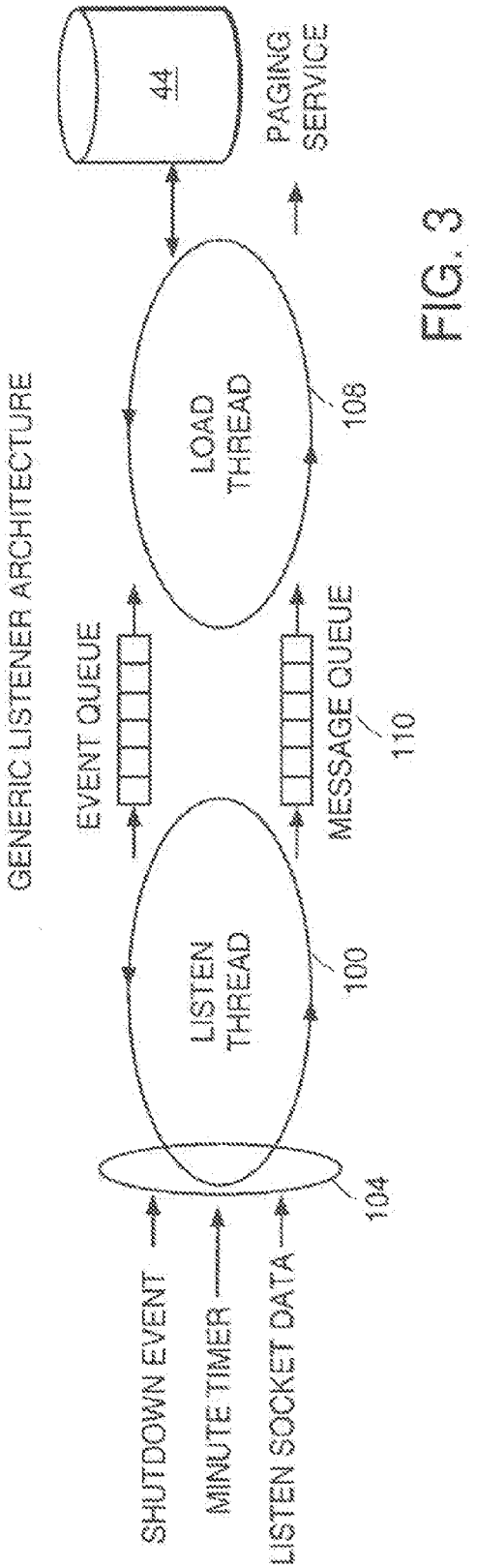
GENERIC LISTENER ARCHITECTURE
SHUTDOWN EVENT
MINUTE TIMER
LISTEN SOCKET DATA
LISTEN THREAD
100
104
EVENT QUEUE
MESSAGE QUEUE
110
LOAD THREAD
108
44
PAGING SERVICE

FIG. 3

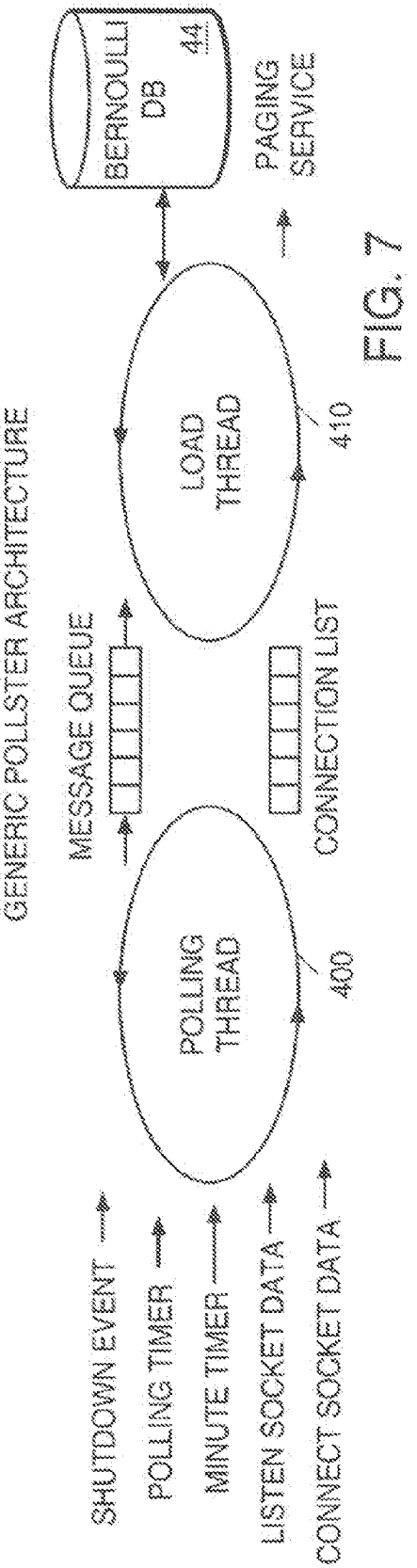
GENERIC POLLSTER ARCHITECTURE
SHUTDOWN EVENT
POLLING TIMER
MINUTE TIMER
LISTEN SOCKET DATA
CONNECT SOCKET DATA
POLLING THREAD
400
MESSAGE QUEUE
CONNECTION LIST
LOAD THREAD
410
BERNOULLI DB
44
PAGING SERVICE

FIG. 7

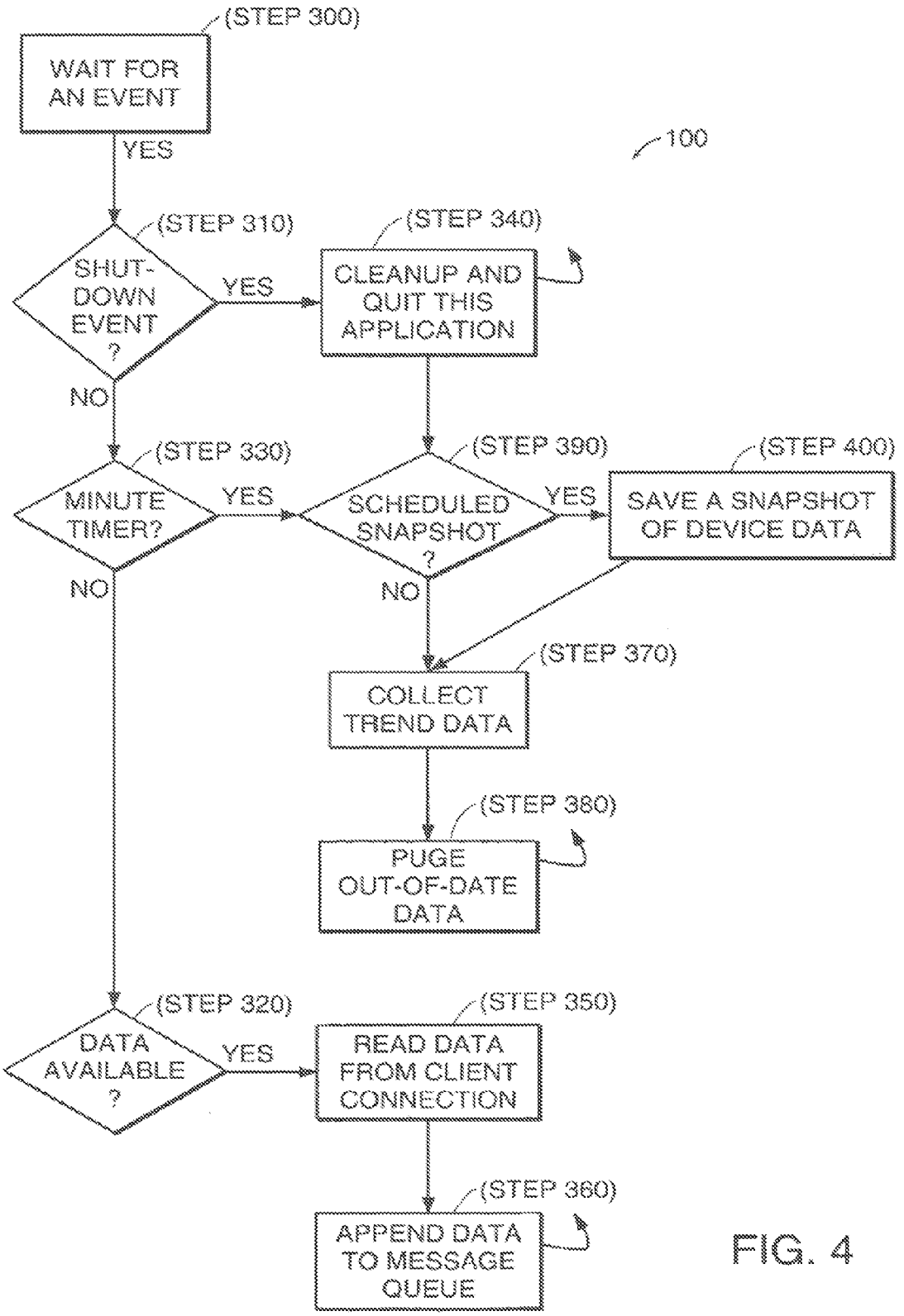
(STEP 300)
WAIT FOR AN EVENT
YES
100
(STEP 310)
SHUT-DOWN EVENT ?
YES
(STEP 340)
CLEANUP AND QUIT THIS APPLICATION
NO
(STEP 330)
MINUTE TIMER?
YES
(STEP 390)
SCHEDULED SNAPSHOT ?
YES
(STEP 400)
SAVE A SNAPSHOT OF DEVICE DATA
NO
NO
(STEP 370)
COLLECT TREND DATA
(STEP 380)
PUGE OUT-OF-DATE DATA
(STEP 320)
DATA AVAILABLE ?
YES
(STEP 350)
READ DATA FROM CLIENT CONNECTION
(STEP 360)
APPEND DATA TO MESSAGE QUEUE

FIG. 4

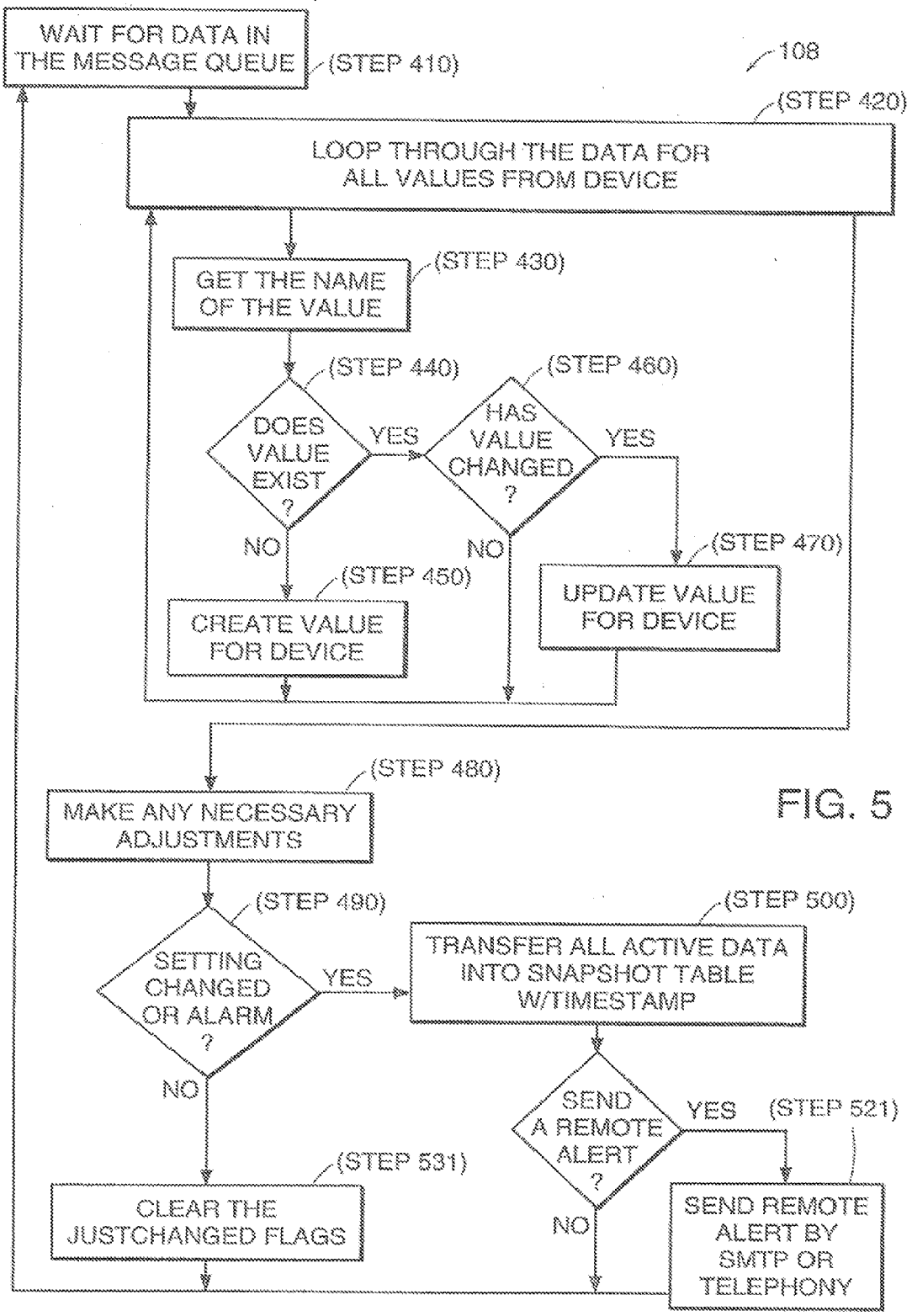
WAIT FOR DATA IN THE MESSAGE QUEUE
(STEP 410)
108
(STEP 420)
LOOP THROUGH THE DATA FOR ALL VALUES FROM DEVICE
GET THE NAME OF THE VALUE
(STEP 430)
(STEP 440)
DOES VALUE EXIST ?
YES
(STEP 460)
HAS VALUE CHANGED ?
YES
NO
NO
(STEP 450)
CREATE VALUE FOR DEVICE
(STEP 470)
UPDATE VALUE FOR DEVICE
(STEP 480)
MAKE ANY NECESSARY ADJUSTMENTS
(STEP 490)
SETTING CHANGED OR ALARM ?
YES
(STEP 500)
TRANSFER ALL ACTIVE DATA INTO SNAPSHOT TABLE W/TIMESTAMP
NO
SEND A REMOTE ALERT ?
YES
(STEP 521)
(STEP 531)
CLEAR THE JUSTCHANGED FLAGS
NO
SEND REMOTE ALERT BY SMTP OR TELEPHONY

FIG. 5

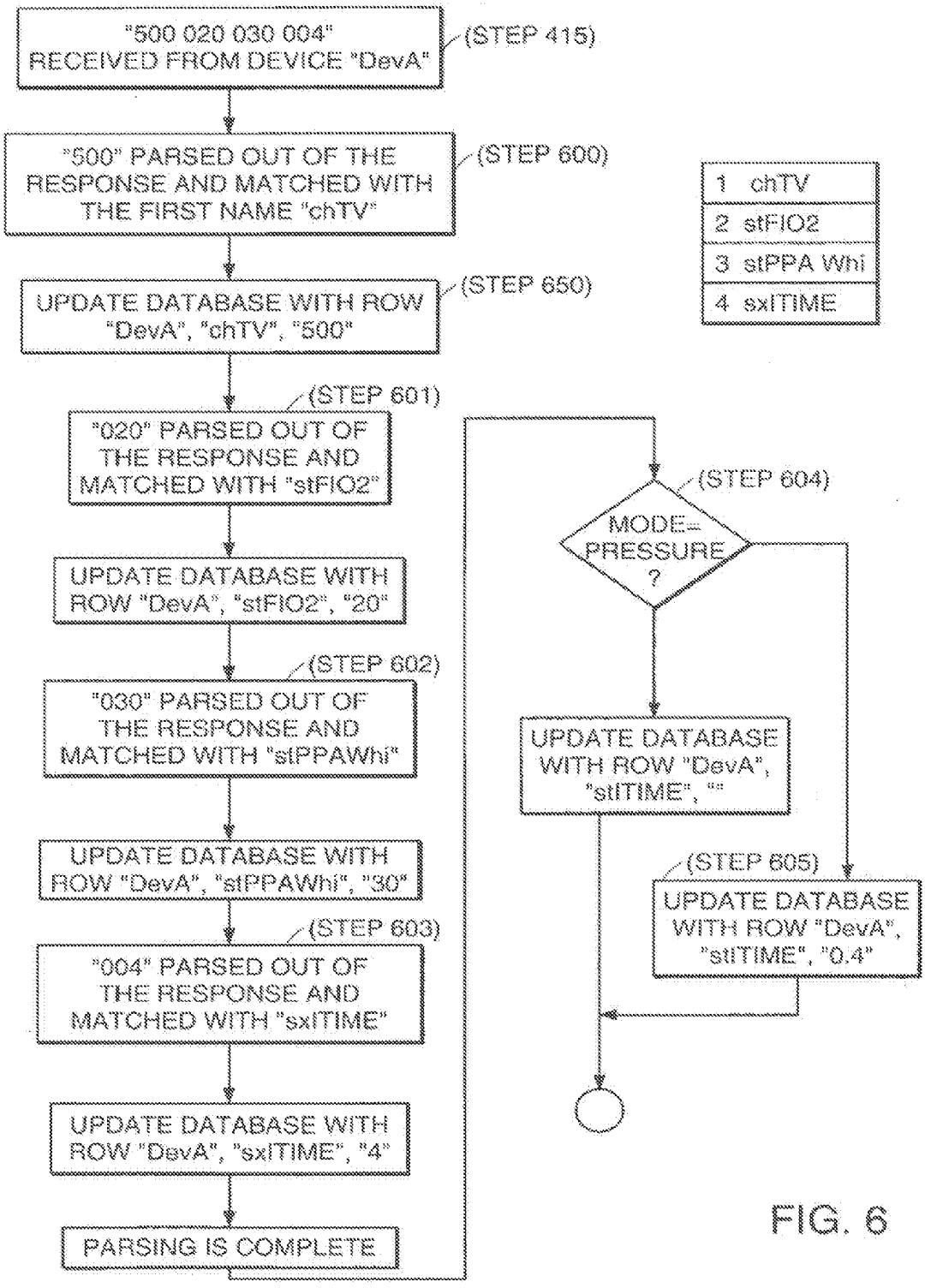
"500 020 030 004" RECEIVED FROM DEVICE "DevA"
(STEP 415)
"500" PARSED OUT OF THE RESPONSE AND MATCHED WITH THE FIRST NAME "chTV"
(STEP 600)
UPDATE DATABASE WITH ROW "DevA", "chTV", "500"
(STEP 650)
(STEP 601)
"020" PARSED OUT OF THE RESPONSE AND MATCHED WITH "stFIO2"
UPDATE DATABASE WITH ROW "DevA", "stFIO2", "20"
(STEP 602)
"030" PARSED OUT OF THE RESPONSE AND MATCHED WITH "stPPAWhi"
UPDATE DATABASE WITH ROW "DevA", "stPPAWhi", "30"
(STEP 603)
"004" PARSED OUT OF THE RESPONSE AND MATCHED WITH "sxITIME"
UPDATE DATABASE WITH ROW "DevA", "sxITIME", "4"
PARSING IS COMPLETE
1 chTV
2 stFIO2
3 stPPA Whi
4 sxITIME
(STEP 604)
MODE= PRESSURE ?
UPDATE DATABASE WITH ROW "DevA", "stITIME", ""
(STEP 605)
UPDATE DATABASE WITH ROW "DevA", "stITIME", "0.4"

FIG. 6

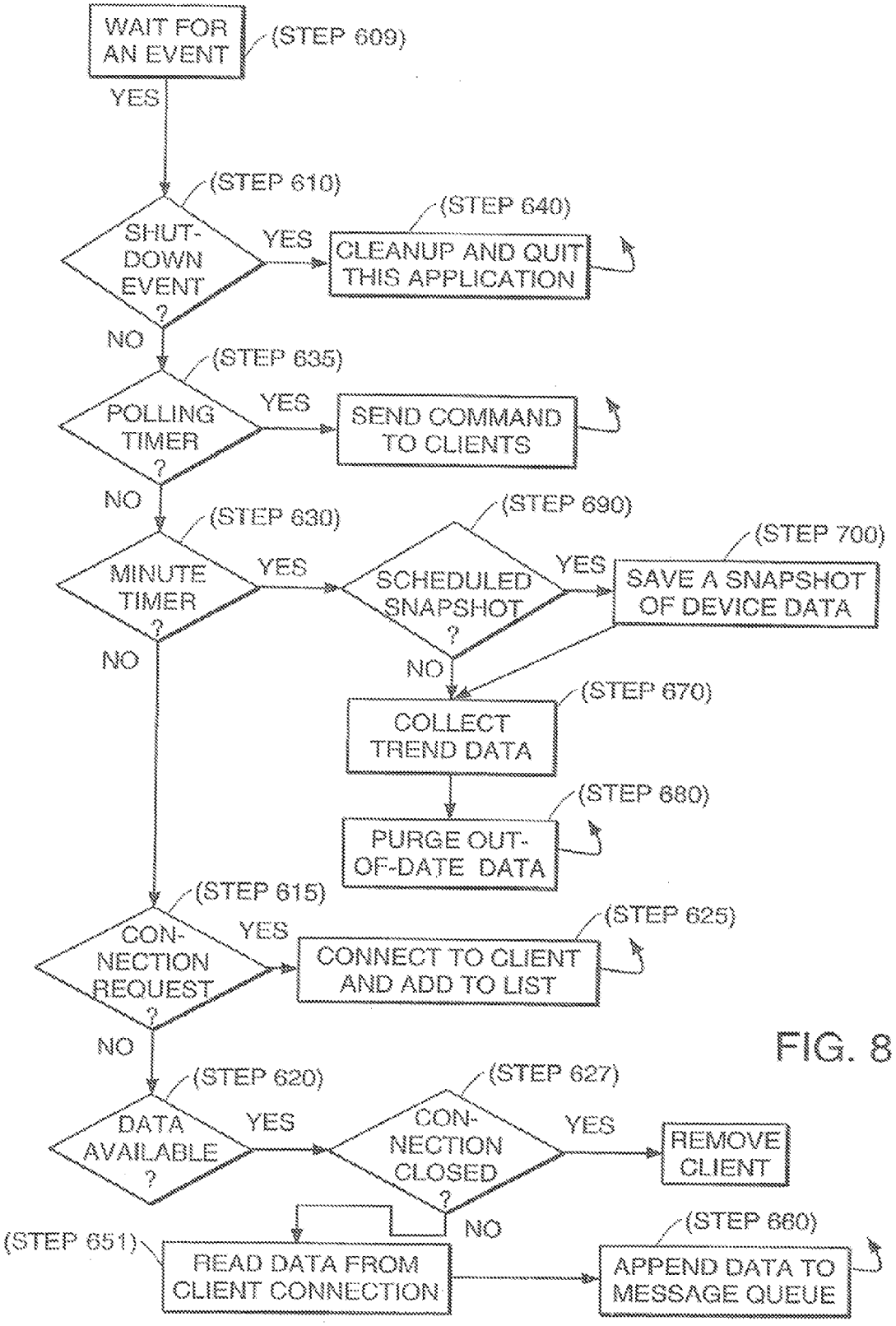
WAIT FOR AN EVENT
(STEP 609)
YES
(STEP 610)
SHUT-DOWN EVENT ?
YES
(STEP 640)
CLEANUP AND QUIT THIS APPLICATION
NO
(STEP 635)
POLLING TIMER ?
YES
SEND COMMAND TO CLIENTS
NO
(STEP 630)
MINUTE TIMER ?
YES
(STEP 690)
SCHEDULED SNAPSHOT ?
YES
(STEP 700)
SAVE A SNAPSHOT OF DEVICE DATA
NO
NO
(STEP 670)
COLLECT TREND DATA
(STEP 680)
PURGE OUT-OF-DATE DATA
(STEP 615)
CON-NECTION REQUEST ?
YES
(STEP 625)
CONNECT TO CLIENT AND ADD TO LIST
NO
(STEP 620)
DATA AVAILABLE ?
YES
(STEP 627)
CON-NECTION CLOSED ?
YES
REMOVE CLIENT
NO
(STEP 651)
READ DATA FROM CLIENT CONNECTION
(STEP 660)
APPEND DATA TO MESSAGE QUEUE

FIG. 8

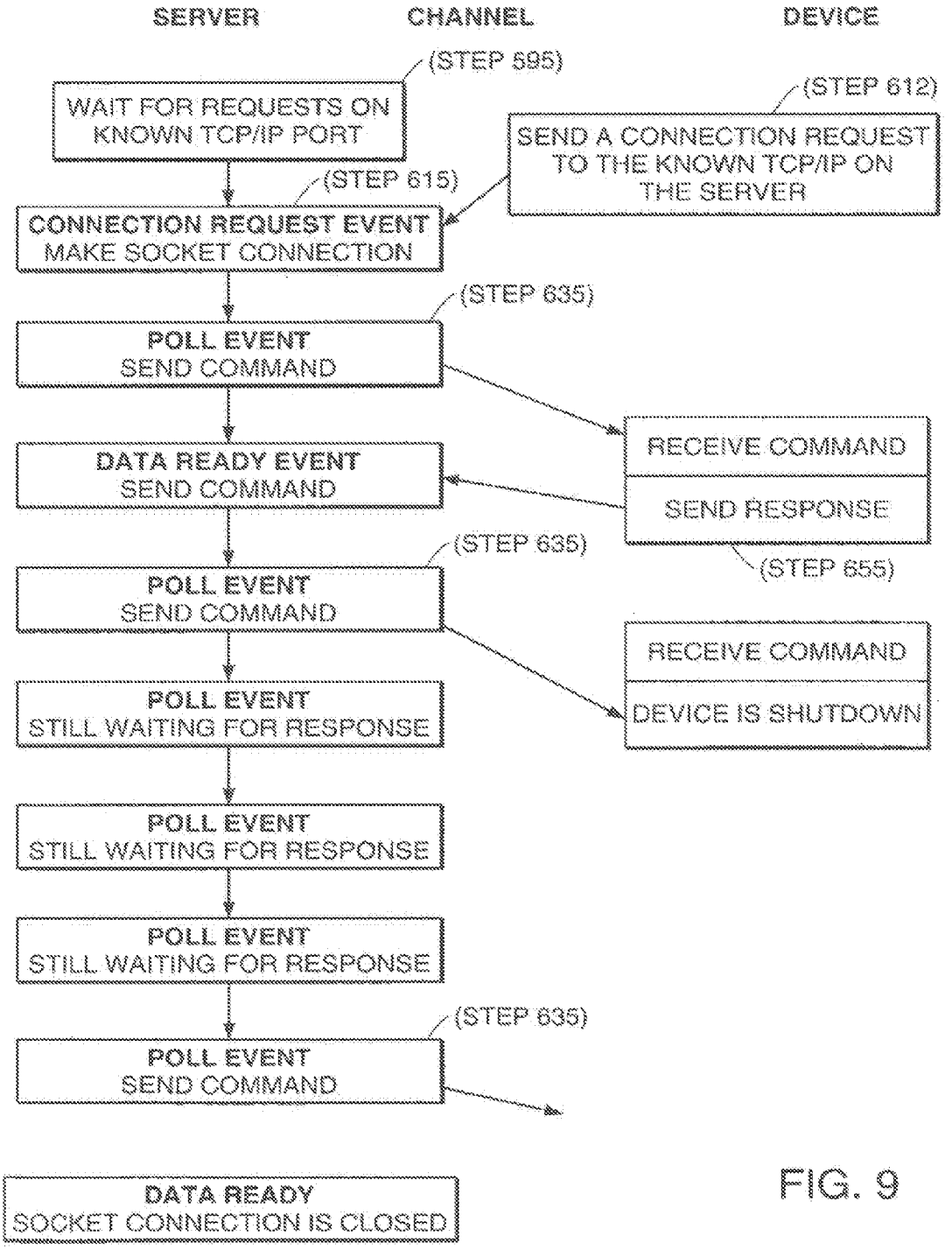
SERVER
CHANNEL
DEVICE
(STEP 595)
WAIT FOR REQUESTS ON KNOWN TCP/IP PORT
(STEP 612)
SEND A CONNECTION REQUEST TO THE KNOWN TCP/IP ON THE SERVER
(STEP 615)
CONNECTION REQUEST EVENT
MAKE SOCKET CONNECTION
(STEP 635)
POLL EVENT
SEND COMMAND
RECEIVE COMMAND
DATA READY EVENT
SEND COMMAND
SEND RESPONSE
(STEP 655)
(STEP 635)
POLL EVENT
SEND COMMAND
RECEIVE COMMAND
DEVICE IS SHUTDOWN
POLL EVENT
STILL WAITING FOR RESPONSE
POLL EVENT
STILL WAITING FOR RESPONSE
POLL EVENT
STILL WAITING FOR RESPONSE
(STEP 635)
POLL EVENT
SEND COMMAND
DATA READY
SOCKET CONNECTION IS CLOSED

FIG. 9

500 - DEVICE DATA TABLE - DATA INCLUDES JUST_CHANGED_FLAG 509
- 502 - LATEST DEVICE DATA TABLE
- 504 - DEVICE SNAPSHOT DATA TABLE
- 506 - TRENDING DATA TABLE
- 508 - SETTING AND ALARM CHANGE DATA TABLE

510 - DEVICE CONFIGURATION TABLE - INSTITUTION INFORMATION
- 512 - HISTORY TABLE

520 - CUSTOMIZATION TABLE - CONTROL OF DISPLAY INFORMATION
- 522 - GROUP
- 524 - SUBGROUP
- 526 - DEVICE TYPE

530 - DEVICE SPECIFIC TABLE
- 532 - VALUED TO BE TRENDED TABLE
- 534 - DESCRIPTION OF ALARM TABLE

FIG. 10

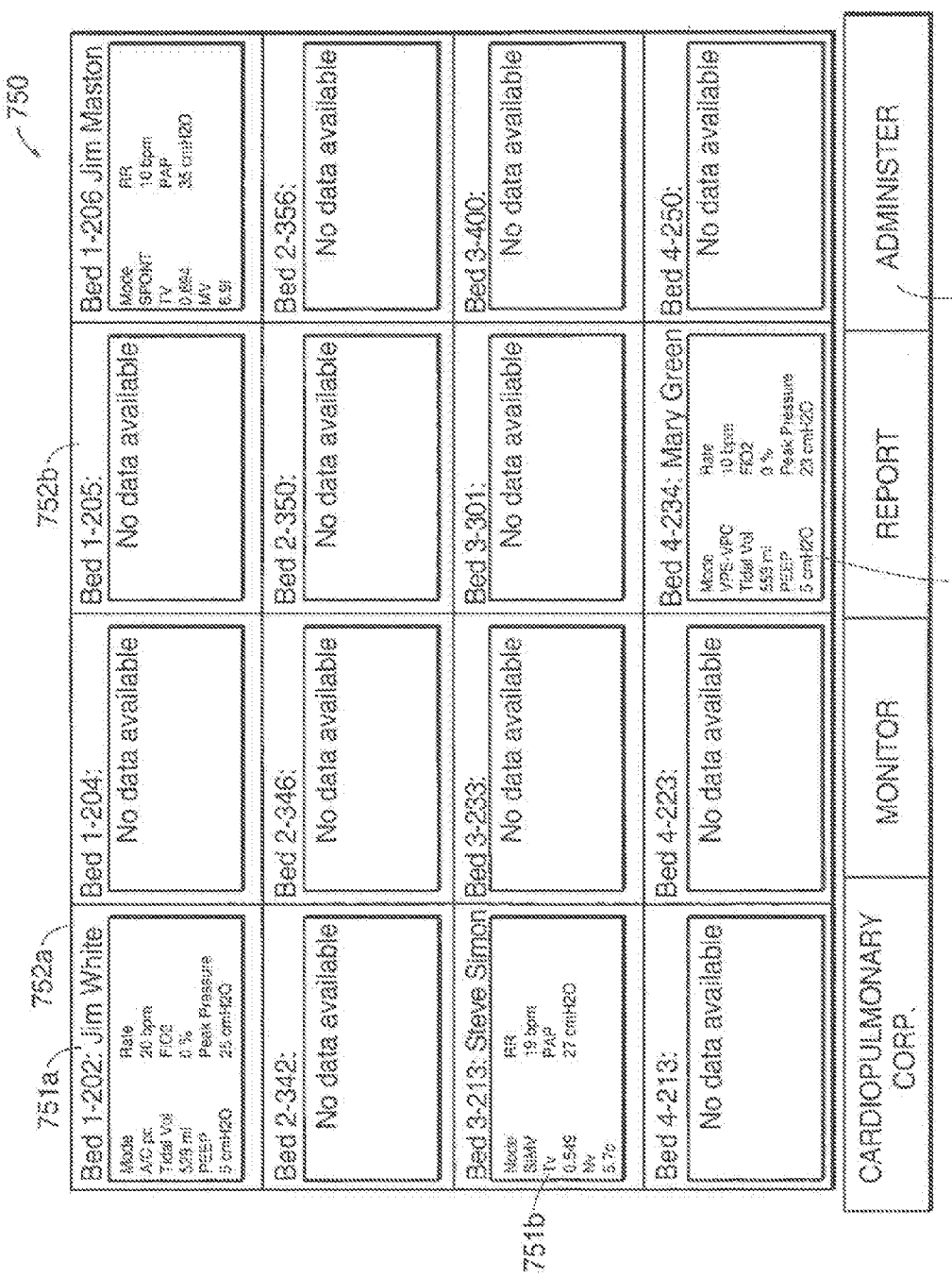
750
751a
752a
751b
752b
751n
752n
Bed 1-202: Jim White
Mode
A/C pc
Tidal Vol
528 ml
PEEP
5 cmH2O
Rate
20 bpm
FIO2
0 %
Peak Pressure
25 cmH2O
Bed 1-204:
No data available
Bed 1-205:
No data available
Bed 1-206 Jim Maston
Mode
SPONT
TV
0.884
MV
6.9l
RR
10 bpm
PAP
35 cmH2O
Bed 2-342:
No data available
Bed 2-346:
No data available
Bed 2-350:
No data available
Bed 2-356:
No data available
Bed 3-213: Steve Simon
Mode
SIMV
Tv
0.549
Mv
5.7c
RR
19 bpm
PAP
27 cmH2O
Bed 3-233:
No data available
Bed 3-301:
No data available
Bed 3-400:
No data available
Bed 4-213:
No data available
Bed 4-223:
No data available
Bed 4-234: Mary Green
Mode
VPS-VPC
Tidal Vol
559 ml
PEEP
5 cmH2O
Rate
10 bpm
FIO2
0 %
Peak Pressure
23 cmH2O
Bed 4-250:
No data available
CARDIOPULMONARY CORP.
MONITOR
REPORT
ADMINISTER

FIG. 11

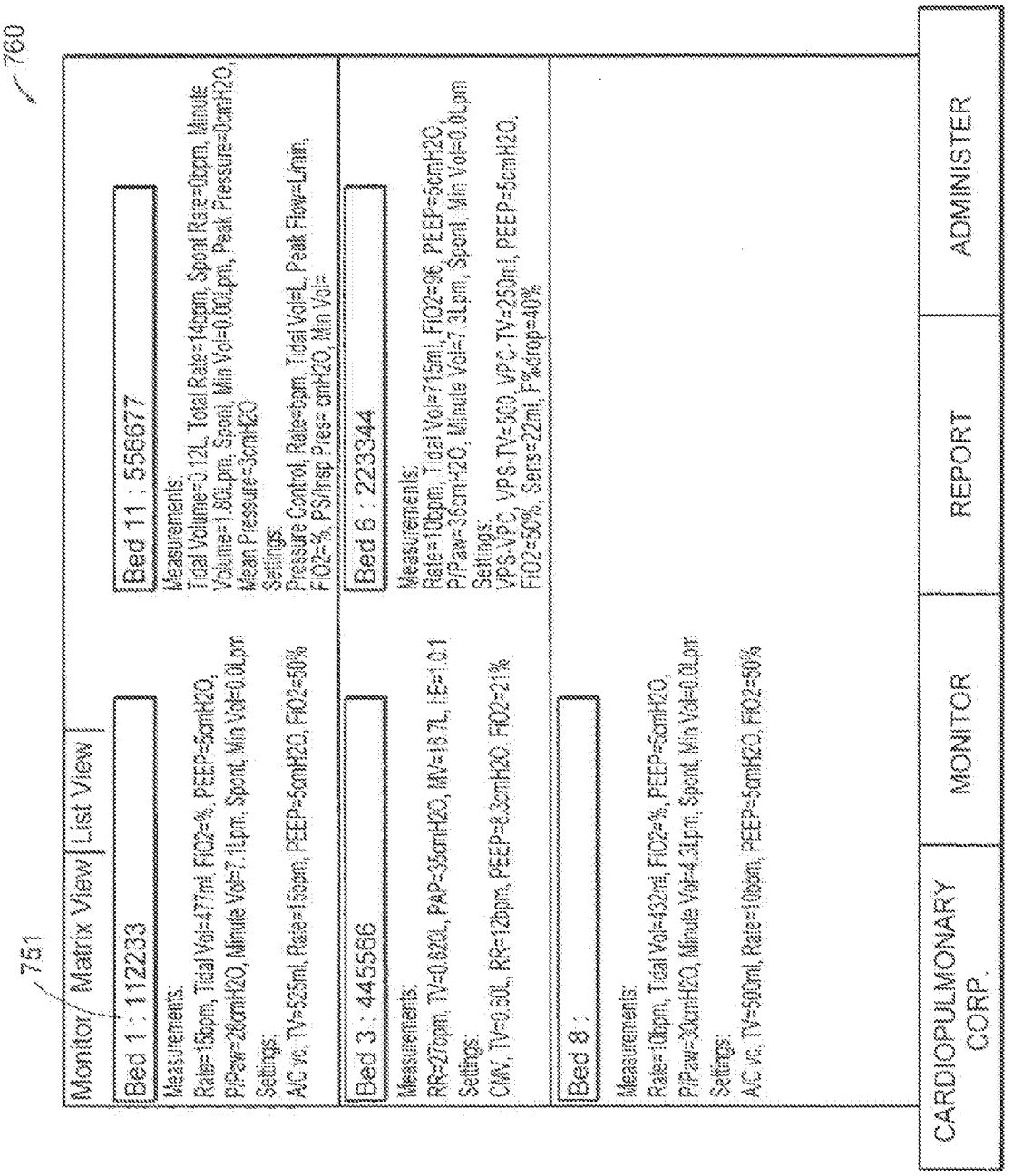
760
751
Monitor
Matrix View
List View
Bed 1 : 112233
Measurements:
Rate=15bpm, Tidal Vol=477ml, FiO2=%, PEEP=5cmH2O,
P/Paw=28cmH2O, Minute Vol=7.11pm, Spont, Min Vol=0.0Lpm
Settings:
A/C vc, TV=525ml, Rate=15bpm, PEEP=5cmH2O, FiO2=50%
Bed 11 : 556677
Measurements:
Tidal Volume=0.12L, Total Rate=14bpm, Spont Rate=0bpm, Minute
Volume=1.68Lpm, Spont, Min Vol=0.00Lpm, Peak Pressure=0cmH2O,
Mean Pressure=3cmH2O
Settings:
Pressure Control, Rate=5pm, Tidal Vol=L, Peak Flow=Lmin,
FiO2=%, PSInsp Pres= cmH2O, Min Vol=
Bed 3 : 445566
Measurements:
RR=27bpm, TV=0.62L, PAP=35cmH2O, MV=16.7L, I:E=1.0:1
Settings:
CMV, TV=0.60L, RR=12bpm, PEEP=8.3cmH2O, FiO2=21%
Bed 6 : 223344
Measurements:
Rate=10bpm, Tidal Vol=715ml, FiO2=96, PEEP=5cmH2O,
P/Paw=35cmH2O, Minute Vol=7.31pm, Spont, Min Vol=0.0Lpm
Settings:
VPS-VPC, VPS-TV=500, VPC-TV=250ml, PEEP=5cmH2O,
FiO2=50%, Sens=22ml, P%drop=40%
Bed 8 :
Measurements:
Rate=10bpm, Tidal Vol=432ml, FiO2=%, PEEP=5cmH2O,
P/Paw=30cmH2O, Minute Vol=4.3Lpm, Spont, Min Vol=0.0Lpm
Settings:
A/C vc, TV=500ml, Rate=10bpm, PEEP=5cmH2O, FiO2=50%
CARDIOPULMONARY CORP.
MONITOR
REPORT
ADMINISTER

FIG. 12

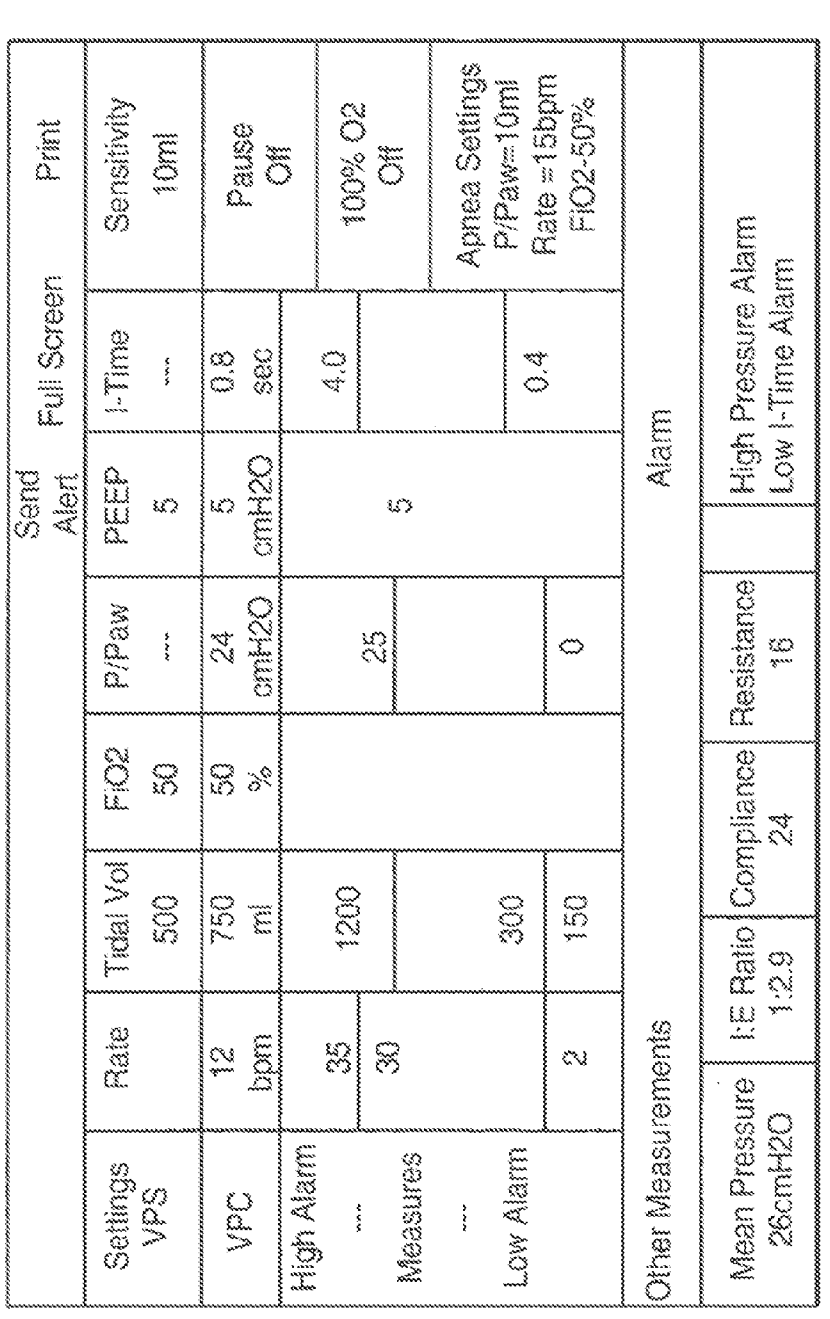
770
Send Alert
Full Screen
Print
Settings VPS
Rate
Tidal Vol 500
FiO2 50
P/Paw ---
PEEP 5
I-Time ---
Sensitivity 10ml
VPC
12 bpm
750 ml
50 %
24 cmH2O
5 cmH2O
0.8 sec
Pause Off
High Alarm
35
1200
25
4.0
100% O2 Off
Measures
30
5
Apnea Settings P/Paw=10ml Rate =15bpm FiO2-50%
Low Alarm
300
0.4
2
150
0
Other Measurements
Alarm
Mean Pressure 26cmH2O
I:E Ratio 1:2.9
Compliance 24
Resistance 16
High Pressure Alarm
Low I-Time Alarm

FIG. 13

NETWORK MONITORING SYSTEMS FOR MEDICAL DEVICES

REFERENCE TO RELATED APPLICATIONS

[0001] This application is a continuation of U.S. patent application Ser. No. 10/984,186, filed on Nov. 8, 2004, which is a continuation of U.S. patent application Ser. No. 09/791,334, filed on Feb. 23, 2001, now U.S. Pat. No. 6,839,753, the entire disclosures of each of which are hereby incorporated by reference herein.

[0002] This invention related in general to network monitoring systems for medical, devices, more particularly, to network monitoring systems that collect data from heterogeneous devices for display at a central monitoring station.

BACKGROUND

[0003] Remote medical monitoring systems provide the advantage of monitoring a plurality of medical devices connected to one or more patients from a single site. In a health care facility, a single monitoring system station permits simultaneous monitoring and interaction with remote medical devices located, for example, in a patient's hospital room. Network monitoring systems provide uniform and continuous patient monitoring while reducing the number of trained health care personnel needed to monitor and interact with each medical device.

[0004] Remote monitoring systems having numerous disadvantages are currently used in health care facilities. These prior art systems typically require manual entry of data into a patient's record. Waveform data or similar data is typically generated from the network system as a hard copy and manually entered by cutting and pasting into the patient's medical record. Manual entry of data into a patient's medical record is likely to introduce transcription errors in the patient's medical record.

[0005] Some prior art monitoring systems are capable of monitoring devices of the same make and model manufactured by the same company. Typically, health care institutions purchase medical devices, such as ventilators, from a number of different manufacturers. As currently known in the field of respiratory ventilators, in order to monitor a ventilator from a remote location, a remote monitoring system is required for each ventilator make and model. Consequently, a monitoring station and additional personnel are required to monitor each ventilator type. As a result, efficiency, which would otherwise be introduced by having a network monitoring system that monitors heterogeneous ventilators, is diminished.

SUMMARY OF THE INVENTION

[0006] The network monitoring system for medical devices according to the invention monitors and collects data, such as medical device settings, measured patient values, alarm conditions, and other data, from heterogeneous devices and displays the data at a central monitoring station. The display of collected, data uses web technology so that the data can be displayed on any client computer connectable to an institution's intranet. In a further embodiment of the invention, trending data of various patient parameters is gathered so that users can view the patient's recent history. A log is kept of the important events that occurred on the medical device and of important patient parameters to provide diagnostic information to caregivers such as nurses, technicians, and physicians.

[0007] In one embodiment of the invention, each medical device has its own data acquisition service application on a server that either listens for unsolicited data or actively polls data from the medical device. These applications are optimized to collect data and load it into the database quickly. In one embodiment of the invention, the medical device is a ventilator.

[0008] The database, in one embodiment, is Open Database Connectivity (ODBC) compliant so that the database is accessible to the server side web pages. The server side web page provides tables that store device data, configuration data, customization data and device-specific data. Queries made to the database in one embodiment are stored to speed up complicated query functions such as table joining.

[0009] In one embodiment of the invention, the data obtained by the data acquisition service application on the server is displayed, by a web browser or a client connected or connectable to a hospital intranet. Web pages are generated by executing code on the server using data stored in the database and outputting standard HTML.

BRIEF DESCRIPTION OF THE DRAWINGS

[0010] FIG. **1** is a block diagram of an embodiment of the invention.

[0011] FIG. **2** is a more detailed block diagram of the embodiment of the invention shown in

[0012] FIG. **3** is a diagram of a listener application according to one embodiment of the invention.

[0013] FIG. **4** is a flow chart of one embodiment of the operation of the listener application of FIG. **3** according to the invention.

[0014] FIG. **5** is a flow chart of one embodiment of the operation of the load thread application of FIG. **3** according to the invention.

[0015] FIG. **6** is a flow chart of the operation of an embodiment of a parser according to one embodiment of the invention.

[0016] FIG. **7** is a diagram of a pollster application according to one embodiment of the invention,

[0017] FIG. **8** is a flow chart of the operation of one embodiment of the pollster application of FIG. **7** according to one embodiment of the invention.

[0018] FIG. **9** is a flow chart of one embodiment of a connection request event according to the invention.

[0019] FIG. **10** illustrates embodiments of data tables according to the invention.

[0020] FIG. **11** illustrates a Matrix View screen display according to one embodiment of the invention.

[0021] FIG. **12** illustrates a List View screen display according to one embodiment of the invention.

[0022] FIG. **13** illustrates a Detail View screen display according to one embodiment of the invention.

DETAILED DESCRIPTION OF THE INVENTION

[0023] In brief overview and referring to FIG. **1**, a system constructed in accordance with the invention includes a medical device **20** such as a ventilator, connected to a network access device **26** such as a wireless transceiver. The network access device **26** communicates with a network **30** such as an 802.11 wireless Ethernet® local area network A server **36**, such as the Bernoulli server manufactured by the Cardiopulmonary Corporation Milford, Conn., executing an application program **50** is also in communication with the network **30**

through a network access point **26'** through, a router **40** by way of the same network **30** or a different network **30'**. The server **36** communicates with a database **44** and a user accesses information on the server **36** using a browser **48** on a client computer through a network link **30"** which may or may not be the same as the aforementioned networks **30**, **30'**.

[0024] In operation, the Bernoulli server **36** requests information from the medical ventilator **20** generally through the router **40**. Data obtained from the medical ventilator **20** is stored in the database **44**. When a user wishes to access ventilator data from the medical ventilator **20**, the user uses a browser **48** to read the ventilator files stored in the database **44**.

[0025] In more detail and referring also to FIG. **2**, in one embodiment the medical ventilator **20** is connected, via an RS232 serial port, to a network access point **26**. The network access point **26** converts the serial RS232 data available from the medical device **20** to a TCP/IP protocol compatible formal for transmission over the network **30**. In one embodiment, the network access device **26** converts the serial data to Ethernet® data and sends the Ethernet® data to an Ethernet® hub for transmission to the server **36**.

[0026] In another embodiment of the invention, the network access device **26** is a wireless Ethernet® transceiver which not only converts the serial RS232 data to the correct protocol, for a wireless Ethernet® network but also converts the data to radio frequency data which is then broadcast generally over a limited area. The radio frequency data is received by a wireless network access point **26'** which converts the radio frequency data back to TCP/IP data on a network connection and sends the data to the appropriate data acquisition application **30** on the server **36**. Conversely, the network access point **26'** also converts data from the server **36** to a wireless TCP/IP protocol which is transmitted via the wireless network **30** and received by the network access device **26**. The network access device **26** then converts the received radio frequency information to serial RS232 data tor use by the medical ventilator **20**.

[0027] According to the invention, a dedicated data acquisition application **50** on the server **36** is used for each medical ventilator type **20**. That is, generally each brand of ventilator will have its own protocol and will have a separate application program **50**. Each data acquisition application **50** is in part a listener program **50'** specifically programmed to communicate with the medical ventilator type **20**. Data acquisition applications **50** that send commands to prompt for data include what are referred to as pollsters **50"**. Since the listener application **50'** and the pollster application **50"** typically are running, in one embodiment they are written as a service application.

[0028] In one embodiment, according to the invention, referring to FIG. **3**, a listener application **50'** listens for data at a known User datagram protocol/Internet protocol (UDP/IP) port. The UDP protocol allows the data to go in one direction from, the medical device **20** to the server **36** without the need for an established socket connection. In another embodiment, the time spent listening by the listener application **50'** on the known UDP/IP port is maximized by using a multithread program execution approach. Referring to FIG. **3**, for this embodiment, two threads are utilized; a listen thread **100** waits for data on the network access port **104** and a load thread **108** processes the received data and stores it in the database **44**.

[0029] In this embodiment, referring to FIG. **4**, the listen thread waits in STEP **300** for one of three events to occur. The three events are the shutdown event (STEP **310**), the data ready event (listen for socket data) (STEP **320**), and the minute timer event (STEP **330**). The shutdown event (STEP **310**) is triggered when the service Application Protocol. Interface (API) requests to shutdown the listener application (STEP **340**). The data ready event (STEP **320**) is triggered when data is available on the UDP/IP network port so that data can be read (STEP **350**) and put into a message queue **110** (STEP **360**).

[0030] The minute timer event (STEP **330**) is unlike the other two events in that it is a periodic event triggered once per minute. Each, time the minute timer is triggered, the current values or the configured parameters that are set for the ventilators **20** are appended to a table of data (STEP **370**), the trend data table, described below, with a time stamp. Any trend data older than a configured time (for example, a default of 72 hours) is purged from the trend data table (STEP **380**). Also any medical ventilator data in the active device data table described below older than two minutes is purged to prevent possible user misinterpretation of the data. In a particular embodiment of the invention, each, time the minute timer is triggered (STEP **330**), there is a cheek to see if it is time for a scheduled "snapshot" (STEP **390**) of the active data to be recorded. A "snapshot" is the action of copying all of a medical device's data from the active data table and placing it into a snapshot table, described below, with a time stamp. Snapshots are used to track the medical device state at the time of important events (STEP **400**) for reporting purposes.

[0031] Referring also to FIG. **5**, according to the invention, once the listen thread **100** receives data, the load thread **108** waits for the data to arrive in the message queue (STEP **410**). Once the data has been received in the message queue, all values are analyzed from the data (STEP **420**) and the name of the value is determined (STEP **430**). If the value exists (STEP **440**), and has not changed (STEP **460**), no changes are made and the loop is continued. If the value does not exist (STEP **440**), a value is created (STEP **450**) and the loop is continued. If the value has changed (STEP **460**), the value is updated tor the device (STEP **470**) and the loop is continued. After all of the values are processed STEP **420** adjustments are made to the data. If a setting was changed on the ventilator or an alarm was triggered (STEP **490**), all active data is transferred to the snapshot table with a timestamp (STEP **500**). In one embodiment, an alert is sent by Simple Mail Transport Protocol (SMTP) or telephony (STEP **521**) to a remote device such as a pager. After all processing is finished, the Just_Changed_ flags are cleared (STEP **531**).

[0032] In more detail once the message is received by the listen thread, the individual medical ventilator values are parsed out of the data stream by the parser **60** (FIG. **2**). Referring also to FIG. **6**, in one embodiment, for example, data received from the medical ventilator **20** (STEP **415**) includes a single line with tour ASCII values separated by spaces and terminated with a carriage return ("500 020 030 004"). The name of each, value is determined (STEP **600**; STEP **601**; STEP **602**; STEP **603**;) by using the data protocol of the medical ventilator, for loading into the active data table of the database **44**.

[0033] The data response may contain for example, tidal volume, oxygen setting, a high pressure limit and an inspiration time and may be associated with the following database names; chTV, stFI**02**, stPPAWhi, stITIME. The database

names and the medical device identification, for example, DevA, are used as keys in the active data table described below. According to this embodiment of the invention, the first row to be added to the database in the active data table (STEP **650**) in the-above example is: DevA, chTV, 500. A new row is created in the active data table for the device value if the device value does not already exist (STEP **440**). No changes are made if the device value is the same as the one already in the table. The device valise is only updated (STEP **470**) if it is different from the value already in the table (STEP **460**).

[0034] Any adjustments (STEP **480**) to the device **20** that need to be made are done once all the data has been parsed and loaded. Examples of adjustments (STEP **480**) include scaling the inspiration time down to hundredths of seconds. If the adjustment requires checking the values of multiple parameters, a temporary device value name may be used when loading this data. The adjustment process stores the value into the final device data name to avoid flickering in the displays. For example, the adjustment process might load the inspiration time value of **004** with the temporary name of sxITIME during the loading process (STEP **603**), check the ventilation mode value (STEP **604**), and if Mode=Pressure, save the value of 0.04 with the stITIME name during the adjustment process (STEP **605**).

[0035] According to one embodiment of the invention, the monitoring application **50** can request that data be sent by the ventilator **20** using a pollster application or pollster portion **50"** of the device application **50**. The pollster application **50"** sends commands **64** to the medical device **20** over TCP/IP socket connections to elicit data responses. The socket connections are tracked in a connection list so that the connection can be held open from command to command. The pollster application waits for connection request at a predefined or well known TCP/IP port. When the medical device **20** sends a connection request to that port, the pollster application **50"** makes the connection by way of another random port using the standard TCP/IP "accept" functionality.

[0036] In one embodiment of this application, referring to FIG. **7**, the dual thread approach is also used. A polling thread **400** and a load thread **410** are executing in the pollster application **50"**. Referring to FIG. **8**, in one embodiment of the invention, the polling thread waits (STEP **600**) for one of five events to occur. The first three of the five events are the same as in the listen thread described above: the shutdown event, data ready event (listen, socket data), and minute timer event.

[0037] In this embodiment, referring to FIG. **8**, the polling thread waits in STEP **609** for one of the five events to occur. The shut down event (STEP **610**) is triggered, like in the listen thread described above, when the service Applications Protocol Interface (API) requests to shutdown the polling application (STEP **640**). The data ready event (STEP **620**) is triggered either when data to be read is available on the UDP/IP port or when there is notification that the socket connection has been broken (STEP **627**). When data is available to be read (STEP **651**), the data is appended to the message queue (STEP **660**).

[0038] The minute timer event (STEP **630**) is a periodic event triggered once per minute. Each time the minute timer is triggered, the current values or the configured parameters are appended to a table of data (STEP **670**), the trend data table described below, with a time stamp. Any trend data older than a configured time (for example, default of 72 hours) is purged from the trend data table (STEP **680**). Also any device data in the active device data table, described below, older than, two minutes is purged to prevent possible user misinterpretation of the data. In a particular embodiment of the invention, each time the minute timer is triggered, there is a check to determine if it is time for a scheduled "snapshot" of the active data to be recorded (STEP **690**). Snapshots are used to track the medical ventilator state at the time of imported events (STEP **700**) for reporting purposes.

[0039] Referring also to FIG. **9**, in addition, the polling thread **400** also waits (STEP **595**) for a connection request event (STEP **615**) (connect socket data) and a polling event (polling timer) (STEP **635**). The connection, request event (STEP **615**) is triggered when a medical ventilator **20** requests a socket connection using the well known TCP/IP Port for this specific application **50"** (STEP **612**). The connection, once made, is stored in a connection list (STEP **625**). A new entry is made in a device list table in the database **44** the first time that a response is received by the application program **50** from a ventilator. The medical ventilator's IP address is used to create a unique medical device identification in the table. Commands or polls are sent to each established connection once per second (STEP **635**).

[0040] The polling event is triggered ten times a second so that commands (polls) can be spaced apart in a random pattern to reduce the possibility that many requests will be sent by the various application programs at the same time thereby interfering with access to the network. Commands are not sent if the data response from the device (STEP **655**) has not been received from the last command sent. The connection stops waiting after three such missed poll events and then is closed.

[0041] Referring now to FIG. **10**, in more detail, there are four different types of tables in the database; Device Data Tables **500**, Device Configuration Tables **510**; Customization Tables **520**, and Device Specific Tables **530**. The Device Data tables **500** hold data acquired from the medical devices **20**. There are tables for holding the latest device values **502**, device snapshot information **504**, trending data **506**, and a record of setting changes and alarm events **508**. A Just_Changed_flag **509** Is set (STEP **531**) within the table row when data is updated in the device data table. This flag **509** allows queries to determine if either a setting has just changed or alarm condition has just occurred. When one of these conditions is met, a snapshot of the active data is saved into the snapshot table **504** (STEPS **400** or **700**, FIGS. **4** and **8**, respectively). A new entry is appended to the log of events table **508** marking this event. Remote alerts can be sent (STEP **521**) to numeric or alphanumeric pagers when specific alarms occur. The alarming medical ventilator **20** is associated with a patient and the patient is associated with a pager before a remote alert can be sent. The Just_Changed_flag **509** is cleared (STEP **531**) for all the active device data after all of the checks have been made.

[0042] The Device Configuration tables **510** store the information about the institution like the list of beds, patients, users, etc. The history **512** of the mappings of devices, beds, and patients is stored, in the configuration table. This table is important when recovering patient information after changes have been made. The Customization tables **520** hold information that controls the appearance of most of the user interface. All customizations are stored together to facilitate future expansion of the system. Customizations are organized by Group **522**, Subgroup **524**, and Device Type **526**. The customizations are stored in fields that have generic names

(Param**1**, Param**2**, . . .) so the database form used to enter the data must operate in conjunction with the web page that runs the query in order to correctly interpret the values. The Device Specific tables **530** store information specific to a medical device type used for data acquisition. There are tables to mark the values that are to be trended **532** and tables to hold the descriptions of alarms, settings, and measured values **534**.

[0043] Data is extracted from the database **44** using Queries. Queries have been developed to speed the eases where these tables must be joined to access the data. For example, there is a query that combines the header information in the Snapshot table with the data in the Snapshot Data table. Queries are also used to hold business rules like determining when to take a snapshot because an alarm condition has just occurred. There are some stored procedures, or action queries depending on the database technology, used to manage the TrendData table.

[0044] Queries are made to the system through the web software **71**. In one embodiment, for example, there are three main parts of the user interface **70**; Monitoring, Reporting, and Administration. These functions are displayed as 'Monitory', 'Report', and 'Administer' buttons, respectively, at the bottom right side of the semen. The Monitor screen, for example, is arranged to allow the user to view information on all patient beds, or groups of patient beds, simultaneously, with the option to view more detailed information on any individual patient bed. The Monitor screen provides information such as patient settings, measured values, and alarm values. The Report screen, for example, allows the user to choose from Trends, Log of Events, Snapshots, etc. to view. After one of these reports is chosen, the user is taken through a series of screens to set up the parameters necessary to see the specified report. The Administration screen, for example, allows the user to add, remove, or change the status of patients and medical devices on the network.

[0045] In more detail, three different views are available to the user through the Monitor screen: the matrix view **750**, the list view **700**, and the details view **770**. Referring to FIG. **11**, in one embodiment Matrix View screen **750** is primarily used at a central monitoring station. This screen **750** is filled with a matrix displaying the status of all configured beds **751***a*-**751***n*, generally **751**, including beds without assigned patients. The number of columns in this matrix may be adjusted for optimal viewing. In one embodiment, no more than twenty beds **751** are displayed on the screen **750** at once. If there are more configured beds **751** than can fit on the screen, then tabs (not shown) will appear on the screen to select from configured groups of beds; e.g., view all of the NICO beds, SICU beds, or Step Down beds. In one embodiment, the user interface **70** is a web page.

[0046] Each bed **751** Is displayed in its own web frame cell **752***a*-**752***n* (generally **752**) with a border, and parameter settings are displayed if there is an assigned patient and medical ventilator. In one embodiment, the displayed information as well as the border color is medical ventilator dependent. The server side code looks in the customization tables **520** for information about which device data to display for the assigned medical ventilator. This information includes tor example, titles, units, and most importantly the data name in the vent data table. The device data is then looked up in the vent data table, combined with the title and units, and then sent to the client web browser **48**. In a particular embodiment, if there is an alarm condition on the device, the border will change to bright red and the text of the alarm will be displayed. In a further embodiment, if the alarms have not been silenced on the device, an audible alarm will sound. The contents of each bed web frame **752** are refreshed every two seconds.

[0047] Whereas the matrix view web page **750** with its multiple frames and frequent refreshes requires more bandwidth than is commonly available over dialup lines, the list view web page **760**, illustrated in FIG. **12**, is optimized for slow connections. In one embodiment, the list view page **760** has a single frame displaying information only about the active beds **751**. Much more information is displayed, for each bed **751** in the list view **760** as compared to the matrix view **750**, which reduces the need to go to the details view **770**. The user is able to display a more detailed view by clicking on the bed title, which splits the screen in the same way as the matrix view.

[0048] If the user clicks anywhere within a web frame cell **752** on the matrix view web page **750**, i.e. selects a patient bed **751**, then a web page **760** with, two different sections will appear. In one embodiment, the top section of the screen will display a small version of the matrix view web page **750** while the bottom section will display detailed information, about the selected bed.

[0049] The detailed view web page **770**, illustrated in FIG. **13**, for example, is divided, into five different sections: title, settings, simple settings, other measurements, and alarms. The title section identifies the bed and. patient and has the ability to send an alert to a remote user, allow the user to view this detail section **770** as a full screen, or to print the page.

[0050] In one embodiment of the detailed view **770**, the settings section is generally set up as a table with five rows: Primary Setting, Secondary Setting (if supported by the medical, device). High Alarm Limit, Measurement, Low Alarm Limit. Each primary setting is labeled with a title and units. If the medical device has dual modes, then the secondary settings are displayed below the primary settings. Each column shows information about one setting with any related measured value and alarm limit. The alarms and measurements are displayed proportionally to the maximum setting value. If the measured value is outside the alarm limit, then the alarm background will be highlighted in red to draw attention to it. Three rows will be used if there is no maximum value set for the setting and no secondary settings.

[0051] The simple settings section displays those settings that have no related alarm limits or measured values. Also included in this section is a summary wrap-up of the apnea settings when displaying data from a ventilator device **20**. The Other Measurements section displays those measured values that have no related alarm limits or settings. The Alarms section displays the current medical device alarm conditions.

[0052] Information may be accessed as a report. The reporting system provides the maximum amount of flexibility for adding, modifying, and removing individual, reports. Reports are web pages that may require a number of parameters such as the patient identification. The customization tables in the database are used extensively to store navigational information. The starting screen of the report navigation is the list of available reports obtained from the database; e.g., Snapshots, Flowsheets, Trends, Log of Events, and Log of Remote Alerts. The user is always able to get back to this starting screen by clicking on the Begin button on the top of the screen.

[0053] The customization table holds the order of report parameter web pages for each report. When the user selects a

report, the server side uses the customization table to determine to display either one of the report parameter web pages or the report web page itself. These pages allow the user to specify the value of a parameter such as patient, bed, or time range. So if the report is only for an individual patient, the patient parameter page will display only the list of patients with their assigned beds that have data for the report. The time range parameter page sets both a start and end time defaulting to the last twelve hours of data. All times are to be bounded by date range in the data itself. The user is able to directly enter dates by typing on the keyboard or click on a set of buttons to adjust by day, hour or minute. There are buttons to go back to the "last" twelve hours, move the range twelve hours ahead or behind. Other parameter pages may be developed specifically for a given report. The value of each parameter is stored as a session variable on the server. The session, variable also stores the value of current "step" in the order of parameters. The current step is decremented when the user clicks on the Back button and the appropriate parameter page is displayed.

[0054] Although the reporting system is built to be extensible, there are a few reports considered to be standard. The Snapshot report shows a detailed summary of the state of a medical ventilator **20** at the time of a triggering event. The user must first select a patient. Then, a time range is used to create a filtered list of snapshot reports for the patient. The user then chooses from this list to display all of the measured values, settings, and alarms at the time of the snapshot.

[0055] The Event Log report displays all of the important events that have occurred for a patient over a specified time frame. The user first must select a patient and time range for the report. Then there are several specific options for snapshot reports including different event filters, report pagination and sort order. Finally the report is displayed detailing all of the setting changes, alarm conditions and clinician interventions.

[0056] The Trend report is a graphical line chart showing the movement of measured values. The user first must select a patient and time range for the report. Then the report is displayed with a separate line chart for each trend parameter. The user can choose to magnify the size of individual trend parameter charts.

[0057] These reports process the raw collected data into diagnostic information using "smart" software. A series of institution-specific hierarchical alarms may be viewed for each patient, in which the most critical alarm, is ranked first, followed by each alarm in order of importance. As an example, new alarms will be created that may not be present on the medical device. Such an example might consist of a high tidal volume alarm tor a ventilator that does not have one built-in. Clinicians often compare parameters in the context of other parameters when making a clinical decision. This decision making process is encapsulated into a rules-based system with the collected clinical signs and key respiratory data as input and suggested decisions as output. The result is an indicator suggesting whether or not the patient is progressing towards the need for clinical intervention. These results will be combined together into a triage report ranking patients by their clinical progress.

[0058] The administration pages are used to manage the assignment of medical devices to beds with patients. This administration starts with the display of all current associations and the list of unassigned medical devices. The user will be able to click on a button to admit a patient, edit a patient, move a patient and medical device, disconnect a medical, device, or swap a medical device. These actions require a number of steps where the user will make selections. The values of these selections are stored in session variables until it is possible to perform the action. The user will be able to cancel the action or move backwards by one step.

[0059] The user can choose to admit a patient. The user must provide the patient name along with an optional medical record number and comment. The user then selects the bed from the list of unassigned, available beds. The user selects the medical device from the list of unassigned medical devices. The patient, bed, and medical device are all assigned to each other after these selections have been made.

[0060] The user can choose to edit the information about a patient. The user must first select the patient to edit. Then the selected patient's information will be presented in an editable format. When the user finishes, the changes will be made.

[0061] The user can choose to dissociate the patient from the bed, where the patient may remain in the bed but is no longer connected to the medical device. Once the user selects the patient, the patient will be unassigned from the bed and medical device. This association is remembered in the database. The institution can elect to purge the data tables for this association from the database at this point or move them into an archive database.

[0062] The user can choose to move the patient to another bed. The user first selects the patient to be moved from a list of assigned beds. Then the destination bed is chosen from the list of unassigned beds. The user can also choose to swap a currently assigned medical device with an unassigned medical device. This may be necessary when preventative maintenance is performed. The user first selects the patient to move from a list of assigned beds. Then an unassigned medical device is selected from the list of unassigned medical devices.

[0063] Requiring the user to log on before sensitive data is displayed on the web pages insures patient confidentiality. There is an option, button to increase the level of data access in the administration section. A log on screen is displayed when the user requests a high data access level for the current web session. The logon screen requires certain information from the user in order to obtain patient information.

[0064] A set of monitoring pages are available specially formatted for viewing on web browsers of handheld mobile devices. The main requirement is that these mobile devices have small displays with tab aspect ratios. The user will be able to display a modified list view.

[0065] There are cases when a clinician signature is required to validate that the snapshot data shown on the handheld mobile device was compared to the data displayed on the medical device **20**. This requites a clinician to be in possession of a handheld mobile device and he physically present at a patient's bedside. There are special screens on the handheld mobile device that may be viewed only by logged on users. These screens on the handheld mobile device display the device data to the user who then directly compares this data to that on the medical device. If everything matches, then the user can initiate a manual, snapshot of the data which includes his or her signoff signature.

[0066] All of the data from the medical devices connected to a patient acquired by the network monitoring system and reports can be stored electronically as part of the patient's medical record. Alternatively, a hard-copy printout of the data can be included with the patient's permanent medical record.

[0067] While the present invention has been described in terms of certain exemplary preferred embodiments, it will be readily understood and appreciated by one of ordinary skill in

the art that it is not so limited, and that many additions, deletions and modifications to the preferred embodiments may be made within the scope of the invention as hereafter claimed. Accordingly, the scope of the invention is limited, only by the scope of the appended claims.

What is claimed is:

1-16. (canceled)

17. A method for monitoring a plurality of patients comprising:

providing a plurality of medical devices, wherein at least two of said medical devices are heterogeneous types;

collecting data from said plurality of medical devices via a dedicated medical device application;

transmitting said data over a network to a server;

determining, by the server, is an alarm has occurred;

determining, by the server, if the alarm is a new alarm having a different value from a previous alarm by comparing the present alarm value with the prior alarm value;

setting a just-changed-flag if the alarm is a new alarm; and

storing the alarm value and the just-changed-flag in a database.

18. The method of claim **17** further comprising the step of time-stamping the alarm.

19. The method of claim **17** wherein a query by a user returns a value only if the just-changed-flag is set in the database.

20. A method of transmitting, to a user, an alarm resulting from data from a medical device attached to a network, the method comprising:

associating, by a server, a patient, a bed and the medical device with a user's communication device;

polling, by the server, the medical device across the network to obtain a plurality of data values;

determining, by the server, if any of the data results in an alarm condition; and

transmitting, by the server, a notification of the alarm to notify the user using the communication device.

21. A method of transmitting, to a user's communications device, data from a medical device attached to a network, the method comprising:

creating, by a server, a channel between a medical device with a user's communication device;

polling, by the server, the medical device across the network to obtain a plurality of data values having a data bandwidth and a plurality of data formats;

determining, by the server, the bandwidth needed to transmit the data values to the user's communication device over the channel; and

transmitting, by the server, data to the user's communication device in a format in response to the data bandwidth of the channel, the data bandwidth of the device and the data bandwidth of the format of the data.

22. A method of transmitting, to a user, an alarm resulting from data from a medical device attached to a network, the method comprising:

polling, by a server, the medical device across the network to obtain a plurality of data values;

determining, by the server, if any of the data results in a plurality of alarm conditions; ranking, by the server, the plurality of alarm conditions into a hierarchy; and displaying, by the server, the hierarchy of alarms to the user.

23. The method of claim **22** further comprising the steps of:

analyzing, by the server, the plurality of data using a rules-based computer program; and

displaying, by the server, the prognosis based on the analysis.

24. A method of verifying that data being received by a server accurately corresponds to the data from the medical device comprising the steps of

providing a communications device having a display and receiving data from the server;

executing a verification program on the communication device that is capable of accepting a signature from a user;

comparing, by the user, data displayed on the display of the communications device with the data displayed by the medical device;

if the data displayed on the display of the communications device and the data displayed by the medical device is the same, capturing the data and the user's signature on the communications device and transmitting the captured data and user's signature to the server.

25. The method of claim **24** wherein if the data displayed on the display of the communications device and the data displayed by the medical device are different, allowing the user to send an alarm to the server using the communications device.

* * * * *