(12) INTERNATIONAL APPLICATION PUBLISHED UNDER THE PATENT COOPERATION TREATY (PCT)

(19) World Intellectual Property Organization
International Bureau

(43) International Publication Date
22 December 2011 (22.12.2011)

PCT

(10) International Publication Number
WO 2011/160046 A2

(51) International Patent Classification:
E21B 47/01 (2006.01) *E21B 47/06* (2006.01)

(21) International Application Number:
PCT/US2011/040924

(22) International Filing Date:
17 June 2011 (17.06.2011)

(25) Filing Language: English

(26) Publication Language: English

(30) Priority Data:
61/356,434 18 June 2010 (18.06.2010) US

(71) Applicant *(for all designated States except US)*: **BAKER HUGHES INCORPORATED** [US/US]; PO Box 4740, Houston, Texas 77210-4740 (US).

(72) Inventors; and

(75) Inventors/Applicants *(for US only)*: **LEHR, Joerg** [DE/DE]; Riethkamp 44, Lower Saxony, 29229 Celle (DE). **JUNG, Sebastian** [DE/DE]; Tischbeinstr. 2, Lower Saxony, 30916 Isernhagen (DE). **SCHWARZE, Sascha** [DE/DE]; Weher Strasse 121, 32369 Rahden (DE). **OVERMEYER, Ludger** [DE/DE]; Alte Muhle 19, 31535 Bordenau (DE). **KRUHN, Tobias** [DE/DE]; Davenstedter Holz 59, 30455 Hannover (DE).

(81) Designated States *(unless otherwise indicated, for every kind of national protection available)*: AE, AG, AL, AM, AO, AT, AU, AZ, BA, BB, BG, BH, BR, BW, BY, BZ, CA, CH, CL, CN, CO, CR, CU, CZ, DE, DK, DM, DO, DZ, EC, EE, EG, ES, FI, GB, GD, GE, GH, GM, GT, HN, HR, HU, ID, IL, IN, IS, JP, KE, KG, KM, KN, KP, KR, KZ, LA, LC, LK, LR, LS, LT, LU, LY, MA, MD, ME, MG, MK, MN, MW, MX, MY, MZ, NA, NG, NI, NO, NZ, OM, PE, PG, PH, PL, PT, RO, RS, RU, SC, SD, SE, SG, SK, SL, SM, ST, SV, SY, TH, TJ, TM, TN, TR, TT, TZ, UA, UG, US, UZ, VC, VN, ZA, ZM, ZW.

(84) Designated States *(unless otherwise indicated, for every kind of regional protection available)*: ARIPO (BW, GH, GM, KE, LR, LS, MW, MZ, NA, SD, SL, SZ, TZ, UG, ZM, ZW), Eurasian (AM, AZ, BY, KG, KZ, MD, RU, TJ, TM), European (AL, AT, BE, BG, CH, CY, CZ, DE, DK, EE, ES, FI, FR, GB, GR, HR, HU, IE, IS, IT, LT, LU,

[Continued on next page]

(54) Title: APPARATUS FOR USE DOWNHOLE INCLUDING DEVICES HAVING HEAT CARRIER CHANNELS

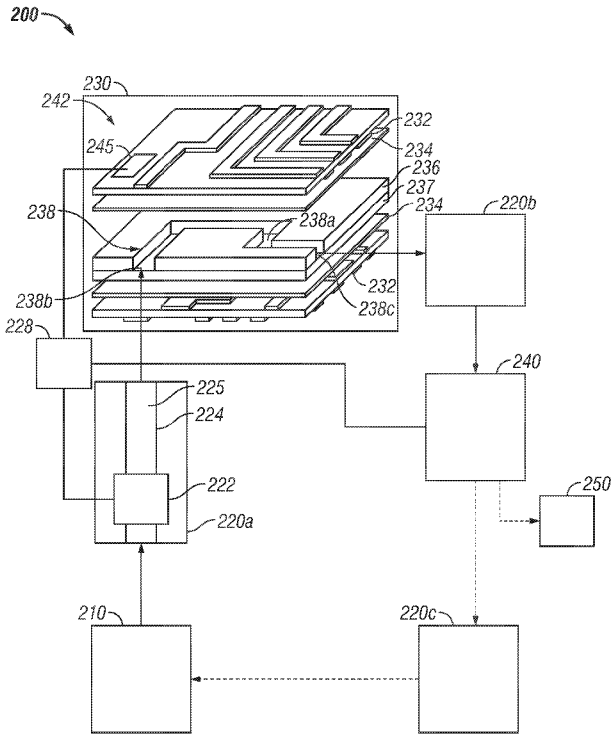

FIG. 2

(57) Abstract: A method and apparatus for regulating a temperature of a device in a tool used in a wellbore is disclosed. The device generally includes a substrate and a heat source associated with the substrate that induces heat into the substrate. The substrate includes a fluid channel therein. A fluid system provides the fluid into the fluid channel and out of the fluid channel to control the temperature of the component.

WO 2011/160046 A2

LV, MC, MK, MT, NL, NO, PL, PT, RO, RS, SE, SI, SK, SM, TR), OAPI (BF, BJ, CF, CG, CI, CM, GA, GN, GQ, GW, ML, MR, NE, SN, TD, TG).

Declarations under Rule 4.17:

— *as to applicant's entitlement to apply for and be granted a patent (Rule 4.17(ii))*

— *as to the applicant's entitlement to claim the priority of the earlier application (Rule 4.17(iii))*

Published:

— *without international search report and to be republished upon receipt of that report (Rule 48.2(g))*

APPARATUS FOR USE DOWNHOLE INCLUDING DEVICES HAVING HEAT CARRIER CHANNELS

CROSS-REFERENCE TO RELATED APPLICATIONS

[0001] This application claims priority to United States Provisional Application Serial No. 61/356,434, filed June 18, 2010.

BACKGROUND OF THE DISCLOSURE

1. Field of the Disclosure

[0002] The present disclosure relates to regulating temperature of devices in a tool operating in a wellbore.

2. Description of the Related Art

[0003] Measurement-while-drilling operations generally employ a drilling tool that includes various sensors, processors and devices operating downhole in order to enable drilling operations. Typical downhole devices are composed of a multitude of printed circuit boards and individual components like sensors and integrated circuits. The lifetime of these electrical components depends on various factors including their operating temperature, their temperature specification, and temperature stability (low temperature variations have an important impact). As drilling takes place at increasingly greater depths and hence higher temperatures, there is a growing demand for downhole devices that operate at high temperatures.

[0004] The particular circumstances involved in operating devices in a measurement-while-drilling tool provide further difficulties with respect to heat generation. Due to a generally small installation space in the tool and the increasing level of heat generation, these extreme heat quantities over a small volume can be created and lead to overheating. The need for power dissipation therefore increases significantly. Using a temperature control system for an electrical device can significantly enhance the lifetime of the component. Therefore, there is a need to regulate the temperature of devices operating in a tool in a wellbore environment.

SUMMARY OF THE DISCLOSURE

[0005] In one aspect, the disclosure provides an apparatus that includes a heat source, a channel associated with the heat source and a device configured to flow a carrier through the channel that absorbs heat from the heat source.

[0006] In another aspect, the disclosure provides an apparatus for use in a downhole tool, including a substrate; a heat source associated with the substrate, the heat source inducing heat into the substrate; a fluid channel in the substrate; and a fluid flow unit configured to flow a fluid through the fluid channel to regulate a temperature of the component.

[0007] In another aspect, the present disclosure provides a method for regulating a temperature of a device in a tool in a wellbore, including providing the device having a substrate having a fluid channel therein in the wellbore; inducing heat from a heat source into the substrate; and flowing a fluid through the fluid channel to regulate the temperature of the device.

BRIEF DESCRIPTION OF THE DRAWINGS

[0008] The present disclosure is best understood with reference to the following figures in which like numerals generally refer to like elements and in which:

FIG. 1 shows a schematic illustration of a drilling system that includes a downhole tool that contains an apparatus for cooling devices in the downhole tool during operation of such tool downhole, according to various embodiments of the present disclosure;

FIG. 2 shows an exemplary embodiment of the apparatus for regulating the temperature of a heat-generating device used in the exemplary tool during downhole operations; and

FIGS. 3-6 show various exemplary embodiments of components that may be used downhole with the exemplary temperature control apparatus disclosed herein.

DETAILED DESCRIPTION OF THE DISCLOSURE

[0009] FIG. 1 shows a schematic illustration of a measurement-while-drilling system 100 that includes an apparatus for cooling various devices used downhole according to various embodiments of the present disclosure. The drilling system 100 has a drill string 120 carrying a drilling assembly 190 (also referred to as a "bottom hole assembly" or "BHA") conveyed in a "wellbore" or "borehole" 126 for drilling the wellbore 126 into geological formations 195. The drilling system 100 may include a conventional derrick 111 erected on a floor 112 that may support a rotary table 114 that may be rotated by a prime mover such as an electric motor (not shown) at a desired rotational speed. The drill string 120 may include tubing such as a drill pipe 122 or a coiled-tubing extending downward from the surface into the borehole 126. The drill string 120 may be pushed into the wellbore 126 when the drill

pipe 122 is used as the tubing. For coiled-tubing applications, a tubing injector (not shown) may be used to move the coiled-tubing from a source thereof, such as a reel (not shown), to the wellbore 126. A drill bit 150 attached to the end of the drill string 120 breaks up the geological formations 195 when the drill bit 150 is rotated. If the drill pipe 122 is used, the drill string 120 may be coupled to a drawworks 130 via a Kelly joint 121, a swivel 128, and a line 129 through a pulley 123. During drilling operations, the drawworks 130 may be operated to control the weight on the drill bit 150 or the "weight on bit," which is an important parameter that affects the rate of penetration (ROP) into the geological formations 195. The operation of the drawworks 130 is well known in the art and is thus not described in detail herein.

[0010] During typical drilling operations, a suitable drilling fluid 131 (also referred to sometimes as "mud" or "drilling mud") from a mud pit (source) 132 may be circulated under pressure through a channel in the drill string 120 by a mud pump 134. The drilling fluid 131 may pass from the mud pump 134 into the drill string 120 via a desurger (not shown), a fluid line 138, and the Kelly joint 121. The drilling fluid 131 is generally discharged downhole at a wellbore bottom 151 through an opening (not shown) in the drill bit 150 and circulates uphole through an annular space 127 between the drill string 120 and the wellbore 126, returning to the mud pit 132 via a return line 135. The drilling fluid 131 lubricates the drill bit 150 and carries wellbore 126 cuttings and/or chips away from the drill bit 150. A flow rate sensor or dynamic pressure sensor S_1 is typically placed in the fluid line 138 and may provide information about the drilling fluid 131 flow rate and/or dynamic pressure. A surface torque sensor S_2 and a surface rotational speed sensor S_3 associated with the drill string 120 may provide information about the torque and the rotational speed of the drill string 120, respectively. Additional sensors (not shown) may be associated with the line 129 to provide the hook load of the drill string 120.

[0011] In one aspect, the drill bit 150 may be rotated by only rotating the drill pipe 122. In another aspect, a downhole motor 155 (mud motor) may be disposed in the BHA 190 to rotate the drill bit 150. The drill pipe 122 may be rotated to supplement the rotational power of the mud motor 155 or to effect changes in the drilling direction. The mud motor 155 may be coupled to the drill bit 150 via a drive shaft (not shown) disposed in a bearing assembly 157. The mud motor 155 may rotate the drill bit 150 when the drilling fluid 131 passes through the mud motor 155 under pressure. The bearing assembly 157 may support the radial and/or the axial forces of the drill bit 150. A stabilizer 158 coupled to the bearing

assembly 157 may act as a centralizer for the lowermost portion of the mud motor 155 and/or the BHA 190.

[0012] In one aspect, a drilling sensor module 159 placed near the drill bit 150 may contain sensors, circuitry, and/or processing software to determine dynamic drilling parameters, such as bit bounce of the drill bit 150, stick-slip of the BHA 190, backward rotation, torque, shocks, borehole pressure, annulus pressure, acceleration measurements, etc. A suitable telemetry and/or communication sub 172 may also be provided to communicate data to and from the surface. The drilling sensor module 159 may process the raw sensor information and/or may transmit the sensor information to a surface control 140 via the telemetry system 172 or a transducer 143 coupled to the fluid line 138, as shown at 145.

[0013] The communication sub 172, the power unit 178, and a formation evaluation (FE) tool 179 may all be connected in tandem with the drill string 120. Flex subs, for example, may be used in connecting the FE tool 179 to the BHA 190. The BHA 190 may perform various measurements, such as pulsed nuclear magnetic resonance (NMR) measurements and/or nuclear density (ND) measurements, for example, while the borehole 126 is being drilled. The BHA 190 may include one or more formation evaluation and/or other tools and/or sensors 177, such as a temperature sensor 177a, capable of making measurements of the downhole mud (drilling fluid) 131 temperature over time and arranged to do so, and/or a mud (drilling fluid) 131 dynamic pressure and/or flow rate sensor 177b, capable of making measurements of the downhole mud (drilling fluid) 131 dynamic pressure and/or flow rate. These various measurement devices may employ, for example, a microprocessor, a multi-layered circuit board or any other electrical components that generate excess heat during their operation. In another aspect, the devices or electrical components may be heated due to exposure to the temperature of the surrounding environment. Such heat-generating devices and/or heated devices may be provided with heat carrier channels proximate to them that provide a circulating heat carrier into and away from the device for removing heat. In one aspect, a heat-generating device or heated device may have a channel integrated therein to provide flow of the heat carrier within the device and to bring the heat carrier into thermal contact with the heat-generating portion (or heated portion) of the device. In another aspect, the heat carrier channel may be provided on one side of the device or may be wrapped around the device.

[0014] The communication sub 172 typically obtains the measurements from the various sensors and transfers the signals, to be processed at the surface. Alternatively, the signals may be processed downhole, using a downhole processor 177c in BHA. The

communication between the surface and the downhole devices may be established using any suitable telemetry technique, including, but not limited to, mud pulse telemetry, electro-magnetic telemetry, acoustic telemetry, and wired pipe. The wired pipe may be: a coiled tubing, in which the tubing caries a communication link; or jointed tubulars, wherein the individual tubulars carry a communication link, such as an electrical conductor or an optical fiber.

[0015] The surface control unit 140 receives and processes signals from one or more other downhole sensors as well as the flow rate sensor S_1, the surface torque sensor S_2, and/or the surface rotational speed sensor S_3 and other sensors used in the drilling system 100. The surface control unit 140 may display desired drilling parameters on a display 142 that may be utilized by an operator to control the drilling operations. The surface control unit 140 may typically include a computer or processor, at least one memory for storing programs and data, and a recorder for recording data. The surface control unit 140 may typically be configured to activate one or more alarms 144 under certain operating conditions.

[0016] The present disclosure provides a temperature control system for controlling temperature of one or more components in the BHA 190 or another apparatus, such as a wireline tools used for logging wellbores. The temperature control system, in general, pumps a heat carrier through a channel or a channel system made proximate to or integrated or embedded in a housing or body of the one or more components in the BHA 190. Such components may include, but are not limited to, electrical components (such as microprocessors, etc.), sensors or devices having multiple layers, such as multilayer circuit boards or substrates. The one or more components may be heat-generating components, components heated by the downhole environment, or other components that may benefit from rapid heat dissipation therefrom. The heat carrier flows through the channel system and carries heat to or away from the component in order to regulate (raise or lower) the temperature of the component. The geometry of the heat carrier channels and their proximity to the heat sources allows not only controlling of the temperature of the components but also allows removing of various hot spots. Although FIG. 1 shows a downhole tool in the wellbore during a drilling operation, the temperature control apparatus disclosed herein is equally applicable in wireline tools that are used to log wells after the wellbore has been drilled, as well as in any other tools used in the wellbore, such as tools or devices used in production wells.

[0017] FIG. 2 shows an exemplary embodiment of a temperature control apparatus 200 for regulating the temperature of a device used in a tool downhole, such as the exemplary

measurement-while-drilling system of FIG. 1. The apparatus 200, in one embodiment, includes a heat carrier storage unit 210, a heat-generating device 230, a heat sink 240, and one or more heat carrier transfer devices 220a-c. In one aspect, the heat-generating device 230 refers to a device that generates heat by operation of the device. In another aspect, the heat-generating device 230 refers to a device that is heated by or absorbs heat from its surrounding environment, such as a downhole environment. In yet another aspect, the heat-generating device 230 refers to a device that is heated by operation of another device in thermal contact with the heat-generating device. Such a device may also be referred to as a hot device or heat source or device whose temperature is desired to be controlled or regulated. A heat carrier 225 flows from the heat carrier storage unit 210 to the heat-generating device 230 and finally to a heat sink 240 via the one or more heat carrier transfer devices 220a-c. In the process, the heat carrier 225 transfers heat generated at the heat-generating device 230 to the heat sink 240, which in turn may distribute the heat into the surrounding environment. In one embodiment, the heat carrier 225 is stored at the heat sink 240 upon arrival at the heat sink. In another embodiment, the heat carrier 225 may be transported to and stored in a storage container 250 once heat has been transferred to the heat sink 240. In another embodiment, the heat carrier 225 returns to the heat carrier storage unit 210 once heat has been transferred from the heat carrier 225 to the heat sink 240.

[0018]The heat carrier 225 is a medium that is able to absorb or resorb thermal energy. The heat carrier may be in a gaseous, liquid or solid state or in any combination of these states. The thermal energy is stored in the heat carrier by temperature changes of the heat carrier, in chemical transformations or phase changes of the heat carrier or by any combination of these processes. The heat carrier 225 may be selected according to various selection criteria, such as the desired operating temperature of the heat-generating device 230 as well as the heat capacity, movability, viscosity and durability of the heat carrier 225. In an aspect in which the heat carrier 225 is a fluid, the fluid may be selected to have a boiling point that allows heat storage using the latent heat of the phase transition from liquid to gaseous. In another aspect in which the heat carrier is solid, the solid material may be selected to have a melting point that allows heat storage using the latent heat of the phase transition from solid to liquid.

[0019] In one aspect, the one or more heat carrier transfer devices 220a-c includes a thermal conduit system 224 for moving the heat carrier throughout the temperature control apparatus 200. The thermal conduit system 224 may include tubes, hoses or other encapsulation devices that have an entrance and an exit and encapsulate the heat carrier. The

geometry and material of the heat carrier transfer device may be selected depending on the application, amount of dissipated heat and desired temperature gradient. In one embodiment, the thermal conduit system 224 is arranged to provide a closed-loop system in which the heat carrier 225 moves from the heat carrier storage unit 210 to a channel of the heat-generating device 230 and then to the heat sink device 240 and back to the heat carrier storage unit 210. In another embodiment, the thermal conduit system is arranged provide an open loop system in which the heat carrier 225 moves from the heat carrier storage unit 210 to a channel of the heat-generating device 230 and then to the heat sink device 240. An exemplary open loop system may include heat carrier transfer devices 220a and 220b but not the heat carrier transfer device 220c which otherwise returns the heat carrier 225 from the heat sink 240 to the heat carrier storage unit 210. Although the exemplary temperature control apparatus 200 has been described with respect to three heat carrier transfer devices 220a-c, this is not meant to be a limitation of the disclosure. Any number of heat carrier transfer devices may be used within the scope of the disclosure.

[0020] In one aspect, at least one of the heat carrier transfer devices, such as heat carrier transfer device 220a, includes a pump 222 for circulating the heat carrier 225 throughout the temperature control apparatus 200. The pump 222 may be selected according to various criteria, such as flow rate, pressure difference, operating temperature, power consumption, size, weight and durability under downhole conditions. In an alternate embodiment, a passive device, such as a heat pipe, may be used in place of the pump 222.

[0021] In one embodiment, the heat-generating device 230 includes a multi-layer circuit board 242 or individual electronic components or sensors having a multilayer structure. The exemplary multi-layer circuit board 242 includes at least one printed circuit board 232, one or more insulating layers 234, a cooling layer 236 and a carrier layer 237. In the exemplary multi-layer circuit board 242 of FIG. 2, two circuit boards 232 are coupled with the cooling layer 236 such that one circuit board is coupled to a top part of the cooling layer and a second circuit board is coupled to a bottom part of the cooling layer. An insulating layer 234 may be disposed between the circuit boards 232 and the cooling layer 236 to provide electrical isolation between the heat carrier and the various electrical components of the circuit board 242. The insulating layer provides electrical isolation between the heat carrier and the heat-generating elements of the device and also allows heat transfer across the insulating layer between the heat carrier and the heat-generating elements of the device. Insulating the heat carrier from the various electrical components therefore allows direct cooling of conductive or semi-conductive elements. However, if the electrical

components and the heat carrier do not require electrical isolation, the heat-generating device may be assembled without the one or more insulating layers 234 in one embodiment. A channel system 238 extends through the cooling layer 236 to provide a flow path for the heat carrier 225 through the multi-layer circuit board 230. The circuit boards 232 provide a top and bottom side of the channel 238. Therefore, at least one circuit board is in thermal contact with the heat carrier flowing through the channel system 238 therein, wherein the heat transfers from the circuit board to the heat carrier 225. Although FIG. 2 shows a single channel 238a, any number of suitable channels may be provide for the purposes of this disclosure. The heat carrier 225 enters the channel 238 at an inlet or port 238b, moves through the channel 238a, thereby removing heat from the circuit board 232. The heat carrier 225 exits the channel 238a at an outlet or port 238c. The heat carrier transfer device 220b is connected to the channel outlet 238c for removal of the heat carrier to heat sink 240.

[0022] The heat sink 240 absorbs or resorbs heat from the heat carrier 225 and dissipates it to a heat carrier storage unit 210. In one embodiment, heat is passively conducted to the environment, such as the drilling mud passing through the downhole tool. In another embodiment a heat pump actively transfers heat from the heat carrier 225 to the surrounding environment. The heat pump may move heat from the heat carrier 225 to the environment using mechanical work, where the source has a higher temperature than the environment. This provides an efficient transfer of heat since the temperature of the hot side of the heat pump is higher than the temperature of the environment and further since the environment has a much greater heat capacity. Such a system allows a rapid transfer of heat and brings the hot side of the heat pump close to thermal equilibrium with the environment, thereby lowering its temperature. In another embodiment the heat energy may be stored in a chemical transformation or a phase change reaction.

[0023] A sensor 245 may be disposed at or proximate the heat-generating device 230 in order to regulate operation of the temperature control apparatus 200. The sensor 245 may be configured to provide a suitable measurement to a controller 228. In one aspect, the measurement is a temperature measurement. The controller 228 may be responsive to a specific temperature of the heat-generating device and be configured to maintain the heat-generating device within a specified temperature range. Alternatively, the controller 228 may be responsive to a temperature gradient between the heat-generating device 230 and the surrounding environment and may be configured to maintain the temperature gradient between the heat-generating device and the environment within a specified range. In one aspect, the controller 228 may affect an operation of the pump 222 to provide faster or slower

circulation of the heat carrier 225 through channel 238a. In another aspect, the controller 228 may affect operation of the heat sink 240 (i.e., the heat pump) to decrease or increase a rate at which heat is removed from the heat carrier 225 to the surrounding environment. The controller may also control the temperature of the heat sink (e.g. the temperature of the "cold" side of the heat pump). It is noted that although the sensor is described herein as providing a temperature measurement, in other aspects, the sensor may be configured to provide other measurements, such as a flow rate of the heat carrier through the channel system 238.

[0024] FIGS. 3-6 show various exemplary embodiments of components that may be used downhole with the exemplary temperature control apparatus disclosed herein. FIG. 3 shows a side view of an exemplary printed circuit board 300 having various electronic components 302a-b connected to the circuit board. The electronic components 302a-b are shown on an outer surface of the circuit board but may also be components integrated into the circuit board in one embodiment. In one aspect, the printed circuit board 300 may include a multilayer polyamide board 304 having internal electrical connections 309. Electrical components are attached to the board 304 via electrical feedthroughs 307 which pass through the board 304 to a soldering connection 305 opposite the electrical components. In another embodiment, the electrical components are surface-mounted devices without electrical feedthroughs. One or more channels are provided within the printed circuit board 300 to provide circulation of a heat carrier throughout the board and to heat-generating components of the board. The channels may be routed in any manner around the heat-generating components to regulate temperature. Inlets 238b1 and 238b2 and outlets 238c1 and 238c2 to the one or more channels are shown in the side view of FIG. 3. In an exemplary embodiment inlet 238b1 and outlet 238c1 may provide a channel for temperature control of electronic component 302a, and inlet 238b2 and outlet 238c2 may provide a channel for temperature control of electronic component 302b.

[0025] FIG. 4 shows a side view of an exemplary bare die 400 that may be cooled using the exemplary temperature control apparatus disclosed herein. In one aspect, the bare die includes a bulk substrate 404, a buried substrate 406 and an active layer 408 with electronic components. The bare die may have a metal 402 connected to the components of the active layer 408 along path 410. In one aspect, the metal may be a conductive aluminum path providing an electrical connection to the components of the active layer 408. One or more channels are provided within the bare die 400 to provide circulation of a heat carrier throughout the board and to heat-generating components of the bare die. The channels may

be routed in any manner around the heat-generating components to regulate temperature. Inlets 238b1 and 238b2 and outlets 238c1 and 238c2 to the one or more channels are shown in the side view of FIG. 4. In an exemplary embodiment inlet 238b1 and outlet 238c1 may provide a first channel throughout the bare die and inlet 238b2 and outlet 238c2 may provide a second channel throughout the bare die.

[0026] FIG. 5 shows a side view of an exemplary housed component 500 that may be cooled using the exemplary temperature control apparatus disclosed herein. In one aspect, plastic/ceramic housing 504 encases die 502. Electrical connectors 506 provide an electrical connection to the housing 504. Wire bonds 508 provide an electrical connection between electrical connections and the die 502 through the housing 504. One or more channels are provided within the housing 500 to provide circulation of a heat carrier throughout the housing and to heat-generating components of the housing, such as die 502. The channels may be routed in any manner around the heat-generating components to regulate temperature. Exemplary inlets 238b1 and 238b2 and outlets 238c1 and 238c2 to the one or more channels are shown in the side view of FIG. 5. In an exemplary embodiment inlet 238b1 and outlet 238c1 may provide a first channel throughout the housing and inlet 238b2 and outlet 238c2 may provide a second channel throughout the housing.

[0027] FIG. 6 shows a side view of an exemplary ceramic substrate 600 that may be cooled using the exemplary temperature control apparatus disclosed herein. The ceramic substrate 600 includes a multi-layer ceramic substrate 604 having internal electrical connections 609 running therethrough. Electrical components 602 are provided on an exterior surface of the substrate 604 and are electrical coupled to the internal electrical connections 609 via wire bonds 608. One or more channels are provided within the ceramic substrate 600 to provide circulation of a heat carrier throughout the substrate and to heat-generating components within the substrate. The channels may be routed in any manner around the heat-generating components to regulate temperature. Exemplary inlets 238b1 and 238b2 and outlets 238c1 and 238c2 to the one or more channels are shown in the side view of FIG. 6. In an exemplary embodiment inlet 238b1 and outlet 238c1 may provide a first channel throughout the substrate and inlet 238b2 and outlet 238c2 may provide a second channel throughout the substrate.

[0028] Although the disclosure includes a method and apparatus for regulating a temperature of a heat-generating device such as a multi-layer circuit board using for drilling purposes, the method and apparatus may also be used to regulate the temperature of devices used for other purposes such as monitoring purposes, activation purposes, and downhole

activities not directly related to drilling a wellbore. Such devices may include temperature sensors, pressure sensors, hydraulic valves and other electronic components. In an alternate embodiment, the temperature control apparatus may be used to provide heat to batteries that are designed for operation at high temperatures or in a specific temperature range. In yet another alternate embodiment, the temperature control apparatus may be used to melt salt, which may be used as a buffer for storing heat and work.

[0029] In another aspect, the temperature control apparatus may be operated to adjust or alter a temperature of the exemplary heat-generating device to operate at a desired temperature range, such as an optimal operation temperature, thereby avoiding temperature ranges in which the device works with low reliability. It is also noted that mechanical fatigue or the break down of components is often caused by temperature cycling or thermal-induced stresses. Shocks of extreme temperature changes of up to 200 K have been noted in geothermal applications, such as in the start of production of hot fluid, the start of pumping to drill, etc. Thus, in one aspect, the disclosed temperature control apparatus may be used to reduce mechanical fatigue and maintain a mechanical strength of a component by reducing the impact of thermal stresses on the component.

[0030] Thus, in one aspect, the disclosure provides an apparatus that includes a heat source or a device whose temperature is desired to be regulated, a channel associated with the heat source and a flow device or a flow unit configured to flow a carrier through the channel, which carrier absorbs heat from the heat source.

[0031] In another aspect, the apparatus further includes a medium associated with the carrier configured to absorb heat from the carrier. The medium may be any suitable medium that is configured to absorb heat from the heated carrier, including, but not limited to, a heat sink, a device in thermal communication with the carrier that is at a temperature below the temperature of the carrier, and a fluid (such a drilling fluid) in thermal communication with the carrier that is at a temperature below the temperature of the carrier. In yet another aspect, the disclosure provides an apparatus for use in a downhole tool, including a substrate; a heat source associated with the substrate, the heat source inducing heat into the substrate; a fluid channel in the substrate; and a fluid flow unit configured to flow a fluid through the fluid channel to regulate a temperature of the component. The fluid flow unit may include a pump configured to supply the fluid from a storage unit to the channel. A heat sink receives fluid from the substrate. The heat sink may include a thermally conductive element configured to conduct heat from the fluid received from the substrate to a fluid flowing through the tool when the tool is in the wellbore. The apparatus may further include a conduit system

configured to provide the fluid into the fluid channel and out of the fluid channel. The conduit system may provide an open loop path for the fluid or a closed loop path for the fluid. The heat source may be at least one of: (i) a component generating heat when the component is in operation; and (ii) an environment surrounding the substrate. A controller of the apparatus regulates the temperature of the component by controlling an operation of one at least one of: (i) a heat sink dissipating heat from the fluid, (ii) a heat sink dissipating heat into the fluid; and (iii) a pump circulating the fluid through the fluid channel. A sensor coupled to the substrate may provide a temperature measurement of the substrate to the controller to regulate the temperature of the component. A flow rate sensor configured measure a flow rate of the fluid through the fluid channel and provides the flow rate measurement to the controller to regulate the temperature of the component.

[0032] In another aspect, the present disclosure provides a method for regulating a temperature of a device in a tool in a wellbore, including providing the device having a substrate having a fluid channel therein in the wellbore; inducing heat from a heat source into the substrate; and flowing a fluid through the fluid channel to regulate the temperature of the device. The fluid may be provide to the substrate from a fluid storage unit and received from the substrate at a heat sink. In one embodiment, the heat sink comprises a thermally conductive element and the method further includes conducting heat from the fluid received from the substrate to a fluid flowing through the tool. A conduit system provides the fluid into the fluid channel and out of the fluid channel. The conduit system may provide one of: (i) an open loop path for the fluid; and (ii) a closed loop path for the fluid. In various embodiments, the heat source is at least one of: (i) a component associated with the substrate generating heat when the component is in operation; and (ii) an environment surrounding the substrate. The temperature of the component may be regulated by using a controller to control an operation of one at least one of: (i) a heat sink dissipating heat from the fluid, (ii) a heat sink dissipating heat into the fluid, and (iii) a pump circulating the fluid through the fluid channel. A temperature measurement of the substrate may be provided to the controller from a sensor coupled to the substrate to regulate the temperature of the component. Additionally, a flow rate of the fluid through the fluid channel may be provided to the controller to regulate the temperature of the component.

[0033] The embodiments described herein, therefore, are well adapted to carry out the invention. While various embodiments of the invention have been described for purposes of this disclosure, numerous changes known to persons of skill in the art may be made to practice the invention and to accomplish the results contemplated herein, without departing

from the concept or the spirit of the invention. Various modifications will be apparent to those skilled in the art. It is intended that all such variations that are within the scope of the appended claims be embraced by the foregoing disclosure.

CLAIMS

1. An apparatus for use in a downhole tool, comprising:

a substrate;

a heat source associated with the substrate, the heat source inducing heat into the substrate;

a fluid channel in the substrate; and

a fluid flow unit configured to flow a fluid through the fluid channel to regulate a temperature of the component.

2. The apparatus of claim 1, wherein the fluid flow unit comprises a pump configured to supply the fluid from a storage unit to the channel.

3. The apparatus of claim 1 further comprising a heat sink configured to receive fluid from the substrate.

4. The apparatus of claim 3, wherein the heat sink further comprises a thermally conductive element configured to conduct heat from the fluid received from the substrate to a fluid flowing through the tool when the tool is in the wellbore.

5. The apparatus of claim 1 further comprising a conduit system configured to provide the fluid into the fluid channel and out of the fluid channel.

6. The apparatus of claim 5, wherein the conduit system provides one of: (i) an open loop path for the fluid; and (ii) a closed loop path for the fluid.

7. The apparatus of claim 1, wherein the heat source is at least one of: (i) a component generating heat when the component is in operation; and (ii) an environment surrounding the substrate.

8. The apparatus of claim 1 further comprising a controller configured to regulate the temperature of the component by controlling an operation of one at least one of: (i) a heat sink dissipating heat from the fluid, (ii) a heat sink dissipating heat into the fluid; and (iii) a pump circulating the fluid through the fluid channel.

9. The apparatus of claim 8 further comprising a sensor coupled to the substrate configured to provide a temperature measurement of the substrate to the controller to regulate the temperature of the component.

10. The apparatus of claim 1, further comprising a sensor configured to measure a flow rate of the fluid through the fluid channel and provide the flow rate measurement to the controller to regulate the temperature of the component.

11. A method for regulating a temperature of a device in a tool in a wellbore, comprising:

providing the device having a substrate having a fluid channel therein in the wellbore;

inducing heat from a heat source into the substrate; and

flowing a fluid through the fluid channel to regulate the temperature of the device.

12. The method of claim 11 further comprising providing the fluid to the substrate from a fluid storage unit.

13. The method of claim 11 further comprising receiving the fluid from the substrate at a heat sink.

14. The method of claim 13, wherein the heat sink comprises a thermally conductive element and wherein the method further comprising conducting heat from the fluid received from the substrate to a fluid flowing through the tool.

15. The method of claim 11 further comprising using a conduit system to provide the fluid into the fluid channel and out of the fluid channel.

16. The method of claim 15, wherein the conduit system provides one of: (i) an open loop path for the fluid; and (ii) a closed loop path for the fluid.

17. The method of claim 11, wherein the heat source is at least one of: (i) a component associated with the substrate generating heat when the component is in operation; and (ii) an environment surrounding the substrate.

18. The method of claim 11 further comprising using a controller to regulate the temperature of the component by controlling an operation of one at least one of: (i) a heat sink dissipating heat from the fluid, (ii) a heat sink dissipating heat into the fluid, and (iii) a pump circulating the fluid through the fluid channel.

19. The method of claim 18 further comprising providing a temperature measurement of the substrate to the controller from a sensor coupled to the substrate to regulate the temperature of the component.

20. The method of claim 18, further comprising providing a measurement of flow rate of the fluid through the fluid channel the controller to regulate the temperature of the component.

21. An apparatus, comprising:

a heat source;

a channel associated with the heat source; and

a device configured to flow a carrier through the channel that absorbs heat from the heat source.

22. The apparatus of claim 21 further comprising a medium associated with the carrier configured to absorb heat from the carrier.

23. The apparatus of claim 22, wherein the medium is selected from a group consisting of: a heat sink; a device in thermal communication with the carrier that is at a temperature below the temperature of the carrier; a fluid in thermal communication with the carrier that is at a temperature below the temperature of the carrier.

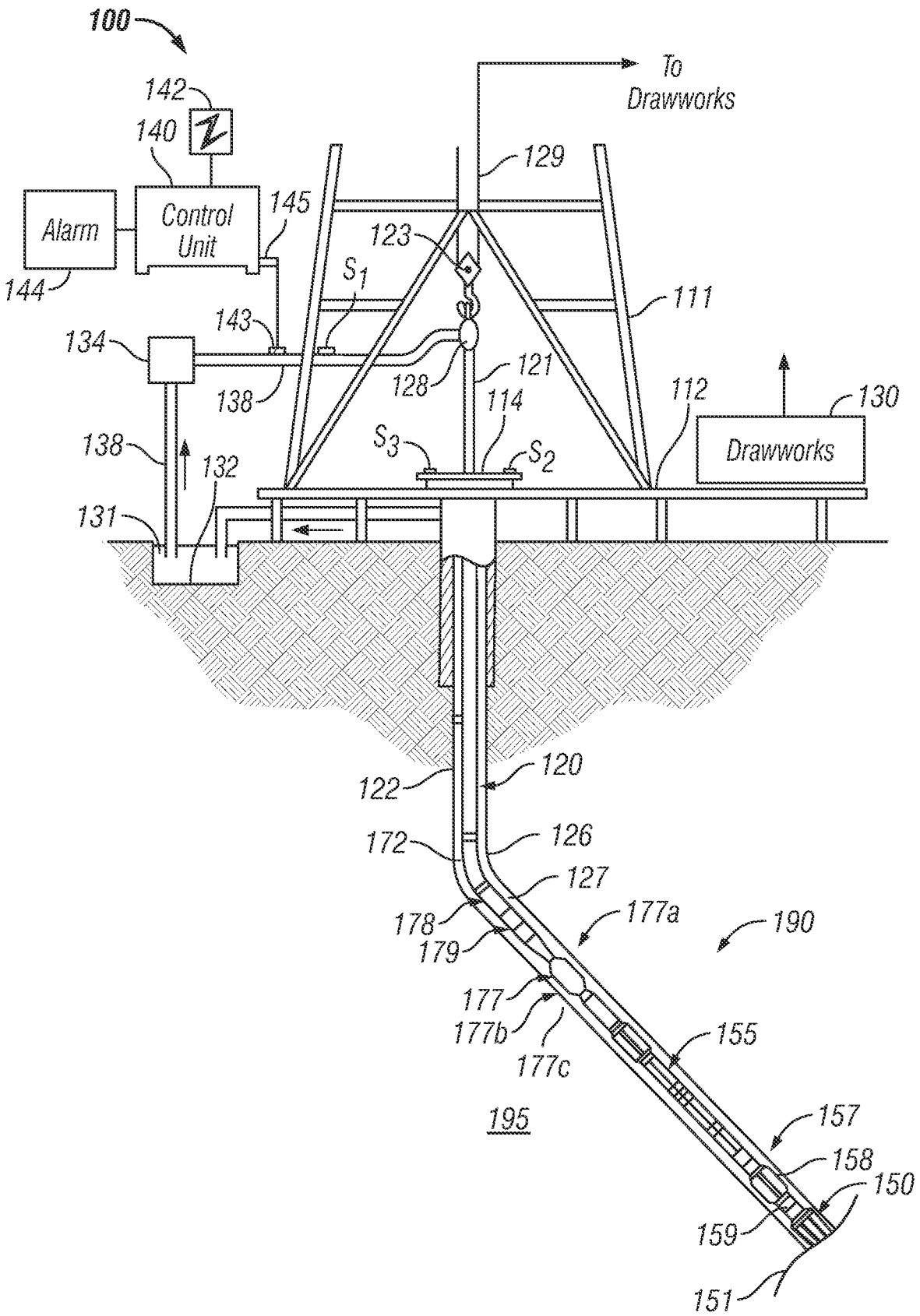
100
142
140
Alarm
Control Unit
145
144
143
134
138
131
132
123
S_1
129
To Drawworks
111
121
128
114
112
130
Drawworks
S_3
S_2
120
122
172
126
127
178
179
177a
190
177
177b
177c
155
195
157
158
150
159
151

FIG. 1

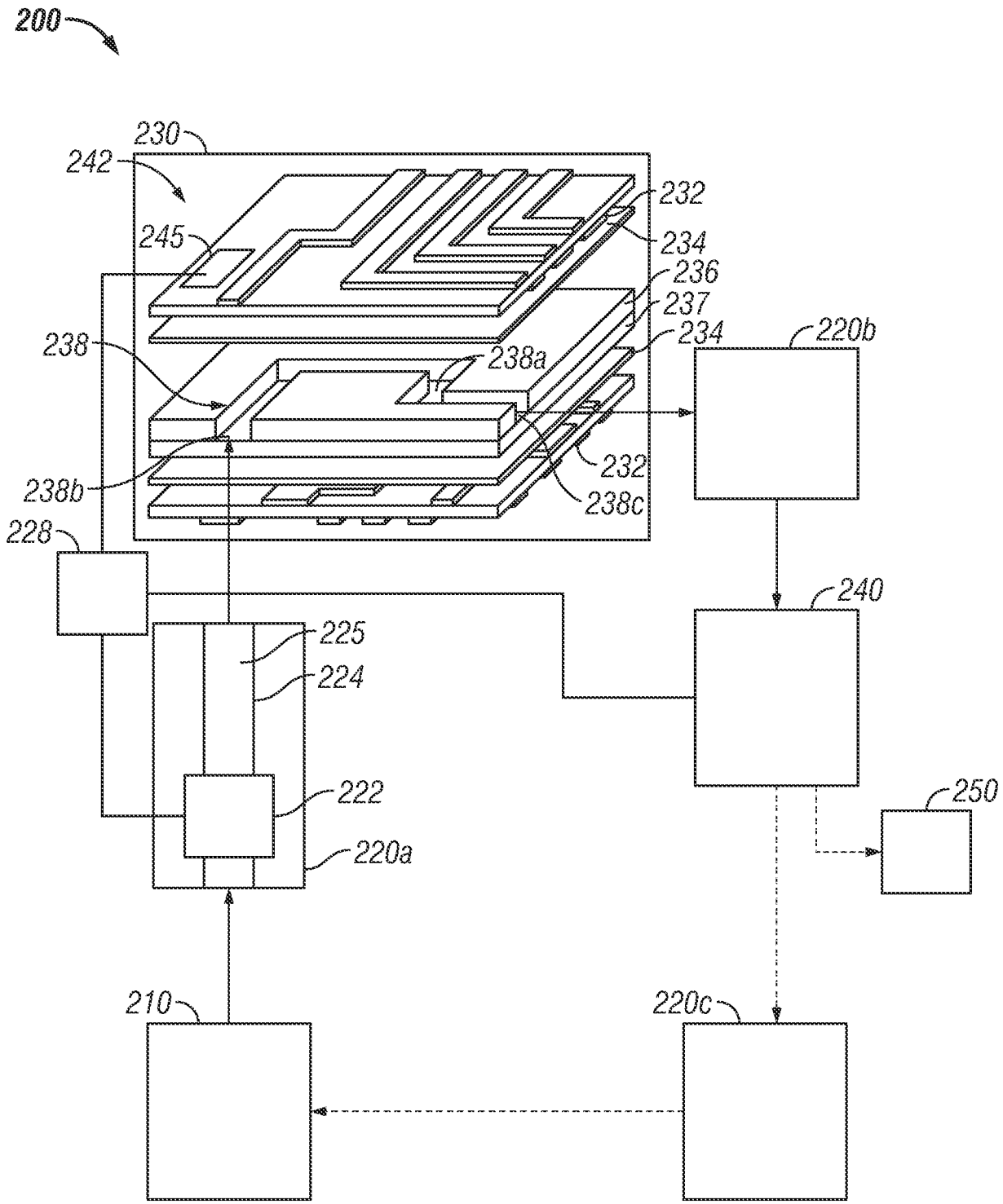
200
230
242
245
232
234
236
237
238
238a
234
220b
232
238b
238c
228
240
225
224
222
250
220a
210
220c

FIG. 2

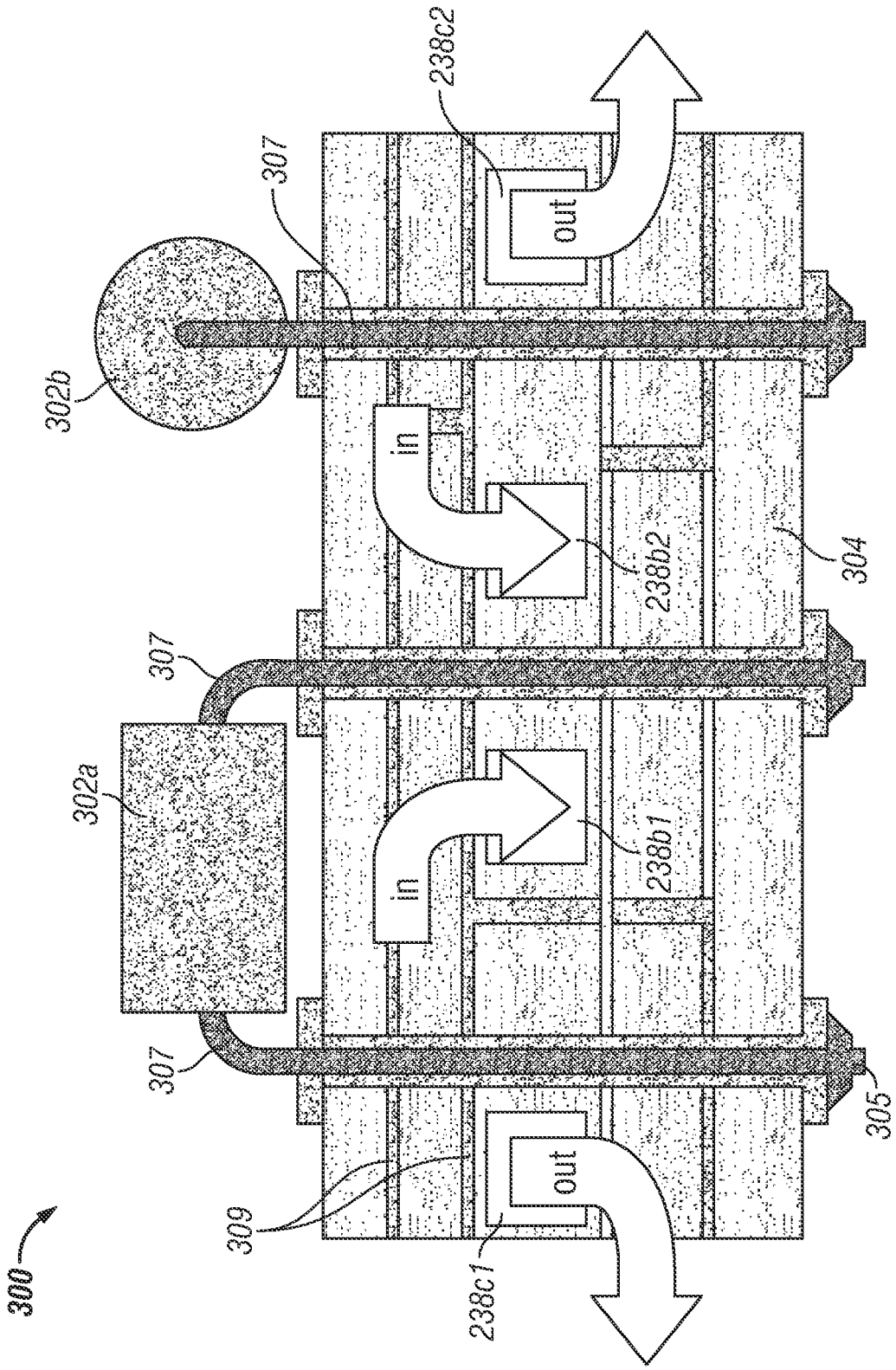
300
309
238c1
out
305
307
302a
307
in
238b1
238b2
304
307
302b
in
out
238c2

FIG. 3

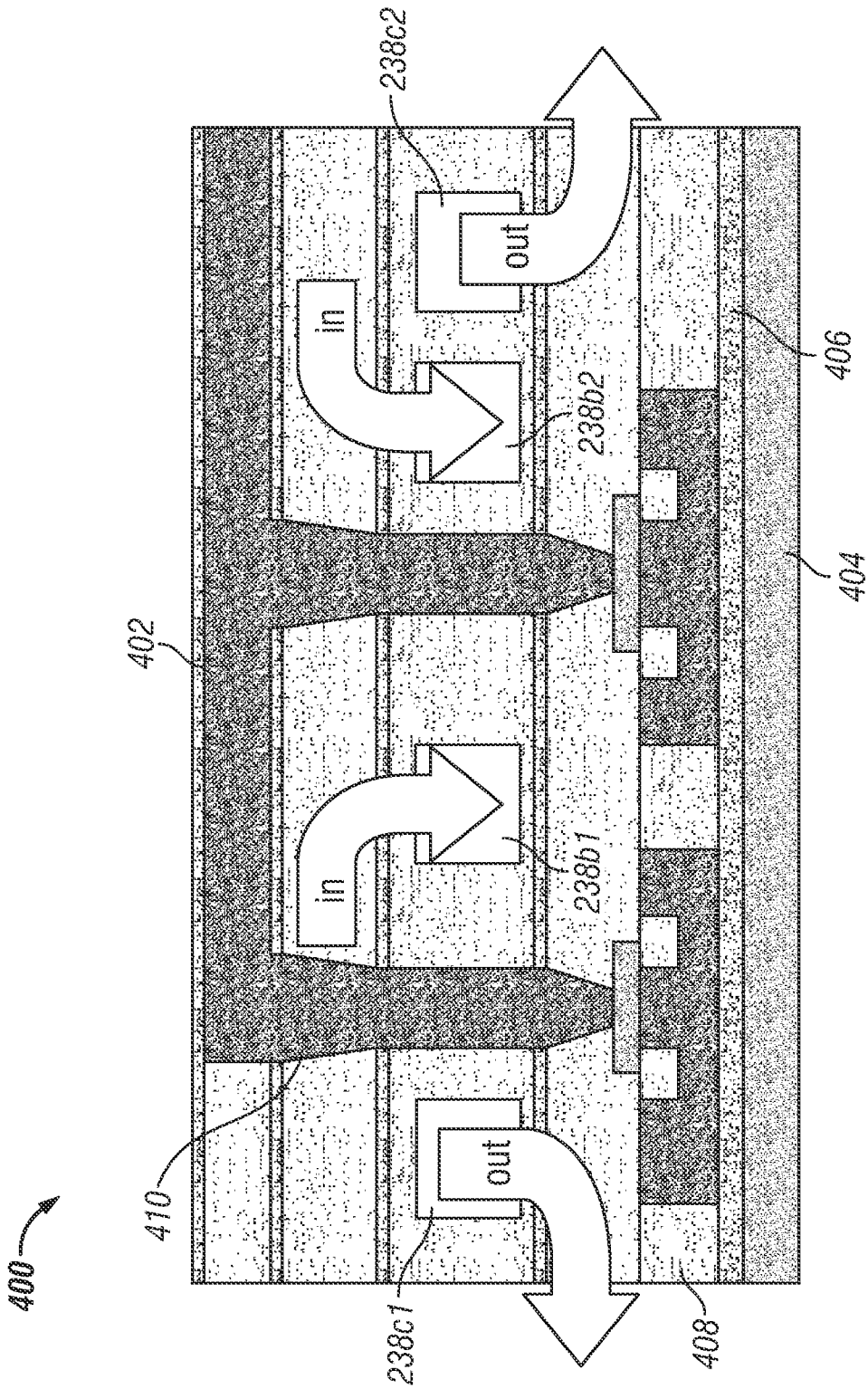

FIG. 4

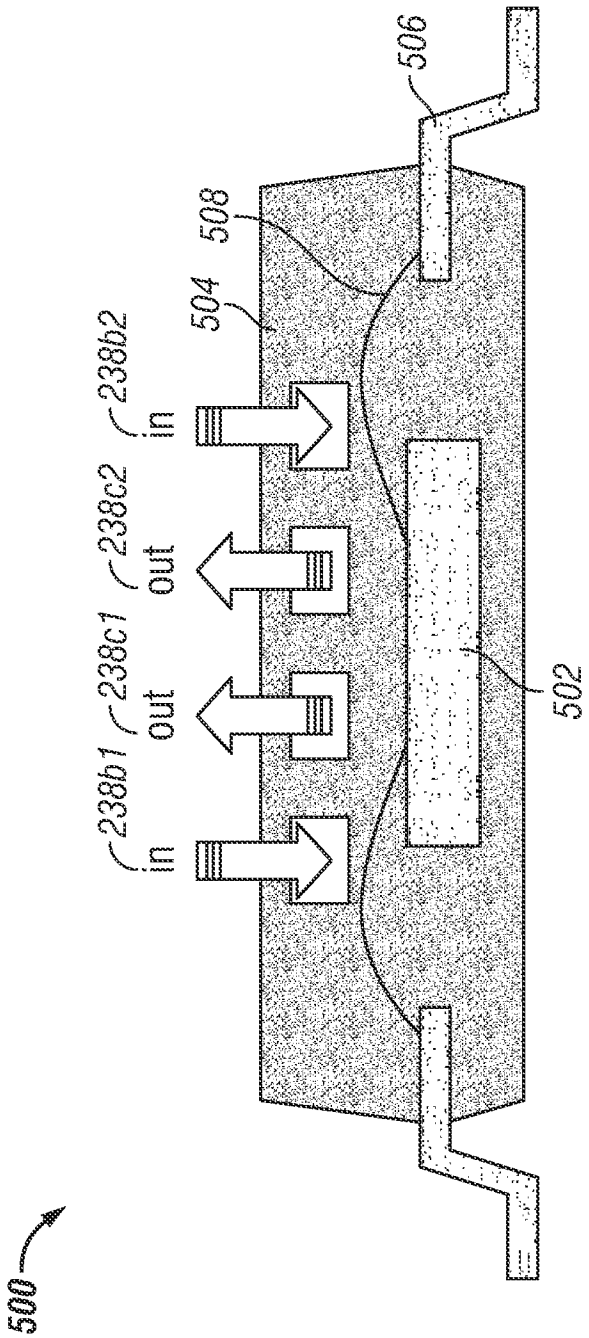

FIG. 5

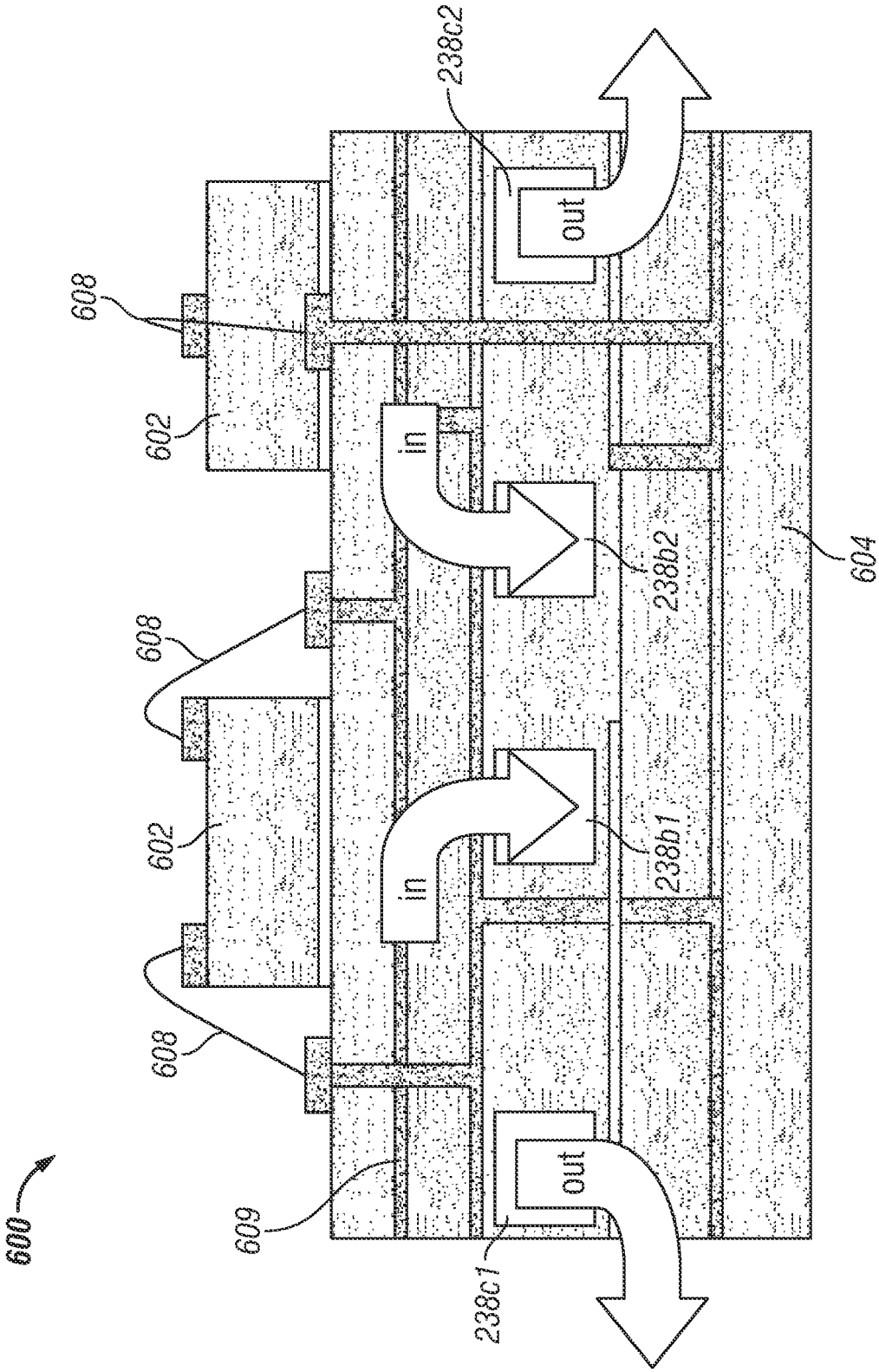
600
608
602
608
602
608
609
238c1
238c2
238b1
238b2
604
in
in
out
out

FIG. 6