P. LEKAM.

OYSTER OPENER.

APPLICATION FILED JUNE 4, 1909.

930,771.

Patented Aug. 10, 1909.

3 SHEETS—SHEET 1.

FIG. 1

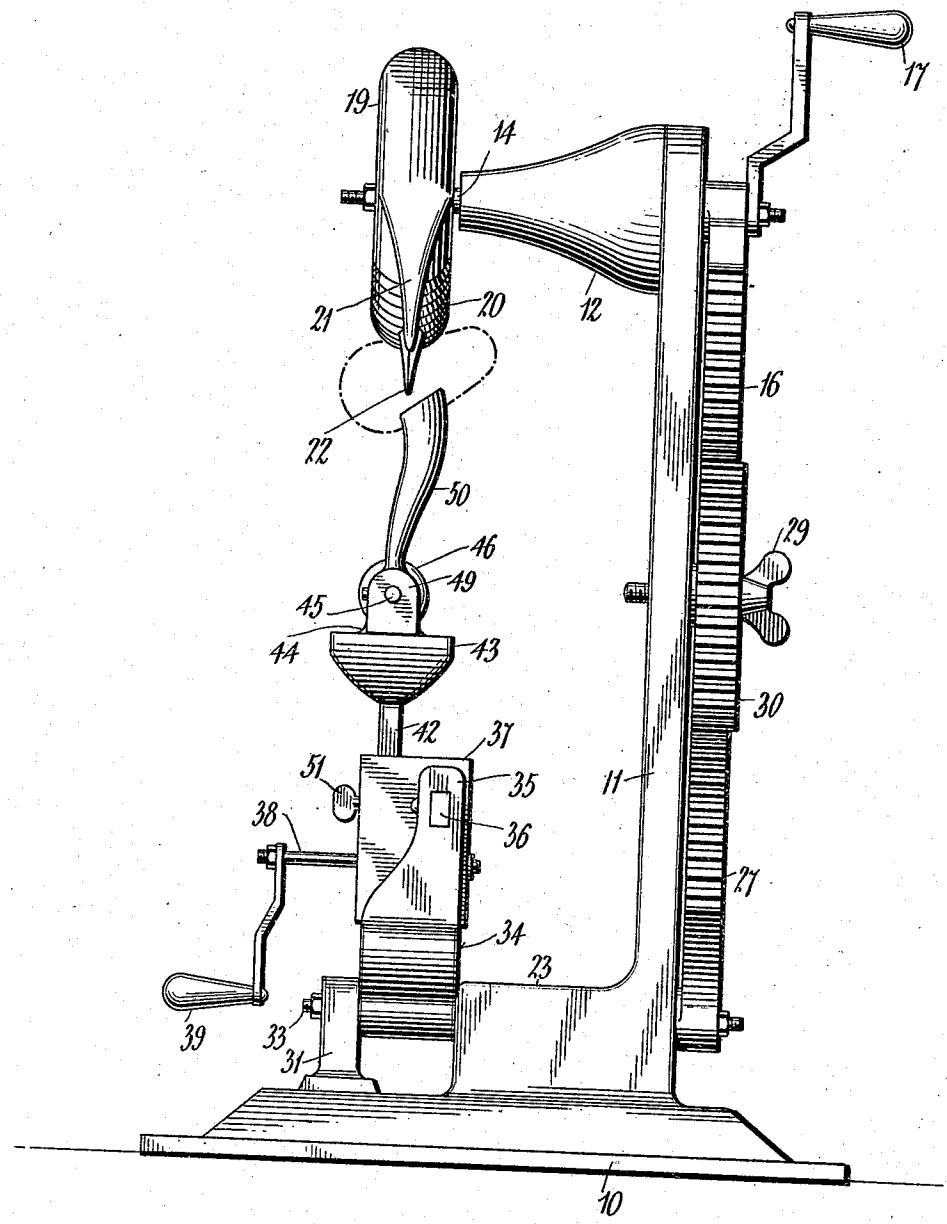

Witnesses

[illegible]

[illegible]

Inventor

Philip Lekam

By [illegible]

Attorneys

ANDREW. B. GRAHAM CO., PHOTO-LITHOGRAPHERS, WASHINGTON, D. C.

P. LEKAM.

OYSTER OPENER.

APPLICATION FILED JUNE 4, 1909.

930,771.

Patented Aug. 10, 1909.

3 SHEETS—SHEET 2.

FIG. 2

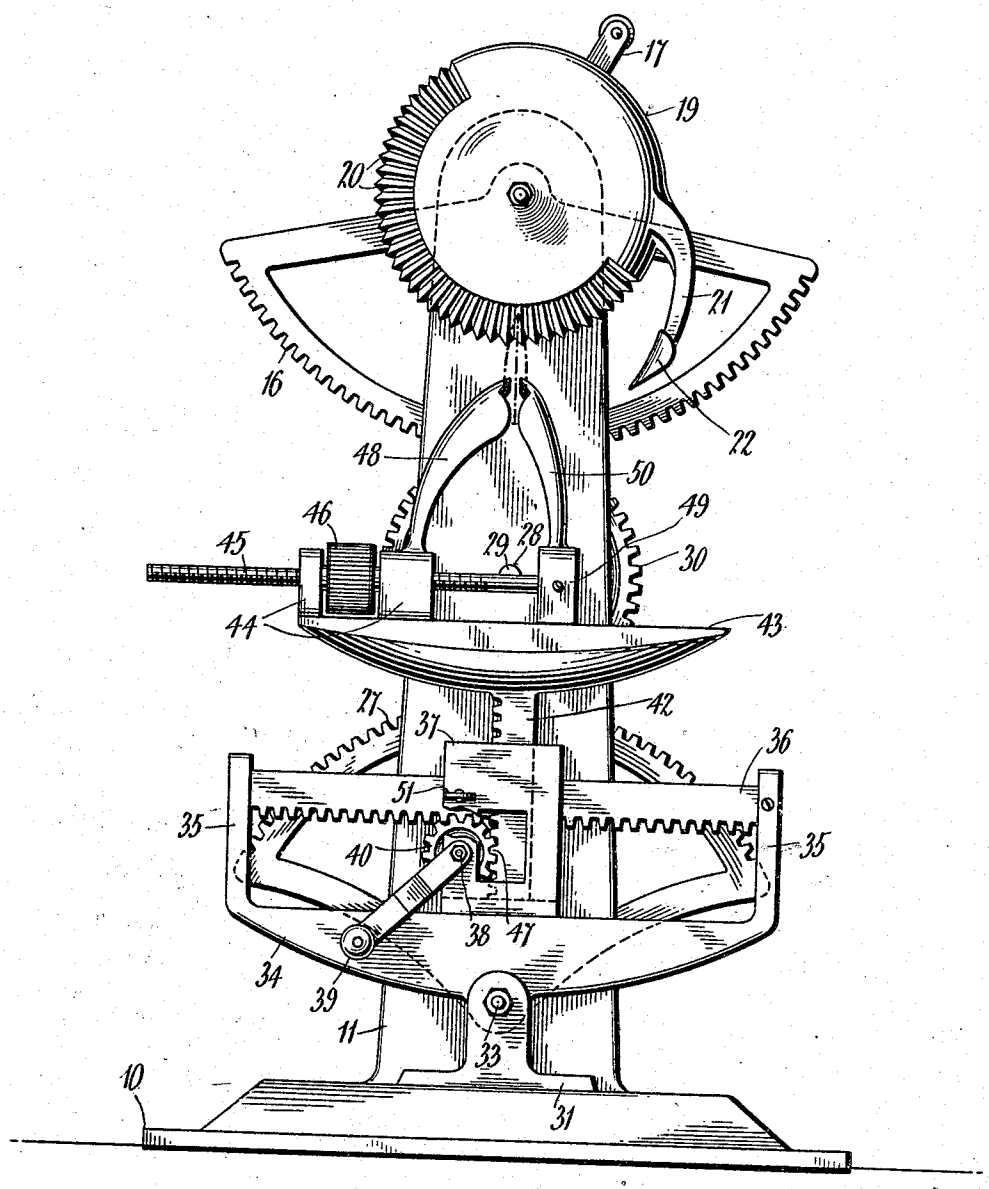

Witnesses

Inventor

Philip Lekam

By

Attorneys

ANDREW. B. GRAHAM CO., PHOTO-LITHOGRAPHERS, WASHINGTON, D. C.

P. LEKAM.

OYSTER OPENER.

APPLICATION FILED JUNE 4, 1909.

930,771.

Patented Aug. 10, 1909.

3 SHEETS—SHEET 3.

FIG. 3

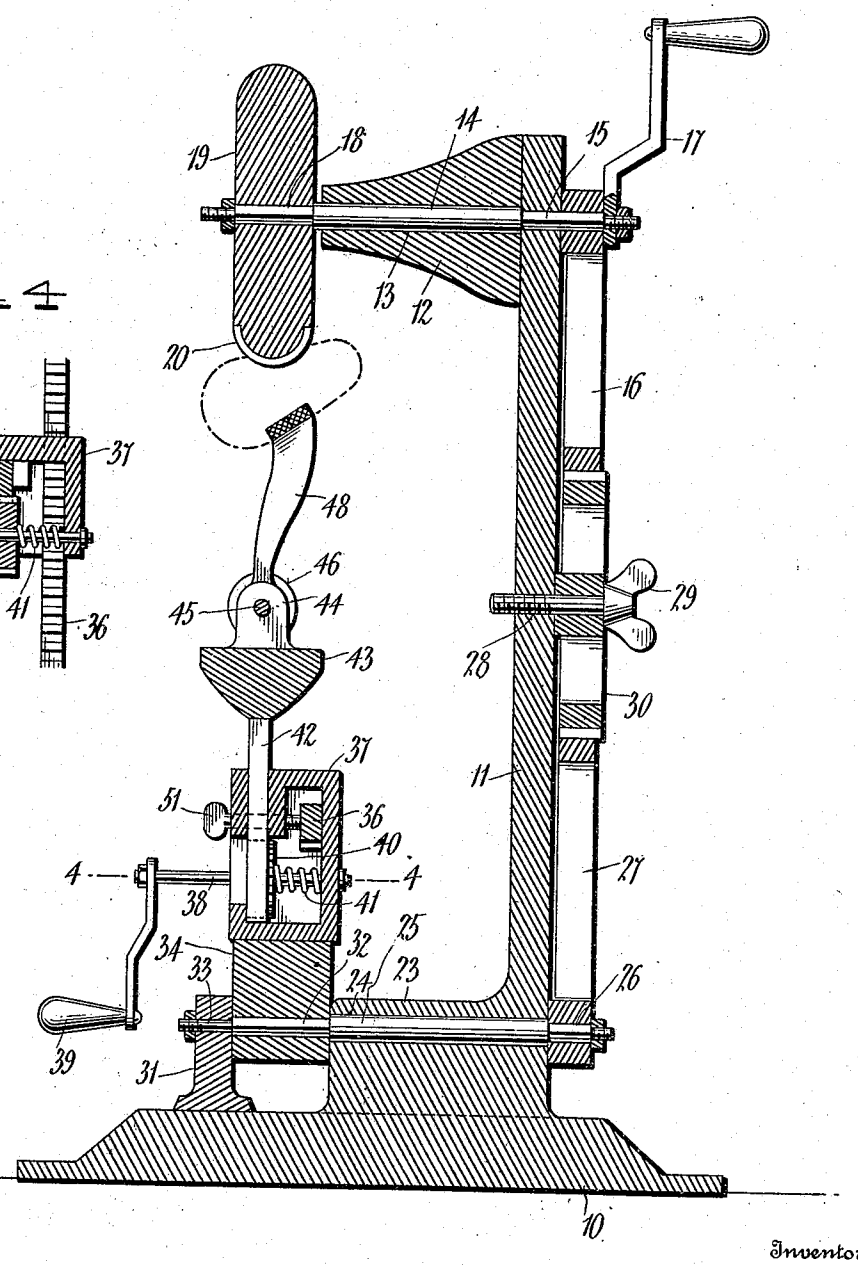

FIG. 4

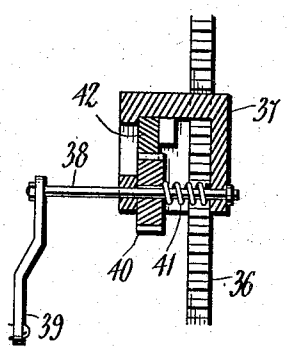

Witnesses

J. L. Jenkins

V. M. Gillis

Inventor

Philip Lekam

By Chandler & Chandler

Attorneys

ANDREW. B. GRAHAM CO., PHOTO-LITHOGRAPHERS, WASHINGTON, D. C.

UNITED STATES PATENT OFFICE.

PHILIP LEKAM, OF FLANAGIN TOWN, TRINIDAD, BRITISH WEST INDIES.

OYSTER-OPENER.

No. 930,771. Specification of Letters Patent. Patented Aug. 10, 1909.

Application filed June 4, 1909. Serial No. 500,135.

To all whom it may concern:

Be it known that I, PHILIP LEKAM, a subject of the King of England, residing at Flanagin Town, in the Island of Trinidad, British West Indies, have invented certain new and useful Improvements in Oyster-Openers; and I do hereby declare the following to be a full, clear, and exact description of the invention, such as will enable others skilled in the art to which it appertains to make and use the same.

This invention relates to mechanism for removing the shells from bivalves and is preferably termed an oyster opener.

One object of the invention is to improve the general construction of devices of this character so that oysters and other shell fish of like kind may be readily opened.

Another object of the invention is to provide a mechanism of this description with means whereby the edge of the shell may be rasped prior to the introduction of the opening implement.

A third object of the invention is to provide a novel form of holding clamp together with improved means for adjusting the same in order to secure the oyster in position to be operated upon.

With the above and other objects in view the invention consists in general of an improved mechanism including a rasp, an opener and an improved form of device and adjusting means therefor.

The invention further consists in certain novel details of construction and combinations of parts hereinafter fully described, illustrated in the accompanying drawings, and specifically set forth in the claims.

In the accompanying drawings, like characters of reference indicate like parts in the several views, and:—Figure 1 is a side elevation of an oyster opener constructed in accordance with this invention. Fig. 2 is a front elevation thereof. Fig. 3 is a side elevation partly in section of such device. Fig. 4 is a section on the line 4—4 of Fig. 3.

The numeral 10 indicates the base of this device and on this base is mounted a standard 11 which is provided at its upper end with a forwardly directed extension 12 having a bearing 13 formed therethrough for the reception of a shaft 14 and this bearing is reduced where it extends through the standard 11 so that the reduced portion 15 of said shaft may pass therethrough and be prevented from longitudinal movement in one direction by means of the standard between the reduced portion and the top of the shaft. Upon the reduced portion 15 and to the rear of the standard 11 is fixed a segmental gear 16 and to the rear of this segmental gear a crank 17 is also fixed upon this shaft so that as the crank is turned the shaft is rotated. The opposite or forward end of this shaft 13 is provided with a reduced portion 18 whereon is fixedly mounted a disk 19 provided around a portion of its periphery with serrations 20 and this disk is preferably in the form of a torus. Projecting from the disk 20 is a curved arm 21 and upon the end of this arm is formed a cordate point 22.

The standard 11 has a broadened foot as indicated at 23 and through this broadened foot extends an opening 24 wherein is held a shaft 25 having a reduced end 26 whereon is mounted a segmental gear 27. The standard 11 is further provided with a threaded aperture 28 and through this threaded aperture extends a thumb screw 29 provided with a central portion whereon is mounted a gear 30 which ordinarily meshes with the gears 16 and 27. By means of this arrangement of gearing the thumb screw 29 may be rotated to permit the gear 30 being slid out of engagement with the gears 16 and 27 so that the relative positions of these gears may be adjusted as occasion requires and when the gear 30 is again slid into mesh the rotation of the crank 17 will cause the shafts 25 and 14 to simultaneously rotate in the same direction and in a predetermined relation.

Upon the base 10 is formed a bearing 31 and the shaft 25 has a reduced portion 32 which extends from the foot 23 to the bearing 31 where the shaft is again reduced as at 33 and is received in this bearing 31. Between the bearing 31 and the foot 23 there is mounted upon the shaft 32 a yoke 34 provided with upstanding arms 35 between which extends a rack bar 36. Slidably mounted upon the rack bar 36 is a sleeve 37 and rotatably and slidably supported in this sleeve is a shaft 38 provided with a crank 39. Secured upon the shaft 38 is a gear 40 adapted to mesh with the rack 36 and surrounding the shaft 38 is a spring 41 which ordinarily holds said gear out of mesh with the gear 36. Slidably mounted in the sleeve 37 is the stem

42 of a vise base 43 provided with a pair of spaced upstanding bearings 44 through which extends a screw 45 and between these bearings there is mounted on this screw a nut 46 the rotation of which causes the screw to move longitudinally through the bearings. The stem 42 is provided on one of its bases with a rack 47 which ordinarily meshes with the gear 40. Mounted upon one of the members 44 is a vise member 48 which extends upwardly and terminates in a bulbous jaw provided with a pair of spaced cusps and this jaw with the cusps has a serrated face. Fixed upon the screw 45 is a block 49 which is arranged to slide over the surface of the member 43 and upon this block is mounted a vise jaw 50 of the same construction and arrangement as the vise jaw 48.

In the operation of this device the oyster is grasped between the two jaws 48 and 50 and the crank 39 pushed in against the action of the spring 41 so that the coil 40 is brought into mesh with the rack 46 until the oyster is in the proper position beneath the disk 19 when the crank is released and the sleeve 37 locked in position by means of a thumb screw 51 which projects through the sleeve and bears against the rack bar 36. When the crank has been released so that the gear 40 meshes with the rack 47 the crank is again rotated until the oyster is pressed against the serrated surface of the disk 19 when the crank 17 is rotated. The rotation of this crank 17 sweeps the oyster across the moving serrated disk and brings it into position so that the point 22 can enter between the shells and force them apart. This is accomplished by reason of the fact that as the crank 17 is moved the entire vise swings around with the shaft 25 to bring the other edge of the oyster in the path of the point 22. The opening operation may, if desired, be assisted by the crank 39 being rotated to move the vise up. In order to permit the effective operation of the point 22 the vise members 48 and 50 have their shanks reduced so that they are capable of a certain amount of resiliency without destroying their holding qualities.

There has thus been provided a simple and efficient device of the kind described and for the purpose specified.

Having thus described the invention, what is claimed as new, is:—

1. In a device of the kind described, a swinging vise, a swinging opener, and means to cause said vise and opener to move synchronously.

2. In a device of the kind described, a swinging vise, mechanism to move said vise in coördinate directions, a swinging opener, and means to cause said vise and opener to move synchronously.

3. In a device of the kind described, a swinging vise, a swinging opener including a rasp and an opening point, and means to cause said vise and opener to move synchronously.

4. In a device of the kind described, a swinging vise, mechanism to move said vise in coördinate directions, a swinging opener including a rasp and a point, and means to cause said vise and opener to move synchronously.

5. In a device of the kind described, a swinging vise, a swinging opener, and means to cause said vise and opener to move synchronously including a shaft carrying said opener, a second shaft carrying said vise, gears on the first and second shaft, an idler gear meshing with said gears and a crank on one of said shafts to rotate the same.

6. In a device of the kind described, a swinging vise, mechanism to move said vise in coördinate directions, a swinging opener, and means to cause said vise and opener to move synchronously including a shaft carrying said opener, a second shaft carrying said vise, gears on the first and second shaft, an idler gear meshing with said gears and a crank on one of said shafts to rotate the same.

7. In a device of the kind described, a swinging vise, a swinging opener including a rasp and an opening point and means to cause said vise and opener to move synchronously including a shaft carrying said opener, a second shaft carrying said vise, gears on the first and second shaft, an idler gear meshing with said gears and a crank on one of said shafts to rotate the same.

8. In a device of the kind described, a swinging vise, mechanism to move said vise in coördinate directions, a swinging opener including a rasp and a point, and means to cause said vise and opener to move synchronously including a shaft carrying said opener, a second shaft carrying said vise, gears on the first and second shaft, an idler gear meshing with said gears and a crank on one of said shafts to rotate the same.

9. In a device of the kind described, a swinging vise, mechanism to move said vise in coördinate directions, said mechanism including a pivotally mounted yoke provided with spaced arms, a rack held between said arms, a sleeve slidable on said rack, a stem formed on the vise projecting through the sleeve, a rack formed on said stem, a shaft passing through said sleeve and rotatable and slidable therein, a crank on said shaft, a gear fixed on said shaft and adapted to mesh with either of said racks as the shaft is slid in the sleeve and a spring normally holding the gear in mesh with the rack of the stem; a swinging opener, and means to cause said vise and opener to move synchronously.

10. In a device of the kind described, a swinging vise, mechanism to move said vise in coördinate directions, said mechanism in-

cluding a pivotally mounted yoke provided with spaced arms, a rack held between said arms, a sleeve slidable on said rack, a stem formed on the vise projecting through the sleeve, a rack formed on said stem, a shaft passing through said sleeve and rotatable and slidable therein, a crank on said shaft, a gear fixed on said shaft and adapted to mesh with either of said racks as the shaft is slid in the sleeve and a spring normally holding the gear in mesh with the rack of the stem; a swinging opener including a rasp and a point, and means to cause said vise and opener to move synchronously.

11. In a device of the kind described, a swinging vise, mechanism to move said vise in coördinate directions, said mechanism including a pivotally mounted yoke provided with spaced arms, a rack held between said arms, a sleeve slidable on said rack, a stem formed on the vise projecting through the sleeve, a rack formed on said stem, a shaft passing through said sleeve and rotatable and slidable therein, a crank on said shaft, a gear fixed on said shaft and adapted to mesh with either of said racks as the shaft is slid in the sleeve and a spring normally holding the gear in mesh with the rack of the stem; a swinging opener, and means to cause said vise and opener to move synchronously including a shaft carrying said opener, a second shaft, an idler gear meshing with said gears and a crank on one of said shafts to rotate the same.

12. In a device of the kind described, a swinging vise, mechanism to move said vise in coördinate directions, said mechanism including a pivotally mounted yoke provided with spaced arms, a rack held between said arms, a sleeve slidable on said rack, a stem formed on the vise projecting through the sleeve, a rack formed on said stem, a shaft passing through said sleeve and rotatable and slidable therein, a crank on said shaft, a gear fixed on said shaft and adapted to mesh with either of said racks as the shaft is slid in the sleeve and a spring normally holding the gear in mesh with the rack of the stem; a swinging opener including a rasp and a point, and means to cause said vise and opener to move synchronously including a shaft carrying said opener, a second shaft carrying said vise, gears on the first and second shaft, an idler gear meshing with said gears and a crank on one of said shafts to rotate the same.

In testimony whereof, I affix my signature, in presence of two witnesses.

PHILIP LEKAM.

Witnesses:
CHAS. A. DIAZ,
S. WESTMORE JAMES.