Oct. 19, 1971 D. W. GLASS ET AL 3,613,413

COMBINATION LATCH AND LOCKING MECHANISM

Filed Dec. 4, 1969 2 Sheets-Sheet 1

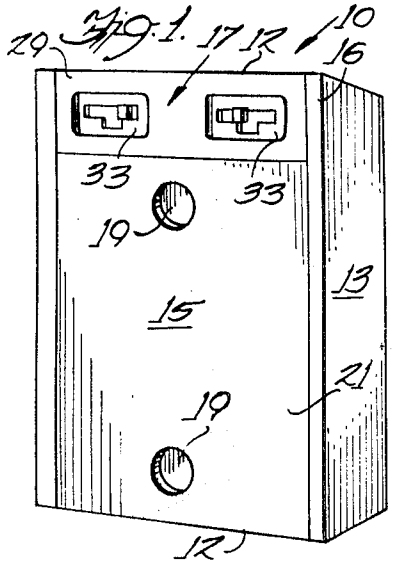

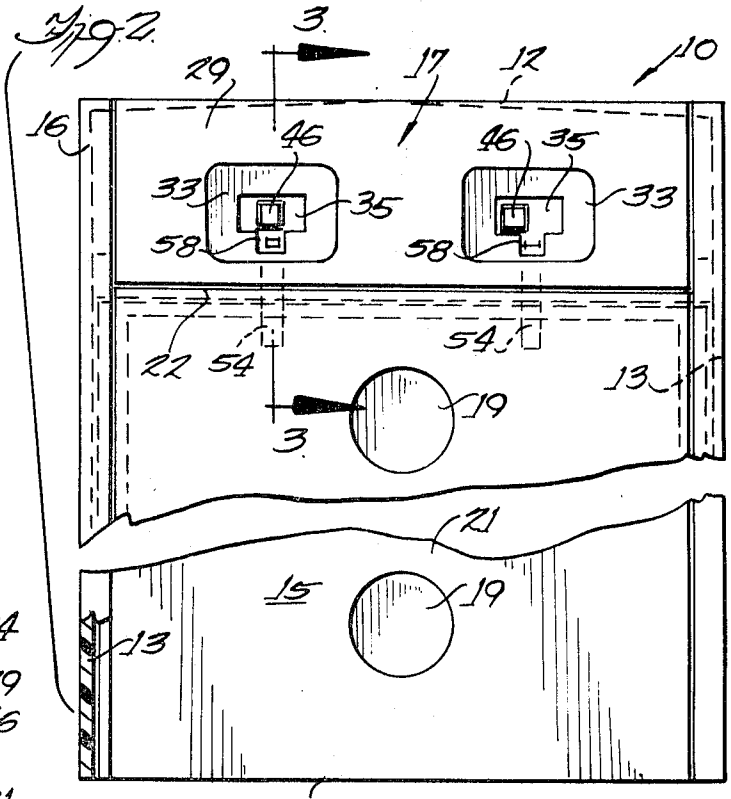

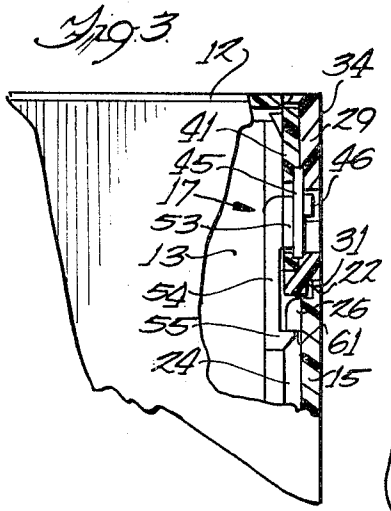

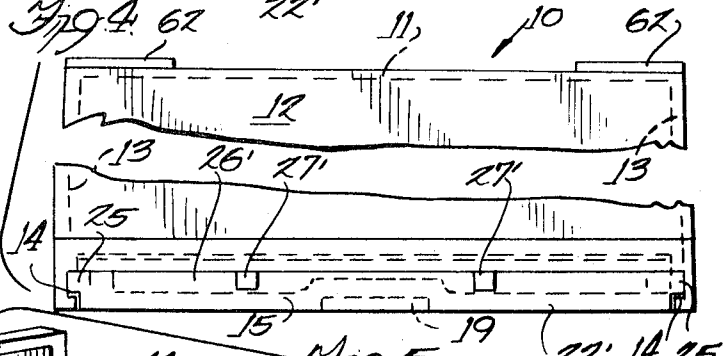

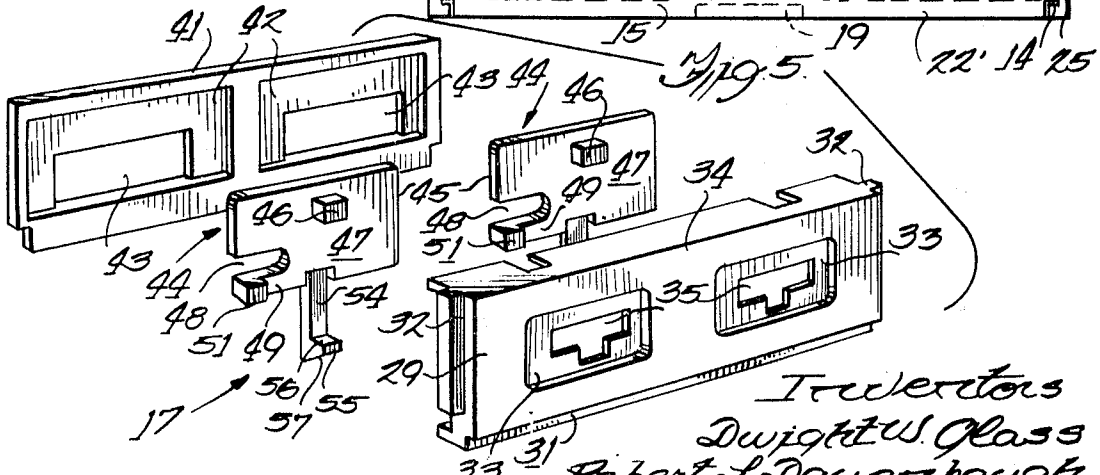

Inventors
Dwight W. Glass
Robert L. Dauerbaugh
by: Wilson & Geppert
Attys

Oct. 19, 1971 D. W. GLASS ET AL 3,613,413

COMBINATION LATCH AND LOCKING MECHANISM

Filed Dec. 4, 1969 2 Sheets-Sheet 2

Fig. 6.

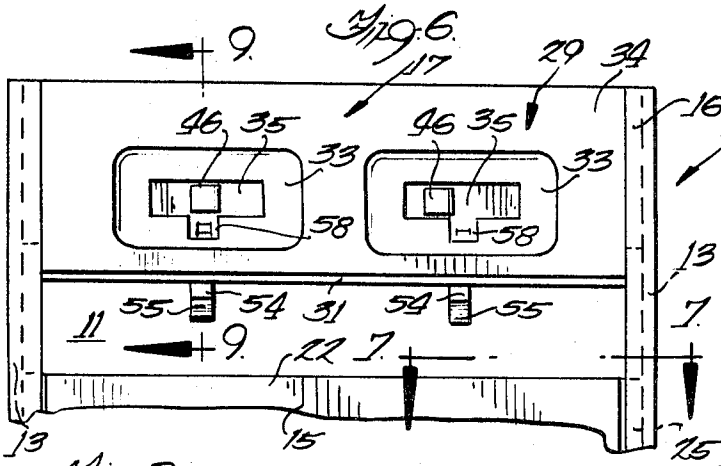

Fig. 7.

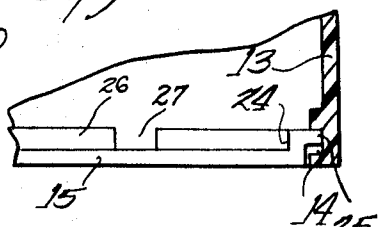

Fig. 8.

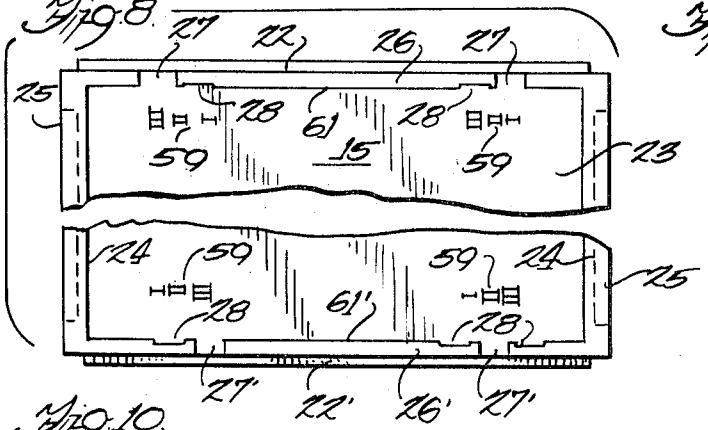

Fig. 9.

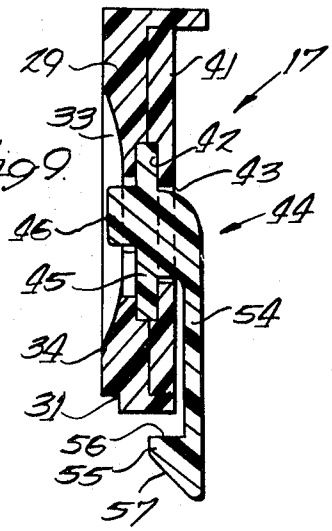

Fig. 10.

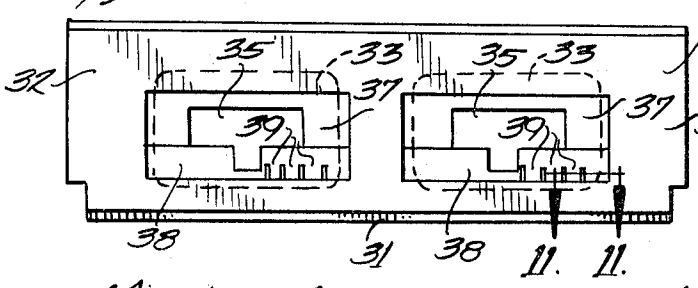

Fig. 11.

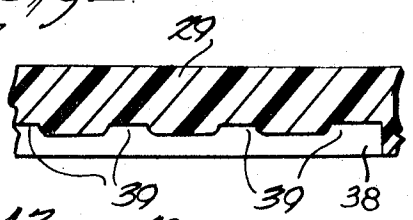

Fig. 12.

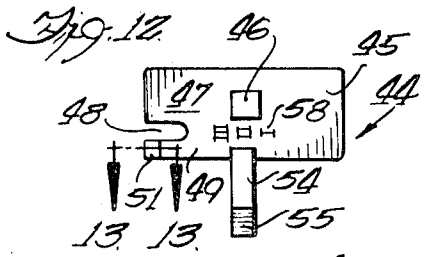

Fig. 13.

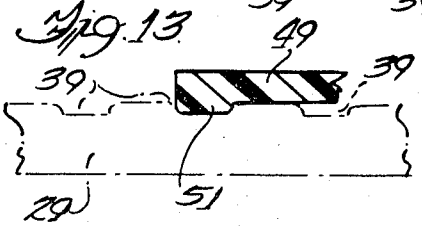

Fig. 14.

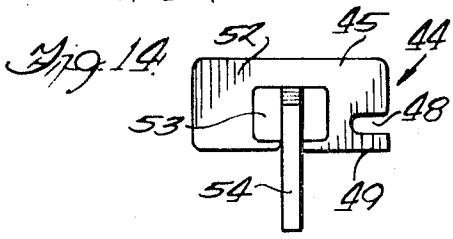

Inventors
Dwight W. Glass
Robert L. Dauerbaugh
by Wilson & Geppert
Atty's

United States Patent Office 3,613,413 Patented Oct. 19, 1971

3,613,413

COMBINATION LATCH AND LOCKING MECHANISM

Dwight W. Glass and Robert L. Dauenbaugh, Rockford, Ill., assignors to Keystone Consolidated Industries, Inc., Peoria, Ill.

Filed Dec. 4, 1969, Ser. No. 882,027
Int. Cl. E05b 32/00, 65/52
U.S. Cl. 70—298 9 Claims

ABSTRACT OF THE DISCLOSURE

A combination latch and lockin mechanism for small containers having a slidable door or cover forming one side of the container, including two or more slidable latching buttons, each button having several predetermined positions and provided with a locking finger depending beyond the mechanism to engage a rib formed on the underside of the slidable cover. The rib has a gate positioned for each button to allow passage of the finger and movement of the cover when the buttons have been shifted to their unlocked positions.

The present invention relates to a locking mechanism for a slidable door or cover of a container, and more particularly to a combination latch and locking mechanism utilized in a small container having a slidable door or cover forming one wall of the container.

At the present time, emphasis has been heavily placed on safety features for containers, such as "child-proof" latches for medicine cabinets to prevent small children from obtaining access to potentially harmful or dangerous drugs or compounds stored therein. Safety latching and/or locking mechanisms are also of interest in portable containers to prevent accidental or unauthorized access thereto. The present invention provides a safety latch integral with and used to latch the slidable cover of a small portable container.

Among the objects of the present invention is the provision of a combination latch and locking mechanism for a small container which provdes a safety laitch therefor. The container and the latch and locking mechanism are formed of suitable plastic materials with the container formed of a back, opposed sides ad opposed ends; the sides having slideways for a slidable cover or door forming the front wall of the container. The latch and locking mechanism is located at one end of the open front of the container to cooperate with the abutting edge of the sliding cover.

Another object of the present invention is the provision of a combination latch and locking mechanism for a container with a sliding cover or door where the mechanism provides two or more combination buttons, each of which is slidable between several positions to provide various locking combinations. Each button includes a projecting locking finger which cooperates with a gate formed in a rib on the interior surface of the slidable cover to release the cover for opening movement.

A further object of the present invention is the provision of a combination latch and locking mechanism where different combinations can be achieved for a particular sliding cover. The cover has a transverse rib formed on the underside of the cover at each end thereof with the gates in the ribs arranged to provide a different button combination for each end. Thus, turning the cover end for end provides a different effective combination of the slidable buttons.

Further objects are to provide a construction of maximum simplicity, efficiency, economy and ease of assembly and operation, and such further objects, advantages

and capabilities as will later more fully apepar and are inherently possessed thereby.

In the drawings:

FIG. 1 is a perspective view of a small container having a slidable cover and the combination latch and locking mechanism of the present invention.

FIG. 2 is an enlarged front elevational view of the container and the latch and locking mechanism.

FIG. 3 is a vertical cross sectional view taken on the line 3—3 of FIG. 2 but with the slide button shown in side elevation.

FIG. 4 is a fragmentary end elevational view of the container.

FIG. 5 is an exploded perspective view of the combination latch and locking mechanism components for the container.

FIG. 6 is a partial front elevational view of the container and mechanism with the cover partially open.

FIG. 7 is a horizontal cross sectional view taken on the line 7—7 of FIG. 6.

FIG. 8 is an elevational view of the interior surface of the sliding cover.

FIG. 9 is an enlarged vertical cross sectional view of the latch and locking mechanism taken on the line 9—9 of FIG. 6.

FIG. 10 is a rear elevational view of the top plate of the latch and locking mechanism.

FIG. 11 is an enlarged horizontal cross sectional view taken on the line 11—11 of FIG. 10.

FIG. 12 is a front elevational view of a combination slide button.

FIG. 13 is a partial enlarged horizontal cross sectional view taken on the line 13—13 of FIG. 12.

FIG. 14 is a rear elevational view of a slide button.

Referring more particularly to the disclosure in the drawings wherein is shown an illustrative embodiment of the present invention, FIG. 1 discloses as mall portable container **10** formed of a suitable plastic material, such as high impact polystyrene, and having a rear wall **11**, end walls **12**, **12** and slide walls **13**, **13**. As seen in FIG. 4, the upper edges of the side walls **13**, **13** are undercut to form inwardly facing grooves or tracks **14**, **14** to slidably receive a cover or door **15**. The cover **15** has a length less than the length of the container **10** to provide a space at one end **16** to receive a combination latch and locking mechanism **17** for the cover.

The cover **15** is generally rectangular and has a pair of finger engaging depressions **19** on the exterior surface **21**, one depression located adjacent each end **22** and **22'**, and the interior surface **23**, as shown in FIG. 8, has inwardly extending parallel side ribs **24**, **24** forming outwardly extending slides **25**, **25** adapted to be received in the tracks **14**, **14** in the container **10**, and a pair of parallel transverse ribs **26**, **26'** spaced slightly inwardly from the ends **22**, **22'** of the cover. Each rib **26** and **26'** has a pair of gates **27**, **27** and **27'**, **27'** providing a combination to unlock the cover as will be later described. Also, each rib has one or more false or dummy gates **28** provided on one or each side of the gates **27** and **27'**.

The combination latch and locking mechanism **17**, as clearly seen in FIGS. 3, 5 and 9, includes a top plate **29** of a generally rectangular shape having a recessed lower edge **31** to receive the end **22** or **22'** of the slidable cover **15**, and parallel side ribs **32**, **32** to be received in extensions of the tracks **14**, **14**. The plate **29** has a pair of spaced generally horizontally disposed recesses **33**, **33** in the exterior surface **34**, each recess having a T-shaped opening **35** therein. In the interior surface are provided a pair of rectangular stepped recesses **37**, **37** (see FIG. 10), the lower raised surface **38** of the recess being horizontally aligned with the depending stem of the T-shaped opening

and formed with a series of depressions 39 at one side of the stem of opening 35, as more clearly seen in FIG. 11, for a purpose to be later described. The recesses 37, 37 are generally aligned with the exterior recesses 33, 33.

A rear plate 41 is sandwiched to the plate 29 in the modified groove extensions and these pieces are cemented or otherwise secured in place. These plates 29 and 41 are also preferably formed of a suitable plastic, such as high impact polystyrene. The rear plate 41 includes a pair of spaced recesses 42, 42 having elongated horizontally disposed openings 43, 43 therein positioned centrally of and at the bottom edge of the recesses.

A combination slide button 44, also preferably formed of a suitable plastic, such as acetal resin, is positioned within each pair of aligned recesses 37 and 42 to be horizontally movable between three combination positions. Each slide button 44 consists of a flat generally rectangular body 45, received in the recesses 37, 42, having an actuating projection 46 on the front surface 47 extending through the horizontal portion of the T-shaped slot 35 and into the recess 33 to be manually engaged by the finger of the user. The body 45 is provided at one end with a U-shaped notch 48 defining a lower lateral detent finger 49 terminating in a forwardly projecting end 51. The end 51 yieldably engages one of the series of depressions 39 to retain the body in a given combination position.

On the rear surface 52 of the body is a guide projection 53 which is received in the opening 43 in the recess 42; the projection being positioned centrally between the ends of the body and adjacent the lower edge thereof. Integral with and extending rearwardly and downwardly from the guide projection 53 is a locking finger 54 terminating at its lower end in a forward locking projection 55 having an upper locking surface 56 and a lower inclined camming surface 57. The projection 55 cooperates with the rib 26 or 26' of the slidable cover 15 to lock the cover in a closed position on the container 10.

As seen from FIG. 12, the finger engaging projection 46 for the slide button 44 is centrally positioned on the button base 45, and below the projection 46 are three raised numbers 58 to indicate the three combination positions of the button. The numbers 58 are so positioned that only one number will be exposed in the stem portion of the T-shaped slot 35 at any one time. Thus, the number showing in the stem portion of the slot 35 indicates the lateral position of the slide button 44. Also, raised numbers 59 may be formed on the surface 23 of the cover 15 to indicate the position of the gates 27, 27 or 27', 27', and thus indicate the positions or combination of the slide buttons 44 which will allow opening of the cover 15.

In operation, with the cover 15 closed and the locking surfaces 56 of the locking fingers 54 engaging the locking surface 61 of the rib 26, the cover 15 is locked on the container 10 as shown in FIGS. 1, 2 and 3. As seen in FIG. 8, the combination for the end 22 of the cover 15 is I on the left and III on the right. By moving the buttons 44, 44 to that combination, the latching fingers 54, 54 are aligned with the gates 27, 27 and the cover 15 can be moved to open position, or completely out of the tracks 14, 14 if so desired.

The false or dummy gates 28 are provided on one or each side of a gate 27 or 27' to provide added security in preventing unauthorized opening of the container. The locking fingers also function as a latch if the container 10 is ulocked and the cover 15 is pushed to its open position (FIG. 6). With the buttons shifted to positions other than the proper combination, the cover 15 can be closed and the rib 26 will engage the camming surfaces 57 and cam the fingers 54, 54 rearwardly until the rib 26 passes the undercut surfaces 56, 56 to allow the fingers to snap behind the rib and latch the cover to locked position.

If the user wishes to change the combination for the container, the cover 15 can be removed from the tracks 14, 14 and turned 180° end for end so that the end 22' will now engage the recess 31 of the top plate 29 to

provide a combination of II on the left and III on the right. Although this mechanism has been shown with two slide buttons 44, 44, each button having three positions, it is obvious that the mechanism could have one button or more than two buttons, each button having two or more combination positions. Also, as seen in FIG. 4, strips or patches 62 of double-faced pressure sensitive tape are adhesively attached to the exterior surface of the rear wall 11 so that the container 10 may be quickly and easily secured in place in a medicine cabinet or chest; the container 10 provided for locking away potentially harmful medicines or other substances.

Having thus disclosed our invention, we claim:

1. A combination latch and locking mechanism for a container provided with a slidable cover reciprocable in grooves in the sides of the container, comprising a transverse rib adjacent one end of theslidable cover having at least one gate therein, at least one slide button in the container movable in a direction parallel to said transverse rib and having a depending locking finger engageable with the transverse rib, said slide button being movable between a series of combination positions, one of which provides alignment of the locking finger with the gate in said transverse rib, and an actuating projection formed on said slide button, said container having an elongated transverse opening through which said actuating projection is exposed for manual actuation.

2. A combination latch and locking mechanism for a container provided with a slidable cover reciprocable in grooves in thesides of the container, comprising a transverse rib adjacent one end of the slidable cover having at least one gate therein, at least one movable slide button in the container having a depending locking finger engageable with said transverse rib, an actuating projection on said slide button, said container including a pair of plates having aligned recesses receiving said slide button, one plate having an elongated opening therein communicating with said recesses and through which said actuating projection is exposed for manual actuation, a series of depressions formed on the wall of one plate, and a laterally extending flexible detent finger on said slide button cooperating with any one of said depressions to yieldably retain said slide button in a combination position.

3. A combination latch and locking mechanism as set forth in calim 2, in which the rearward plate has an elongated horizontal opening therein generally aligned with the recesses, and a guide projection on the rear surface of said slide button received in said last mentioned opening.

4. A combination latch and locking mechanism as set forth in claim 3, in which said locking finger extends rearwardly and downwardly from said guide projection through said last mentioned opening to cooperate with the transverse rib on said cover.

5. A combination latch and locking mechanism for a container provided with a slidable cover reciprocable in grooves in the sides of the container, comprising a transverse rib adjacent one end of the slidable cover having a least one gate therein, and at least one movable slide button in the container having a depending locking finger engageable with said transverse rib, and an actuating projection on said slide button, said container having an elongated opening through which said actuating projection is exposed for manual actuation, said elongated opening having a T-shape with the horizontal portion of the T receiving said actuating projection to allow lateral movement of the slide button, and a plurality of raisel numbers formed on said slide button and so arranged that any one number is exposed in the stem portion of the T opening.

6. A combination latch and locking mechanism as set forth in claim 5, in which said locking finger terminates in a forward locking projection having a camming surface and an undercut locking surface adapted to engage a locking surface on said transverse rib.

7. A combination latch and locking mechanism for a container provided with a slidable cover reciprocable in

grooves in the sides of the container, comprising a transverse inwardly extending rib adjacent each end of the slidable cover, each rib having at least one gate therein, and at least one movable slidable button in the container having a depending locking finger engageable with said transverse rib, said gates at the opposite ends of the cover providing different locking combinations, and an actuating projection on said slide button, the container having an elongated opening through which said actuating projection is exposed for manual actuation.

8. A combination latch and locking mechanism for a container provided with a slidable cover reciprocable in grooves in the sides of the container, comprising a transverser ib adjacent one end of the slidable cover having a pair of spaced gates therein, and a pair of movable slide buttons in the container cooperating with said transverse rib, each slide button having a depending locking finger engageable with said transverse rib and cooperating with a gate, each button having at least three combination positions, and an actuating projection on each slide button, the container having an elongated opening for each slide button through which the actuating projection is exposed for manual actuation.

9. A combination latch and locking mechanism as set forth in claim **8**, in which said transverse rib has at least one recess adjacent each gate forming dummy gates.

References Cited

UNITED STATES PATENTS

470,438	3/1892	McGRATH	70—304
495,911	4/1893	Ringen	70—298
612,335	10/1898	Haggstrom	70—287
2,476,062	7/1949	Pierce	70—298
2,936,189	5/1960	Pearson	292—42
3,115,762	12/1963	Nemsky	70—63
3,187,926	6/1965	Zimmet	220—41

GEORGE F. MAULTZ, Primary Examiner

E. J. McCARTHY, Assistant Examiner

U.S. Cl. X.R.

70—63