Z. H. LOTZ.

JAR CLOSURE.

APPLICATION FILED JUNE 8, 1915. RENEWED APR. 10, 1916.

1,182,917. Patented May 16, 1916.

Fig. 1.

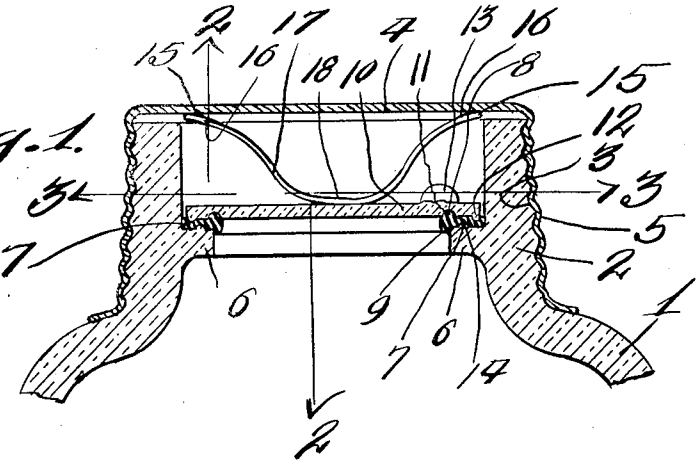


Fig. 3.

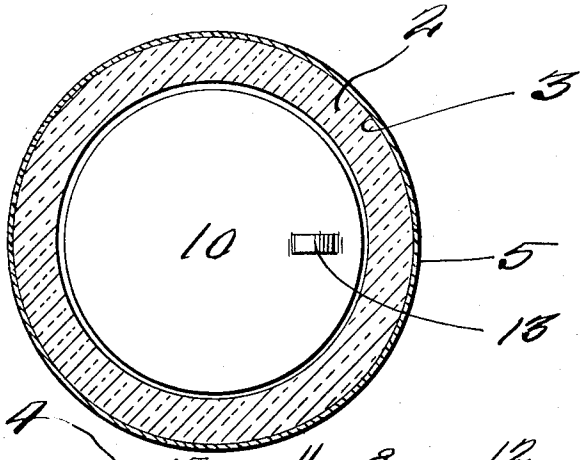


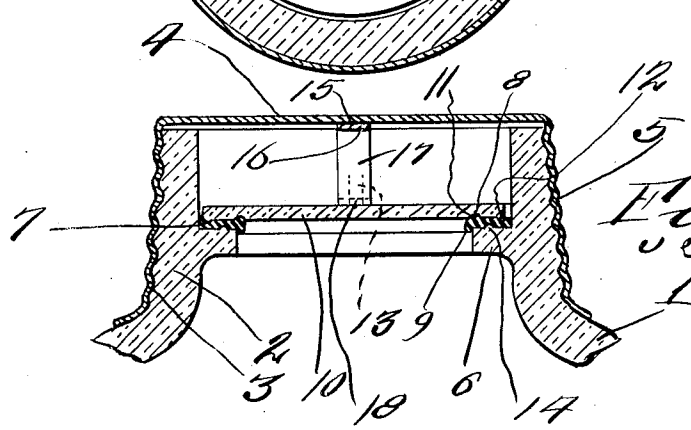


Fig. 2.

Inventor

Z. H. Lotz

Witnesses

Philip Terrell

Francis G. Powell

By D. Swift & Co

Attorneys

# UNITED STATES PATENT OFFICE.

ZENON HUBER LOTZ, OF EUNICE, LOUISIANA.

## JAR-CLOSURE.

1,182,917. Specification of Letters Patent. Patented May 16, 1916.

Application filed June 8, 1915, Serial No. 32,904. Renewed April 10, 1916. Serial No. 90,278.

*To all whom it may concern:*

Be it known that I, ZENON H. LOTZ, a citizen of the United States, residing at Eunice, in the parish of St. Landry and State of Louisiana, have invented a new and useful Jar-Closure; and I do hereby declare the following to be a full, clear, and exact description of the invention, such as will enable others skilled in the art to which it appertains to make and use the same.

This invention relates to an improved jar closure, and an object of the invention is to provide the interior walls of the neck of the jar with an annular flange, on which a rubber gasket is seated, there being an annular plate engaging upon the gasket, in combination with means carried by the underface of the top of a cap, to press the plate against the gasket, as the cap is screwed on the neck of the jar, thereby sealing and securing the washer in place.

In practical fields the details of construction may necessitate alterations, falling within the scope of what is claimed.

The invention comprises further features and combination of parts, as hereinafter set forth, shown in the drawings and claimed.

In the drawings:—Figure 1 is a sectional view through the neck portion of the jar, showing the improved jar closure as applied thereto. Fig. 2 is a sectional view at right angles to Fig. 1 upon line 2—2 of Fig. 1. Fig. 3 is a horizontal sectional view on line 3—3 of Fig. 1.

Referring to the drawings 1 designates the upper portion of a jar having a neck 2, which is exteriorly threaded in the usual manner, as shown at 3. A cap 4 is provided, the annular flange 5 of which is likewise threaded, as shown, to engage the threads 3. The interior wall of the neck 2, substantially midway the height of the neck, is provided with an annular flange 6. Seated on the flange 6 is a rubber gasket 7, which is provided with upwardly and downwardly extending annular bulges 8 and 9, adjacent the inner edge of said gasket. A suitable plate 10, which may be constructed of any suitable material, preferably glass or the like, is provided. The underface of the plate 10 slightly inwardly from the edge of the plate is provided with a groove 11, to receive the upper bulge 8 of said gasket. The lower bulge 9 of said gasket extends downwardly and fits the inner annular face of the flange 6. The plate 10 adjacent its peripheral edge is constructed with an annular bead 12, which, when the plate 10 is forced downwardly upon the gasket, embeds into the upper surface of said gasket, and owing to this structure and the provision of the groove 11 and the bulge 8 an irregular contact is insured between the gasket and said plate 10, thereby rendering it difficult for the fluid that may be in the jar to leak past such joint. The upper face of the plate 10, is provided with a suitable lug or projection 13 adapted to be grasped, whereby the plate may be inserted or removed. The upper face of the flange 6 is also provided with an annular bead 14, which embeds upwardly in the underface of said washer, to provide an irregular contact between the gasket and said flange 6, serving the same purpose as the contact between the plate 10 and the gasket. Soldered at 15 to the under surface of the top of the cap 4 are the ends 16 of the bowed spring 17, the bulged part 18 of which bears down against the plate 10, as shown in Fig. 1, as the cap 4 is screwed upon the neck of the jar, thereby causing fluid tight connections between the contacting parts, namely, the flange 6, the gasket 7, and the plate 10.

The invention having been set forth, what is claimed as new and useful is:—

In combination with a neck of a jar provided upon its interior wall with an annular flange, the upper surface of which is provided with an annular bead, a gasket engaging upon the flange, and into which gasket the bead embeds, said gasket adjacent the edge of the opening of the gasket being provided with a bead upon its upper surface, a plate engaging upon the gasket and provided with an annular groove on its under surface to receive the bead of the upper face of the gasket, said plate upon its under surface adjacent its edge having a bead to embed in the upper face of the gasket, the bead of the flange being intermediate the bead of said plate and the bead of said gasket, the gasket having an annular bead or bulge adjacent the opening of the gasket

and extending downwardly against the inner surface of said flange, a closure threaded to the neck and having a bowed spring carried by the under surface of the top of the closure to bear yieldably upon the plate thereby causing a tight fit between the plate, the gasket and said flange.

In testimony whereof I have signed my name to this specification in the presence of two subscribing witnesses.

ZENON HUBER LOTZ

Witnesses:
J. L. STAGG,
J. W. BASSETT.