Feb. 9, 1932. A. E. ANDERSON 1,844,626

SEALED SOLENOID COIL

Filed Jan. 12, 1928

Fig-1

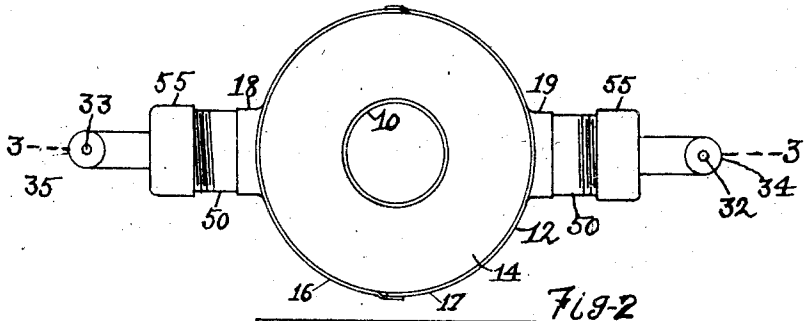

Fig-2

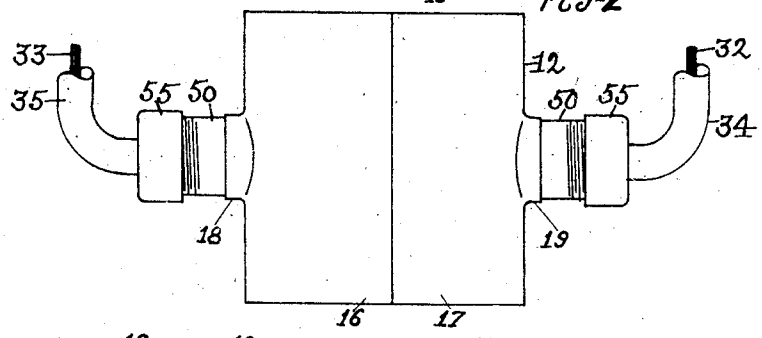

Fig-3

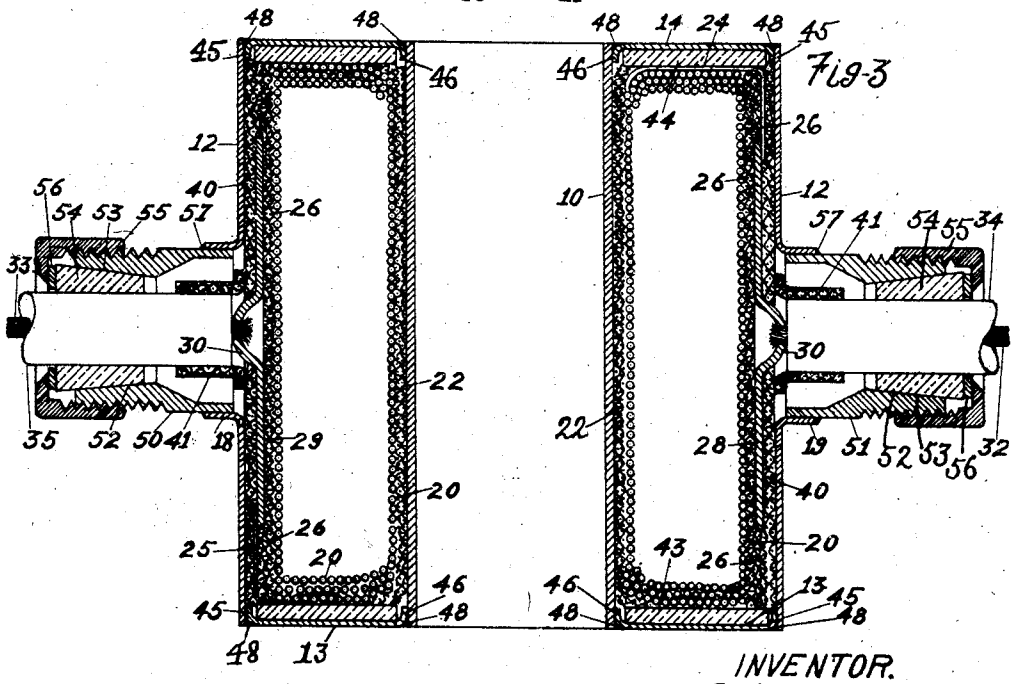

INVENTOR.
Alf E. Anderson
by Jas. H. Churchill
Atty.

Patented Feb. 9, 1932 1,844,626

UNITED STATES PATENT OFFICE

ALF R. ANDERSON, OF MILTON, MASSACHUSETTS

SEALED SOLENOID COIL

Application filed January 12, 1928. Serial No. 246,248.

This invention relates to a solenoid coil and a container therefor in which the solenoid is sealed against the deleterious influences of external moisture, gases, and the like, yet is provided with conductors or leads which are accessible outside the container for connection of the solenoid coil in an electric circuit. The sealed solenoid coil is especially adapted for use in junction boxes, manholes and like places where moisture, steam, fumes, and gases are liable to be present.

In accordance with this invention, the solenoid coil is located in a container which has a tubular inner member extended into the coil, and is provided with one or more openings through which conductors outside of the container are extended into the container and electrically connected with the coil within the container, and said openings are provided with means for sealing them about the said conductors.

In the preferred embodiment of the invention illustrated herein, provision is made for hermetically sealing the container except at the openings for the leads or conductors, and for relieving the joints between the leads or conductors and the ends of the solenoid coil from strain, as will be described.

The container may and preferably will be constructed as will be described, whereby the inner tubular member of the container serves as the core upon which the coil is wound, and whereby the completed coil is insulated from the container by insulating material additional to that of the wire from which the coil is formed.

These and other features of this invention will be pointed out in the claims at the end of this specification.

Fig. 1 is a plan view of the sealed solenoid coil embodying this invention;

Fig. 2, a side elevation of the sealed coil shown in Fig. 1, and

Fig. 3, a vertical central section on an enlarged scale taken on the line 3—3, Fig. 1, the coil being but partially shown.

In the present instance a preferred construction of sealing container is illustrated, which is preferably made of sheet metal and consists of a tubular inner member 10, a tubular outer member 12, end disks or heads 13, 14, which are spot welded, soldered or otherwise hermetically secured to the inner and outer members 10, 12.

The outer tubular member 12 is preferably made in two parts or halves 16, 17 having outwardly extended hollow bosses 18, 19, and one of said halves as 16 is constructed so as to overlap the other half 17 as represented in Fig. 1, the joints thus formed being soldered or otherwise rendered fluid-tight.

Before the parts of the container are assembled and secured together, the inner tubular member 10 is used as a form or core upon which the solenoid coil 20 is wound, and it is preferred to provide the inner tubular member 10 with a covering 22 of insulating material, preferably an insulating fabric which is wound upon the inner tubular member 10 a plurality of times.

The insulated wire from which the solenoid coil 20 is formed is wound upon the insulation 22 on the inner tubular member 10 until the coil is of the proper or desired size to meet the requirements of use.

A length of wire is left free or unwound from the inner tubular member 10 to form a free inner end 24 of the coil, which end is of sufficient length to enable it to be led to the outside of the solenoid coil as represented in Fig. 3, and a length of the wire at the outer side of the coil is left to form a free outer end 25. The free inner and outer ends 24, 25 of the coil are made of sufficient length to extend over an outer covering 26 of insulating fabric wound upon the solenoid coil 20.

The free inner and outer ends 24, 25 of the coil 20 are preferably arranged on opposite sides of the coil, and are soldered or spot welded to metal strips 28, 29, preferably of copper, said strips being provided with substantially central curved portions 30, which are extended outwardly with relation to the solenoid coil.

The metal strips 28, 29 have extended through suitable openings in the curved portions 30, the inner ends of conductors or leads 32, 33, which leads are provided with the usual insulating coverings 34, 35 and are of relatively short lengths but sufficient to en-

able their outer ends to be electrically connected in the circuit in which the solenoid coil 20 is to be included.

The conductors or leads 32, 33 are soldered or spot welded to the inner side of the curved portions 30 of the metal strips 28, 29, which is effected before the metal strips are electrically connected with the free ends 24, 25 of the solenoid coil. After the metal strips 28, 29 have been electrically connected with the free ends 24, 25 of the coil, the said free ends and the metal strips are mechanically attached to the coil by winding strips 40 of insulating fabric on the outside of the coil and on opposite sides of the curved center portions 30 of the metal strips.

The strips 40 of fabric serve to insulate the free ends 24, 25 and the metal strips 28, 29 from the outer tubular member 12 and also to mechanically secure the metal strips and the free ends of the coil to the outside of the coil, and thereby protect the electrical connection between the free ends of the coil and the metal strips from rupture or injury by strains placed upon the conductors or leads 32, 33.

The curved portions 30 of the metal strips are also sealed against moisture by strips 41 of insulating fabric wound upon the inner ends of the conductors or leads 32, 33 and upon the strips 40 of fabric.

The solenoid coil 20 is insulated from the metal ends or heads 13, 14 of the container by washers or rings 43, 44 of insulating material, which are fitted into grooves or channels on the inner sides of the end disks or heads 13, 14 formed by outer and inner annular flanges 45, 46 on said disks or heads.

The insulating rings or washers 43, 44 are preferably of greater thickness than the depth of the annular flanges 45, 46 so as to contact with the ends of the solenoid coil 20 and insulate the latter from the metal end disks or heads 13, 14 of the container. The end disks or heads 13, 14 are hermetically sealed to the inner and outer tubular members of the container by solder, represented by the heavy black lines 48.

The hollow bosses 18, 19 on the outer tubular member 12 have soldered or otherwise secured to them metal tubular members 50, 51 provided with tapering inner walls 52, with which co-operate the externally tapered surfaces 53 of rubber or like sleeves 54 fitted over the leads or conductors and compressed about the same to make a fluid-tight joint therewith, by internally threaded caps 55 which engage external screw-threads on the tubular members 50.

Preferably a washer 56 is interposed between the head of the cap 55 and the end of the rubber sleeve 54.

The joints between the hollow bosses 18, 19 and the tubular metal members 50 are hermetically sealed by solder represented by the heavy black line 57.

From the above description and by reference to the drawings it will be seen that the solenoid coil 20 and a portion of its leads 32, 33 are sealed within a container against the deleterious action of moisture, gases, fumes and the like, and is especially serviceable in places where these elements are present, as for instance in manholes, junction boxes and the like located under the ground.

It will also be observed that the ends of the solenoid coil are connected within the sealing container by metal strips, which constitute terminal members for the conductors or leads which are mechanically secured to the coil and serve as anchors for the conductors or leads within the sealing container and relieve the ends of the coil from strain placed upon the portion of the leads on the outside of the container.

It will further be observed that the joint between the anchoring terminal members 28, 29 and the metal conductors 32, 33 of the leads, is sealed against moisture, gases, fumes and the like by the insulating fabric 41 and also by the rubber or like packing member 54.

One embodiment of the invention is herein shown and described, but it is not desired to limit the invention to the particular construction shown.

What is claimed is:

1. The combination with a solenoid coil, of a moisture-proof container therefor provided with an opening and having a tubular inner member extended into said coil, a conductor separate from said coil and extended through said opening and provided within the container with an anchoring member electrically connected with said coil, insulating means within the container for mechanically securing said anchoring member in fixed relation to said coil against strain placed upon the conductor outside of said container, and means for sealing the solenoid coil within the said container to prevent the admission of moisture into the container.

2. The combination with a container provided with an inner tubular member, an outer tubular member provided with openings, heads connecting said tubular members and hermetically sealed thereto, a solenoid coil within said container wound upon said inner tubular member and insulated therefrom, conductors extended through the openings in said outer tubular member, anchoring terminals for said conductors electrically connected with the opposite ends of said coil within the container, insulating means interposed between said anchoring terminals and said outer tubular member for mechanically securing said anchoring terminals to said coil, and means for sealing said openings about said conductors.

3. The combination with a solenoid coil, of a moisture-proof container therefor provided with an inner tubular member extend-

ed into said coil and having an outer member hermetically sealed to the tubular member and provided with an opening, a conductor extended through said opening and provided with an anchoring member electrically connected with said coil within the container, insulating means within the container for mechanically securing said anchoring member in fixed relation to said coil to relieve the electrical connection of said anchoring member with said coil from strain, and means for sealing said opening about said conductor to cooperate with the hermetical sealing of the container and provide the coil with a metallic container submersible in water and sealed against the entrance of water therein when submerged for long periods of time.

In testimony whereof, I have signed my name to this specification.

ALF E. ANDERSON.