(CONVENTION. By one or more persons and/or a Company.) Form 4

630344

COMMONWEALTH OF AUSTRALIA

Patents Act 1952-1969

CONVENTION APPLICATION FOR A PATENT

(1) Here insert (in full) Name or Names of Applicant or Applicants, followed by Address (es).

I/We (1) THE PROCTER & GAMBLE COMPANY

of One Procter & Gamble Plaza

Cincinnati, Ohio 45202

United States of America

(2) Here insert Title of Invention.

hereby apply for the grant of a Patent for an invention entitled: (2)

ABSORBENT ARTICLE

(3) Here insert number(s) of basic application(s)

which is described in the accompanying complete specification. This application is a Convention application and is based on the application numbered (3)

07/175,816

(4) Here insert Name of basic Country or Countries, and basic date or dates

for a patent or similar protection made in (4) United States of America

Filed: 31st March, 1988.

My/Our address for service is Messrs. Edwd. Waters & Sons, Patent Attorneys, 50 Queen Street, Melbourne, Victoria, Australia.

DATED this 29th day of March, 1989.

(5) Signature (s) of Applicant (s) or Seal of Company and Signatures of Its Officers as prescribed by its Articles of Association

(5) THE PROCTER & GAMBLE COMPANY

By; Louis C. Gebhardt

Registered Patent Attorney

To:

THE COMMISSIONER OF PATENTS.

COMMONWEALTH OF AUSTRALIA

Patents Act 1952-1969

DECLARATION IN SUPPORT OF A CONVENTION APPLICATION FOR A PATENT OR PATENT OF ADDITION

(1) Here insert (in full) Name of Company.

In support of the Convention Application made by(1) THE PROCTER & GAMBLE COMPANY

(hereinafter referred to as the applicant) for a Patent

(2) Here insert title of Invention.

for an invention entitled:(2) ABSORBENT ARTICLE

(3) Here insert full Name and Address, of Company official authorized to make declaration.

I,(3) Richard Charles Witte

of The Procter & Gamble Company
One Procter & Gamble Plaza
Cincinnati, Ohio 45202, U.S.A.

do solemnly and sincerely declare as follows:

1. I am authorised by the applicant for the patent to make this declaration on its behalf.

2. The basic application as defined by Section 141 of the Act was made in(4) United States on the 31st day of March 19 88 by Kenneth Barclay Buell

~~on the xx day of xx 19 xxxxxxxx by~~

(5) Here insert (in full) Name and Address of Actual Inventor or Inventors.

3.(5) Kenneth Barclay Buell
218 Brodorf Drive
Cincinnati, OH 45215
USA

is/~~are~~ the actual inventor of the invention and the facts upon which the applicant is entitled to make the application are as follow:

The applicant is the assignee of the invention from the actual inventor(s).

4. The basic application referred to in paragraph 2 of this Declaration was the first application made in a Convention country in respect of the invention the subject of the application.

DECLARED at Cincinnati, Ohio U.S.A.

this 15th day of May 19 89

(6) Signature.

X (6) Richard Charles Witte
Assistant Secretary

To: THE COMMISSIONER OF PATENTS.

Edwd. Waters & Sons, Melbourne.

(12) PATENT ABRIDGMENT (11) Document No. AU-B-32239/89
(19) AUSTRALIAN PATENT OFFICE (10) Acceptance No. 630344

(54) Title
ABSORBENT ARTICLE WITH CONFORMABLE SHAPE

International Patent Classification(s)
(51)[5] A61F 013/46

(21) Application No. : 32239/89 (22) Application Date : 30.03.89

(30) Priority Data

(31) Number	(32) Date	(33) Country
175816	31.03.88	US UNITED STATES OF AMERICA

(43) Publication Date : 05.10.89

(44) Publication Date of Accepted Application : 29.10.92

(71) Applicant(s)
THE PROCTER & GAMBLE COMPANY

(72) Inventor(s)
KENNETH BARCLAY BUELL

(74) Attorney or Agent
WATERMARK PATENT & TRADEMARK ATTORNEYS , Locked Bag 5, HAWTHORN VIC 3122

(56) Prior Art Documents
US 4631062
US 4701177

(57) Claim

1. An externally worn disposable absorbent article, comprising:

a moisture pervious topsheet;

a moisture impervious backsheet associated with said topsheet;

an absorbent means intermediate said topsheet and said backsheet;

a body-facing surface associated with said topsheet; and

a moisture stable deformation element associated with said absorbent means, said deformation element being flexure-resistant, as herein defined, at least a portion of said body-facing surface having a convex upward configuration when said article is subjected to lateral compressive forces of the wearer's thighs.

630344

Form 10

COMMONWEALTH OF AUSTRALIA

PATENTS ACT 1952-69

COMPLETE SPECIFICATION

(ORIGINAL)

Class Int. Class

Application Number:
Lodged:

Complete Specification Lodged:
Accepted:
Published:

Priority :

Related Art :

Name of Applicant : THE PROCTER & GAMBLE COMPANY

Address of Applicant : One Procter & Gamble Plaza, Cincinnati, Ohio 45202 United States of America

Actual Inventor: KENNETH BARCLAY BUELL

Address for Service : EDWD. WATERS & SONS,
50 QUEEN STREET, MELBOURNE, AUSTRALIA, 3000.

Complete Specification for the invention entitled.

ABSORBENT ARTICLE

The following statement is a full description of this invention, including the best method of performing it known to :- me

ABSORBENT ARTICLE

BACKGROUND OF THE INVENTION

1. Field of the invention

The present invention relates to disposable absorbent articles and more particularly to female sanitary napkins. Particularly, the present invention concerns sanitary napkins offering enhanced fit and confort through a construction which promotes a continuously self-conforming anatomical cooperation of the sanitary napkin to the wearer to yield a highly effective absorbent device.

2. Background Art

All manner and variety of absorbent articles configured for the absorption of body fluids such as menses, urine and feces are, of course, well known. With respect to feminine protection devices, the art has offered two basic types; sanitary napkins have been developed for external wear about the pudendal region while tampons have been developed for internal wear within the vaginal cavity for interruption of menstrual flow therefrom. Such tampon devices are disclosed in U.S. Patent 4,412,833, entitled "Tampon Applicator", which patent issued to Wiegner et al. on November 1, 1983, and U.S. Patent 4,413,986, entitled "Tampon Assembly With Means For Sterile Insertion", which patent issued to Jacobs on November 8, 1983.

Hybrid devices which attempt to merge the structural features of the sanitary napkins and the tampons into a single device have also been proposed. Such hybrid devices are disclosed in U.S. Patent 2,092,346, entitled "Catamenial Pad", which patent issued to Arone on September7, 1937, and U.S. Patent 3,905,372, entitled "Feminine Hygiene Protective Shield", which patent issued to Denkinger on September 16, 1975. Other less intrusive hybrid devices are known as labial or interlabial

sanitary napkins and are characterized by having a portion which at least partially resides within the wearer's vestibule and a portion which at least partially resides external of the wearer's vestibule. Such devices are disclosed in U.S. Patent 2,662,527, entitled "Sanitary Pad", which patent issued to Jacks on December 15, 1953, and U.S. Patent 4,631,062, entitled "Labial Sanitary Pad", which patent issued to Lassen et al. on December 23, 1986.

With respect to sanitary napkins, at least three general classes of design exist. One such design includes those sanitary napkins which are generally cupped or boat-shaped and which are intended to catch menses as it runs or drips from the vaginal orifice. These sanitary napkins generally bow downwards, when worn, thus forming a cup-shape. Sanitary napkins of this class are disclosed in U.S. Patent 3,570,493, entitled "Sanitary Towel", which patent issued to Olson on March 16, 1971, and U.S. Patent 4,655,759, entitled "Reduced Leakage Menstrual Pad With Built-In Fold Lines", which patent issued to Romans-Hess et al. on April 7, 1987. A disposable urinary incontinence device which functions under the same principal is disclosed in U.S. Patent 4,685,914, entitled "Disposable Urinary Pad", which patent issued to Holtman on August 11, 1987.

A second class of sanitary napkin designs include those that are raised upwardly or humped in their medial portions so as to be near or in contact with the pudendal region when worn. These sanitary napkins attempt to contact and absorb menses immediately as it leaves the vestibule. Sanitary napkins of this class are disclosed in U.S. Patent 2,064,431, entitled "Catamenial Bandage", which patent issued to Jurgensen on December 15, 1936, U.S. Patent 2,747,575, entitled "Catamenial Bandages", which patent issued to Mercer on May 29, 1956, U.S. Patent 3,575,174, entitled "Sanitary Napkin", which patent issued to Mogor on April 20, 1971, and U.S. Patent 4,701,177, entitled "Three-Dimensional Shaped Feminine Pad With Narrow, Absorbent Center and Winged Edges", which patent issued to Ellis et al. on October 20, 1987.

The third class of sanitary napkin designs include those that are not predisposed to have a trough or a hump shape when worn, but instead have a more or less rope-like shape when worn. Such sanitary napkins typically have a fluff pulp absorbent core surrounded by flexible outer wraps and when the sanitary napkin is subjected to compressive forces from the wearer's thighs the fluff pulp core simply compacts or bunches into an arbitrary, but generally rope-like shape. Sanitary napkins of this class are disclosed in U.S. Patent 3,294,091, entitled "Sanitary Napkin", which patent issued to Morse on December 27, 1966, U.S. Patent 4,654,040, entitled "Smooth-Edged Contoured Sanitary Napkin", which patent issued to Luceri on March 31, 1987, and U.S. Patent 4,687,478, entitled "Shaped Sanitary Napkin With Flaps", which patent issued to Van Tilburg on August 18, 1987. Attempts have been made to prevent the bunching effect of such compaction type sanitary napkins by providing them with a form-retaining member. Such sanitary napkins are disclosed in U.S. Patent 4,195,634, entitled "Sanitary Napkin With Resilient Stiffening Means", which patent issued to DiSalvo et al. on April 1, 1980, and U.S. Patent 4,405,326, entitled "Catamenial Bandage", which patent issued to Lenaghan on September 20, 1983.

While the sanitary napkins and other devices discussed above do provide some measure of success in absorbing and containing body exudates, they fail to address the need for a sanitary napkin which by the mere act of putting it on will itself merge in with, closely conform to and fit exactly the cross-sectional outline of the pudendal region as soon as applied without requiring the usual bending, twisting or other adjustments or manipulations, and which will always retain such conformity simply due to its flexure-resistant, reformable and resilient characteristics.

Therefore, it is an object of the present invention to provide a sanitary napkin which by the mere act of putting it on will itself merge in with, closely conform to, and fit exactly the cross-sectional outline of the external surfaces of the pudendal region.

It is an additional object of the present invention to provide a sanitary napkin which will change its shape so as to conform to the changing shape of the pudendal region when the wearer is running, squatting, crossing her legs, etc.

It is an additional object of the present invention to provide a sanitary napkin having a flexure-resistant deformation element which causes the body surface of the sanitary napkin to remain in intimate contact with the external surfaces of the labia majora.

It is an additional object of the present invention to provide a sanitary napkin having a flexure-resistant deformation element wherein the body surface of the napkin has a convex upward configuration when the napkin is subjected to the lateral compressive forces of the wearer's thighs.

It is an additional object of the present invention to provide a sanitary napkin having a flexure-resistant deformation element wherein the body surface of the napkin is generally cupped-shaped in the front region, generally "W" shaped in the central region and generally inverted "V" shaped in the back region of the napkin.

These and other objectives of the present invention will be more readily apparent when considered in reference to the following description and when taken in conjunction with the accompanying drawings.

SUMMARY OF THE INVENTION

The present invention is directed to a disposable absorbent article, and particularly a sanitary napkin, having a flexure-resistant deformation element, the sanitary napkin having a body-facing surface of which at least a portion which has a convex upward configuration when the sanitary napkin is worn. Primarily without relying on lateral compressive forces of the wearer's labia, the sanitary napkin of the present invention relies on the lateral compressive forces of the wearer's thighs in order to form or maintain a convex upward configuration when the sanitary napkin is worn. In a preferred

AUSTRALIAN PATENT OFFICE LS

embodiment, the deformation element has a means for inducing the body surface of the sanitary napkin to have a convex upward configuration when the sanitary napkin is worn. In an alternatively preferred embodiment, the sanitary napkin has a central region having a "W" shaped cross-section wherein the body surface of the sanitary napkin having the convex upward configuration is located in the central region, generally symmetrically between the longitudinal side edges of the sanitary napkin. In another alternatively preferred embodiment, the sanitary napkin has a cup-shaped front region and a back region having a convex upward configured body surface. The deformation element may be a moldable substance such as a foam, it may be reformable and/or it may be resilient.

BRIEF DESCRIPTION OF THE DRAWINGS

While the specification concludes with claims particularly pointing out and distinctly claiming the subject matter which is regarded as forming the present invention, it is believed that the invention will be better understood from the following descriptions which are taken in conjunction with the accompanying drawings in which like designations are used to designate substantially identical elements and in which:

Figure 1 is a top plan view of a preferred sanitary napkin embodiment of the present invention with the portion of the sanitary napkin which contacts the wearer facing the viewer.

Figure 2 is a side view of the preferred sanitary napkin embodiment shown in Figure 1.

Figure 3 is an end view of the preferred sanitary napkin embodiment shown in Figure 1.

Figure 4 is a lateral cross-sectional view of the preferred sanitary napkin embodiment shown in Figure 1 taken along section line 4-4 of Figure 1.

Figure 5 is a longitudinal cross-sectional view of the preferred sanitary napkin embodiment shown in Figure 1 taken along section line 5-5 of Figure 1.

Figure 6 is a top plan view of a preferred deformation element embodiment of the preferred sanitary napkin embodiment shown in Figure 1.

Figure 7 is a bottom plan view of the preferred deformation element embodiment shown in Figure 6.

Figure 8 is a lateral cross-sectional view of the preferred deformation element embodiment shown in Figure 6 taken along section line 8-8 of Figure 6.

Figure 9 is a lateral cross-sectional view of the preferred sanitary napkin embodiment shown in Figure 1 taken along section line 9-9 of Figure 1 through the portion of the sanitary napkin which is disposed beneath the center of the vaginal orifice when the sanitary napkin is worn.

Figure 10 is a top plan view of the test apparatus plungers.

Figure 11 is a view of a cast molded lateral cross-section of the preferred sanitary napkin embodiment shown in Figure 1 when the sanitary napkin is being worn, the cross-section being taken along the lateral centerline of the sanitary napkin.

Figure 12 is a top plan view of the preferred sanitary napkin embodiment shown in Figure 1 being worn by a female who is naked and in the standing position with the sanitary napkin being subjected to lateral compressive forces by the wearer's thighs.

Figure 13 is a side view of the preferred sanitary napkin embodiment shown in Figure 12.

Figure 14 is a lateral cross-sectional view of an alternatively preferred sanitary napkin embodiment of the present invention which is being worn, the cross-section being taken through that

portion of the sanitary napkin which is disposed beneath the center of the vaginal orifice when the sanitary napkin is worn.

Figure 15 is a lateral cross-sectional view of a sanitary napkin which is being worn, the sanitary napkin not being within the scope of the present invention.

Figure 16 is a lateral cross-sectional view of the preferred sanitary napkin embodiment shown in Figure 12 taken along section line 16-16 of Figure 12 through the portion of the sanitary napkin which is disposed beneath the center of the vaginal orifice when the sanitary napkin shown in Figure 1 is worn.

Figure 17 is a lateral cross-sectional view of the preferred sanitary napkin embodiment shown in Figure 12 taken along section line 17-17 of Figure 12.

Figure 18 is a lateral cross-sectional view of the preferred sanitary napkin embodiment shown in Figure 12 taken along section line 18-18 of Figure 12.

Figure 19 is a lateral cross-sectional view of the preferred sanitary napkin embodiment shown in Figure 12 taken along section line 19-19 of Figure 12.

Figure 20 is a depiction of the lateral cross-sectional view of the preferred sanitary napkin embodiment shown in Figure 16, depicting the deformation of the sanitary napkin when the body surface of the sanitary napkin makes intimate contact with the pudendal region of a wearer.

Figure 21 is a top plan view of an alternatively preferred sanitary napkin embodiment of the present invention having portions cut away to reveal underlying structure and with the portion of the sanitary napkin which contacts the wearer facing the viewer.

Figure 22 is a lateral cross-sectional view of the alternatively preferred sanitary napkin embodiment shown in Figure 21 taken along section line 22-22 of Figure 21.

Figure 23 is a lateral cross-sectional view of another alternatively preferred sanitary napkin embodiment of the present invention taken through the portion of the sanitary napkin which is disposed beneath the center of the vaginal orifice when the sanitary napkin is worn.

Figure 24 is a bottom plan view of another alternatively preferred sanitary napkin embodiment of the present invention, the backsheet not being shown.

Figure 25 is a side view of the alternatively preferred sanitary napkin embodiment shown in Figure 24, when worn, the backsheet and topsheet not being shown.

Figure 26 is a bottom plan view of an alternatively preferred sanitary napkin embodiment of the present invention in its flat-out, untensioned state, the backsheet not being shown.

Figure 27 is a top perspective view of the alternatively preferred sanitary napkin embodiment shown in Figure 26, the backsheet and topsheet not being shown.

Figure 28 is a top plan view of another alternatively preferred sanitary napkin embodiment of the present invention, the topsheet not being shown.

Figure 29 is a bottom plan view of another alternatively preferred sanitary napkin embodiment of the present invention.

Figure 30 is a top perspective view of the alternatively preferred sanitary napkin embodiment shown in Figure 29 as it would appear when worn.

DETAILED DESCRIPTION OF PREFERRED EMBODIMENTS

The present invention relates to disposable absorbent articles such as sanitary napkins, and in particular to sanitary napkins having a flexure-resistant deformation element and a convex upward configured body surface when worn.

As used herein, the term "disposable absorbent article" refers to articles which absorb and contain body exudates and more specifically refers to articles which are placed against or in proximity to the body of a wearer to absorb and contain the various exudates which are discharged from the body (e.g., blood, menses, urine) and which are intended to be discarded after a single use (i.e., they are not intended to be laundered or otherwise restored or reused). A preferred embodiment of the disposable absorbent article of the present invention is shown in Figures 1 through 5 as it would be used in a sanitary napkin 10. As used herein, the term "sanitary napkin" refers to an article which is worn by females adjacent to the pudendal region and which is intended to absorb and contain menstrual fluids and other vaginal discharges. Interlabial devices which reside partially within the wearer's vestibule are also within the scope of this invention. As used herein, the term "pudendal" refers to the externally visible female genitalia and is limited to the labia majora, the labia minora, the clitoris and the vestibule.

As can be seen in Figures 1 through 5, a preferred sanitary napkin 10 basically comprises a deformation element 20 and an absorbent means 39. The absorbent means 39 may be any means which is generally compressible, conformable, non-irritating to the wearer's skin and capable of absorbing and containing liquids and certain body exudates such as menses, blood and urine. If the absorbent means 39 is comprised of more than one constituent part or material, one part or material of the absorbent means 39 may not be absorbent or liquid permeable, so long as the combination of parts or materials has some degree of absorbency and some degree of the properties set forth above. The absorbent means 39 has a first major surface 91 and a second major surface 92. In the preferred embodiment illustrated, the deformation element 20 serves as the liquid impermeable backing

for the sanitary napkin 10 and has a body facing surface 16, a bottom surface 17, and a periphery 33 which comprises the element side edges 31 and the element end edges 32. In the preferred embodiment shown in Figures 1 through 5, the absorbent means 39 is superimposed on the deformation element 20 such that the second major surface 92 of the absorbent means 39 is adjacent to the body facing surface 16 of the deformation element 20. Further, in the preferred embodiment shown in Figures 1 through 5, the absorbent means 39 comprises an absorbent core 40 and a liquid permeable topsheet 45. The absorbent core 40 has a first major surface 43, a second major surface 44, core side edges 41 and core end edges 42. The absorbent core 40 is superimposed on the deformation element 20 such that the second major surface 44 of the absorbent core 40 is adjacent to the body facing surface 16 of the deformation element 20. The topsheet 45 overlays the first major surface 43 of the absorbent core 40.

The sanitary napkin 10 has a liquid receiving body surface 13 which is generally defined by the topsheet 45 and a garment surface 14 which is generally defined by the bottom surface 17 of the deformation element 20. Preferably the topsheet 45 and the deformation element 20 have length and width dimensions generally larger than the absorbent core 40 so that they extend beyond the core side edges 41 and the core end edges 42 of the absorbent core 40 where they are associated together in a suitable manner. As used herein, the term "associated" encompasses configurations whereby a first member is directly joined to a second member and configurations whereby a first member is indirectly joined to a second member by affixing the first member to intermediate members which in turn are affixed to the second member. The extension of the topsheet 45 and/or the deformation element 20 beyond the core side edges 41 and the core end edges 42 of the absorbent core 40 forms the longitudinal side edges 11 and the end edges 12, respectively, of the sanitary napkin 10. The longitudinal side edges 11 and the end edges 12 of the sanitary napkin 10 comprise the periphery 15 of the sanitary napkin 10.

Looking at some of the members of the sanitary napkin 10 more specifically, the topsheet 45 is positioned adjacent the first major surface 43 of the absorbent core 40 and overlays a major portion of the absorbent core 40 so that when exudates are discharged onto the topsheet 45 they will transfer from the body surface 13 of the topsheet 45 to the absorbent core 40 where they are absorbed by the absorbent core 40. The topsheet 45 extends outwardly toward the edges of the absorbent core 40 so that a major portion of the absorbent core 40 is disposed between the topsheet 45 and the deformation element 20. In the preferred embodiment shown in Figures 1 through 5, the topsheet 45 has length and width dimensions generally larger than those of the absorbent core 40.

The topsheet 45 is compliant, soft feeling, and non-irritating to the wearer's skin. Further, the topsheet 45 is liquid pervious, permitting liquids to readily transfer through its thickness. A suitable topsheet 45 may be manufactured from a wide range of materials such as formed thermoplastic films, apertured plastic films, porous foams, reticulated foams, natural fibers (e.g., wood or cotton fibers), synthetic fibers (e.g., polyester or polypropylene fibers) or from a combination of natural and synthetic fibers, with formed films being preferred. Formed films are preferred for the topsheet 45 because they are pervious to liquids and yet non-absorbent. Thus, the surface of the formed film, which is in contact with the body, remains dry, thereby reducing body soiling and creating a more comfortable feel for the wearer. Suitable formed films are described in U.S. Patent No. 3,929,135, entitled "Absorptive Structure Having Tapered Capillaries", which patent issued to Thompson on December 30, 1975, U.S. Patent No. 4,324,246, entitled "Disposable Absorbent Article Having A Stain Resistant Topsheet", which patent issued to Mullane and Smith on April 13, 1982, U.S. Patent No. 4,342,314, entitled "Resilient Plastic Web Exhibiting Fiber-Like Properties", which patent issued to Radel and Thompson on August 3, 1982, and U.S. Patent No. 4,463,045, entitled "Macroscopically Expanded Three-Dimensional Plastic Web Exhibiting Non-Glossy Visible Surface and Cloth-Like

Tactile Impression", which patent issued to Ahr, Louis, Mullane, and Ouellete on July 31, 1984, all of which patents are incorporated herein by reference.

In a preferred embodiment of the present invention, the body surface 13 of the topsheet 45 is hydrophilic. The hydrophilic body surface 13 helps liquid to transfer through the topsheet 45 faster than if the body surface 13 was not hydrophilic. This diminishes the likelihood that menstrual fluid will flow off the topsheet 45 rather than being absorbed by the absorbent core 40. In a preferred embodiment, the body surface 13 of the topsheet 45 is made hydrophilic by treating the body surface 13 with a surfactant. It is preferred that the surfactant be substantially evenly and completely distributed throughout the body surface 13 of the topsheet 45. This can be accomplished by any of the common techniques well known to those skilled in the art. For example, the surfactant can be applied to the topsheet 45 by spraying, by padding or by the use of transfer rolls.

In addition, in a preferred embodiment, as illustrated in Figure 1, the topsheet 45 may advantageously be provided with a target acquisition zone 46. As shown in Figure 1, the zone 46 has larger openings and a greater percentage of open area than the remaining regions of the topsheet 45. The zone 46 serves two purposes. First, the larger openings and greater open area provide quicker acquisition of fluid gushes which are often experienced when a woman rises from having been seated or lying, whereas blood and menses have accumulated in the vaginal canal or vestibule. Second, the larger openings of the zone 46, as compared to the rest of the topsheet 45, provide more complete acquisition of the sometimes highly viscous menses. Without the zone 46, less absorption of exudates may take place and the unabsorbed exudates may lay in contact with the body and cause irritation or they may flow to the edges 11 and 12 of the sanitary napkin 10 and cause soiling. The zone 46 can be positioned anywhere on the topsheet 45 and can have any shape. The zone 46 can be as small as proper functioning will allow or almost as large as the topsheet 45, itself. However, because the larger openings of the zone 46 may not prevent rewet as well as the rest

of the topsheet 45, the zone 46 preferably has an area great enough to be in contact with the menses as it exits the vestibule yet not so large as to contact surrounding skin surfaces which could be soiled or irritated by rewet. Preferably, as shown in Figure 1, the zone 46 is positioned on the topsheet 45 in an area where menses will contact the zone 46 first before contacting the rest of the topsheet 45. This area is preferably disposed beneath the vestibule and more preferably beneath the vaginal orifice. In the preferred embodiment of the topsheet 45 shown in Figure 1, the target acquisition zone 46 is symmetrically located on the topsheet 45 due to the fact that the preferred embodiment of the napkin 10 shown is symmetrically designed so that the napkin 10 and the target acquisition zone 46 will function properly, when worn, no matter which direction the napkin 10 is worn.

As seen in Figure 1, the perimeter of the target acquisition zone 46 is defined by an inner perimeter region 47. In the preferred embodiment shown, the inner perimeter region 47 is impervious. The inner perimeter region 47 may be formed by thermomolding a polymeric topsheet 45 to a polymeric fiber absorbent core 40 or by gluing a topsheet 45 to a fluff pulp absorbent core 40. The inner perimeter region 47 is not primarily intended for the function of defining the outer perimeter of the zone 46, but, instead is intended to hold the topsheet 45 in contact with the absorbent core 40 so that the topsheet 45 will not shift or roll, and also so that the absorbent core 40 will stay in place and have better integrity. Further, the inner perimeter region 47 may not be liquid impervious but will function equally well if it is liquid pervious. In the preferred embodiment shown in Figure 1, the configuration of the inner perimeter region 47 is made to correspond to the outline of the protuberance 71 of the deformation element 20, which will be explained in more detail later in this specification. The inner perimeter region 47 creates a slight trough around the zone 46 causing the zone 46 to have a somewhat pillowing effect. In an alternative embodiment of the napkin 10, the deformation element 20 has dimples in regions which correspond to the inner perimeter region 47 and which extend through the absorbent core 40, in which case the topsheet 45 is thermomolded or glued directly to the dimples.

The absorbent core 40 may be any means which is generally compressible, conformable, non-irritating to the wearer's skin, and capable of absorbing and containing liquids and certain body exudates. The absorbent core 40 may be manufactured in a wide variety of sizes and shapes (e.g., rectangular, hourglass, etc.) and from a wide variety of liquid absorbent materials commonly used in disposable sanitary napkins, diapers and other absorbent articles, such as comminuted wood pulp which is generally referred to as airfelt and which is preferred. Examples of other suitable absorbent materials include creped cellulose wadding, absorbent foams, absorbent sponges, super absorbent polymers, absorbent hydrogel materials, polymeric fibers, or any equivalent materials or combinations of materials. The total absorbent capacity of the absorbent core 40 should, however, be compatible with the design exudate loading for the intended use of the absorbent article. Further, the size and absorbent capacity of the absorbent core 40 may be varied to accommodate wearer's ranging in size and also ranging in the expected amount of exudate fluid volume. For instance, a different absorbent capacity may be utilized for sanitary napkins intended for daytime use as compared with those intended for nighttime use or for sanitary napkins intended for use by teenage females as compared with those intended for use by more mature women.

A preferred embodiment of the sanitary napkin 10 has a generally rectangular shaped absorbent core 40 having rounded end edges 42 and is intended to be worn by generally all females. The absorbent core 40 is preferably a batt of airfelt having a laminate of hydrogel forming material 37 adjacent to and underlaying the airfelt fibers. Suitable hydrogel forming materials are disclosed in U.S. Patent 4,654,039, entitled "Hydrogel-Forming Polymer Compositions For Use In Absorbent Structures", which patent issued to Brandt, Goldman and Inglin on March 31, 1987. Preferably, the batt of airfelt is about 6.0 centimeters wide (lateral dimension) and about 19.0 centimeters long (longitudinal dimension). The absorbent core 40 has a generally uniform caliper of about 4.6 millimeters, an absorbent capacity of from about 4.0 grams to about 10.0 grams of water per gram of absorbent material and a density of about 0.1 grams per cubic centimeter. It should be understood, however, that

the size, shape, configuration, and total absorbent capacity of the absorbent core 40 may be varied to accommodate wearer's ranging in size and expected fluid flow. Therefore, the dimensions, shape, and configuration of the absorbent core 40 may be varied (e.g., the absorbent core may have a varying caliper or a hydrophilic gradient).

The deformation element 20 is flexure-resistant. As used herein, the term "flexure-resistant" refers to an element which will support a bending moment, in contrast to an element which will support only axial forces. The deformation element 20 of the present invention has a preference for having a convex upward configuration when the napkin 10 is subjected to lateral compressive forces 100, when worn. Preferably, the deformation element 20 of the present invention will have a convex upward configuration when the sanitary napkin 10 is worn by different females wearing the same designed napkin 10 for a period of fifteen minutes in at least seventy of one-hundred trials. In some configurations of the element 20, the wearer may have to initially manipulate the element 20 into a convex upward configuration either prior to or just after placement of the napkin 10 to the wearer's body. Preferably, the deformation element 20 is manufactured from a moldable substance. More preferably the element 20 is manufactured from a thermomoldable substance, and most preferably a radiation cross-linked polyethylene foam. Such a foam is manufactured by Voltek, Inc. of Lawrence, Massachusetts, and marketed in the trade as Voltek Volara Type 2A. Another suitable foam is a thermomoldable cross-linked closed cell polyolefin which is manufactured by Dynamit Nobel of America, Inc. of South Holland, Illinois, and marketed in the trade as Dynamit Nobel Trocellen Type XJV400. A preferred deformation element 20 has a caliper of from about 1.25 to about 2.5 millimeters and more preferably from about 1.75 to about 2.0 millimeters. A preferred element 20 is formed from a polyethylene foam sheet which is subsequently subjected to molding by a known thermomolding process. The sheet is subjected to thermomolding at a temperature of from about 110°C to about 205°C to form the element 20. Other suitable foams are made from such substances as polyethylene, polypropylene, polyester, polybutylene, ethylene vinyl acetate, polyurethane,

thermobondable cellulose, latex, silicone elastomerics and others. However, the element 20 need not be made of foam. Alternatively, the element 20 could be made of fibers, films or sheets of cellulose, rayon, nylon, polyester, stiffened cotton, polyethylene, vinyl acetate, latex, rubber, plastic, heavy-weight paper such as cardboard, coated paper, or a combination or laminate of these or other materials. Further, if the element 20 is susceptible to being wetted when worn, then the element 20 must be moisture stable. In other words, elements which are susceptible to wetting when worn and are not moisture stable, but instead are moisture unstable, are not within the scope of the present invention. As used herein, the term "moisture unstable" refers to materials which are held together solely by hydrogen bonds and/or fibrous structures comprised of short fibers having a length of 10.0 millimeters or less which are held together by mechanical entanglement and frictional forces. An example of a material which is held together solely be hydrogen bonds is standard toilet tissue which is a slurry of wood pulp laid on a screen and subjected to drying. An example of a material which is held together by mechanical entanglement and frictional forces is short-fiber fluff pulp which is air-laid and then compressed or densified to promote interfiber entanglement. Conversely, if a material is bonded at least partially through means other than hydrogen or short-fiber mechanical entanglement and frictional forces, then the material is moisture stable. Examples include short wood pulp fibers which are adhesively held together, foams having chemical bonds other than just hydrogen, long synthetic fibers suitably blended with short-fiber wood pulp and others. The reason that the element 20 must be moisture stable is that in order for the element 20 to provide continuing benefit when worn and soiled, the element 20 should maintain a functional degree of flexure-resistance throughout a normal wearing time. While it is true that many moisture unstable elements form up nicely into a convex upward configuration and have flexural-resistance prior to or shortly after being worn, when these elements are subjected to perspiration, water, menses or urine in the presence of wearing flexures, their hydrogen or mechanical frictional bonds deteriorate and the element loses a large part, if not all, of its flexure-resistance and, therefore, its usefulness.

Of course, a number of ingenious embodiments of the present invention exist in which the deformation element 20 does not consist solely of a single homogenous material. For example, the element 20 may be comprised of fluff pulp having unbonded regions and selected adhesively bonded regions which impart to the element 20 a flexure-resistance. Alternatively, the element 20 may be comprised of fluff pulp having thin strips or a lattice of foam material dispersed throughout the fluff pulp to provide flexure-resistance. Also, for example, the element 20 may be a polymeric sheet having a stiffening grid bonded to it to provide flexure-resistance. In such cases where the element 20 is a combination of materials, if it is necessary to test the flexure-resistance of the element 20 by the Circular Bend Procedure, as explained below, then each constituent part should be tested individually, if feasible, and also the combination of materials should be tested as a whole.

Preferably, the element 20 has a flexure-resistance measured by peak bending stiffness of at least about 100.0 grams. More preferably, the deformation element 20 has a peak bending stiffness of greater than about 200.0 grams, and most preferably greater than about 350.0 grams. Depending on the element's 20 design, peak bending stiffnesses of greater than 500.0 grams have been found acceptable. As an element increases in flexure-resistance, it generally maintains its shape better, but it also generally becomes more uncomfortable and increases wearing awareness.

Peak bending stiffness is determined by a test which is modeled after the ASTM D 4032-82 CIRCULAR BEND PROCEDURE, the procedure being considerably modified and performed as follows. The circular bend procedure is a simultaneous multi-directional deformation of a material in which one face of a specimen becomes concave and the other face becomes convex. The circular bend procedure gives a force value related to flexure-resistance, simultaneously averaging stiffness in all directions.

APPARATUS:

The apparatus necessary for the CIRCULAR BEND PROCEDURE is a modified Circular Bend Stiffness Tester, having the following parts:

Two smooth-polished steel plate platforms which are 102.0 x 102.0 x 6.35 millimeters, one having an 18.75 millimeter diameter orifice and the other having a 31.75 millimeter diameter orifice. The lap edge of each orifice should be at a 45 degree angle to a depth of 4.75 millimeters.

A plunger having an overall length of 72.2 millimeters, a diameter of 6.25 millimeters, a ball nose having a radius of 2.97 millimeters and a needle-point extending 0.88 millimeter therefrom having a 0.33 millimeter base diameter and a point having a radius of less than 0.5 millimeter, the plunger being mounted concentric with the orifice and having equal clearance on all sides. Note that the needle-point is merely to prevent lateral movement of the test specimen during testing. Therefore, if the needle-point significantly adversely affects the test specimen (for example, punctures an inflatable structure), then the needle-point should not be used. The bottom of the plunger should be set well above the top of the orifice plate. From this position, the downward stroke of the ball nose is to the exact bottom of the plate orifice.

A force-measurement gauge, and more specifically an Instron inverted compression load cell. The load cell has a load range from about 0.0 to about 2000.0 grams.

An actuator, and more specifically the Instron Model No. 1122 having an inverted compression

load cell. The Instron 1122 is made by the Instron Engineering Corporation, Canton, Massachusetts.

NUMBER AND PREPARATION OF SPECIMENS

In order to perform the procedure for this test, as explained below, five representative absorbent articles are necessary. From each absorbent article, the element to be tested is removed. In articles where the deformation element 20 is a combination of materials, as earlier explained, each constituent part should be tested separately, if feasible, and also, the element should be tested as a whole. From one of the five elements to be tested, some number "Y" of 37.5 x 37.5 millimeter test specimens are cut. If any portion of the element meets the parameters of this test, then the element as a whole satisfies the test. Therefore, a number of different specimens should be tested from each element. Certainly, the structurally most rigid portion of the element should be tested. Preferably, a test specimen is cut from a portion of the element which has a convex upward configuration, as later described. There may be portions of the elements which are not 37.5 x 37.5 millimeters. In such a case, the largest available specimen of the element should be tested. The test specimens should not be folded or bent by the test person and the handling of specimens must be kept to a minimum and to the edges to avoid affecting flexural-resistance properties. From the four remaining elements, an equal number "Y" of 37.5 x 37.5 millimeter specimens identical to the specimens cut from the first element are cut. Thus, the test person should have "Y" number of sets of five identical specimens.

PROCEDURE

The procedure for the CIRCULAR BEND PROCEDURE is as follows. The specimens are conditioned by leaving them in a room which is 21 ± 1°C and 50 ± 2% relative

humidity for a period of two hours. It has been recognized that specimens having an uncompressed optical caliper of 6.35 millimeters or greater tend to bunch up in the 18.75 millimeter test plate orifice and thereby give readings which are more related to the specimen's compression resistance rather than the specimen's flexure-resistance. Thus, specimens having an uncompressed optical caliper of 6.35 millimeters or greater should be tested using the test plate having the orifice of 31.75 millimeters. Whichever plate is used, the test procedure and calculations remain the same and the preferred flexure-resistances previously given also remain the same. The tester plate is leveled. The plunger speed is set at 50.0 centimeters per minute per full stroke length. A specimen is centered on the orifice platform below the plunger such that the body facing surface 16 of the specimen is facing the plunger and the bottom surface 17 of the specimen is facing the platform. The indicator zero is checked and adjusted, if necessary. The plunger is actuated. Touching the specimen during the testing should be avoided. The maximum force reading to the nearest gram is recorded. The above steps are repeated until all five of the specimens have been tested.

CALCULATION

The peak bending stiffness for each specimen is the maximum force reading for that specimen. Remember that "Y" number of sets of five identical specimens were cut. Each set of five identical specimens are tested and the five values received are averaged. Thus, the test person now has an average value for each of the "Y" sets tested. Remember, if any portion of the element satisfies this test, then the element as a whole satisfies the test. Therefore, the flexure-resistance for a particularly designed element is the greatest of these average peak bending stiffnesses.

In the preferred embodiment of the sanitary napkin 10 shown in Figures 1 through 5, the deformation element 20 is positioned such that the body facing surface 16 of the deformation element 20 is adjacent to the second major surface 44 of the absorbent core 40. In the preferred embodiment, the deformation element 20 is substantially liquid impermeable and serves as the liquid impermeable backing of the sanitary napkin 10. The deformation element 20 underlays a major portion of the absorbent core 40 so that exudates which are absorbed by and contained within the absorbent core 40 are prevented from soiling adjacent garments and linens. In the preferred embodiment, the deformation element 20 has length and width dimensions generally larger than the absorbent core 40 so that the deformation element 20 extends beyond the core side edges 41 and the core end edges 42 to the longitudinal side edges 11 and the end edges 12, respectively, of the napkin 10.

In a preferred embodiment, the foam element 20 has a closed-cell construction on its body facing surface 16 so that it is non-absorbent. However, the foam element 20 may be of an open-cell construction on its body facing surface 16 so that it is absorbent. However, when the foam element 20 is used as the liquid impermeable backing of the sanitary napkin 10, the element 20 should be substantially liquid impermeable.

A preferred deformation element 20 of the sanitary napkin 10 shown in Figures 1 through 5 is shown in Figures 6 through 8. In the preferred embodiment, the element 20 has a length of about 20.5 centimeters, a width of about 8.0 centimeters and a generally uniform caliper of about 2.0 millimeters, except for the flexure hinges 23A, 23B and 23C which have a caliper of about 1.25 millimeters. In a preferred embodiment, the deformation element 20 has a means 23 for inducing the body surface 13 of the napkin 10 to have a convex upward configuration when the sanitary napkin 10 is subjected to lateral compressive forces 100 when worn. There are a number of possible means 23. A preferred means 23 are the flexure hinges 23A, 23B and 23C

which are provided in the element 20 as shown in Figures 6 through 8. A flexure hinge initiates deformational development of preconceived geometric configurations of the element 20. A flexure hinge creates different bend-resistances across the width of the deformation element 20. The difference in bend-resistance can be created by geometric discontinuities in the element 20 as by pre-set folds, scoring, indentations, perforations, or fairly abrupt changes in elevation. The difference can also be created by changes in bend-resistance across the width of the element 20 due to changes in material properties of the element 20 as by localized compaction or by the combination of different materials across the width of the element 20, wherein the materials have different flexure-resistances. In a preferred embodiment, the flexure hinges 23A, 23B and 23C induce the deformation element to have a convex upward configuration when the napkin 10 is worn. The convex upward configuration of the element 20 causes the absorbent core 40 and the topsheet 45 to also have a convex upward configuration, and consequently, the body surface 13 of the napkin 10 has a convex upward configuration when worn.

The preferred embodiment of the element 20 shown in Figures 6 through 8 has a linear central hinge 23A, a pair of curvilinear thigh hinges 23B, and a pair of curvilinear protuberance hinges 23C, all of which are of the geometric discontinuous type and all of which have been thermomolded into the element 20. From each element side edge 31, the element 20 slopes inwards and downwards to form walls 72 having bases 74 which are adjacent to the curvilinear thigh hinges 23B. The walls 72 comprise that portion of the element 20 between the thigh hinges 23B and the element side edges 31. The walls 72 have a pudendal facing surface 73. Figures 6 and 7 illustrate that the thigh hinges 23B extend generally longitudinally and curve inward from the element side edges 31 so as to approximate the curvature of a wearer's thighs. In other words, the thigh hinges 23B are arcuate, wherein the midpoint of the arc is the greatest distance from the element side edges 31. The thigh hinges 23B have a generally "U" shaped cross-section as shown in Figure 8. Adjacent to the longitudinal midpoint of the thigh hinges 23B are the curvilinear protuberance hinges 23C which serve to define the

perimeter of the protuberance 71 of the element 20 as shown in Figures 6 and 7. The protuberance hinges 23C are arcuate wherein the midpoint of the arc is the greatest distance from the longitudinal axis 90. The protuberance hinges 23C are formed into the element 20 as a result of the thermomolding formation of the protuberance 71. Thus, as shown in Figure 8, the protuberance hinges 23C are the result of a fairly abrupt change in elevation across the element 20. As shown in Figure 8, from the protuberance hinges 23C the element 20 curvilinearly slopes upward to the linear central hinge 23A, thus forming a protuberance 71. The protuberance 71 is provided to promote and initiate some of the desired bending deformations of the element 20 and, in particular, the protuberance 71 predisposes the element 20 to bend in such a way that the body facing surface 16 of the element 20 will have a convex upward configuration when the napkin 10 is subjected to lateral compressive forces 100 when worn, as will be later explained. Of course, the protuberance 71 need not be provided and, in fact, the element 20 can be planar or downwardly cup shaped. However, such configurations might require a more complex design that might require more compressive force and more mechanical action in order to create a convex upward configuration. Thus, the element 20 is provided with a protuberance 71. The protuberance 71 causes the absorbent core 40 and the topsheet 45, and specifically the body surface 13 of the napkin 10 to have a pre-formed convex upward configuration. Thus, the body surface 13 need only maintain a convex upward configuration when the napkin 10 is subjected to lateral compressive forces 100, when worn, in contrast to a body surface 13 that has a planar or downwardly cupped shaped when applied but assumes a convex upward configuration when worn. As used herein, the term "maintain" includes embodiments wherein the body surface 13 of the napkin 10 retains the same convex upward configuration that it had prior to the application of lateral compressive forces 100 when worn and embodiments wherein the body surface 13 assumes a different convex upward configuration than it had prior to the application of lateral compressive forces 100 when worn. In addition, recognizing that an object of the present invention is to put the body surface 13 of the napkin 10 in intimate contact with the external surfaces of the labia majora

when worn, the protuberance 71 gives the element 20 and, consequently the napkin 10, some pre-formed elevation to aid in providing such intimate contact. As seen in Figures 6 and 7, the central hinge 23A extends longitudinally along the longitudinal axis 90 of the element 20 nearly from one end edge 32 of the element 20 to the other end edge 32. As shown in Figure 8, the central hinge 23A has a generally inverted "U" shaped cross-section.

The previous description of the sanitary napkin 10 has been directed to the napkin's 10 "at rest" configuration. However, when the sanitary napkin 10 is worn, at least a portion of the body surface 13 of the sanitary napkin 10 must have a convex upward configuration. As used herein, the term "convex upward configuration" includes embodiments wherein at least a portion of the body surface 13 of the napkin 10 has a convex shape.

The presence of a "convex upward configuration" is determined as follows, the following explanation being given with reference to Figures 9 through 11. First, two plungers 200 having a radius of about 76.2 millimeters are positioned symmetrically across from each other so that the midpoints of the faces of the plungers 200 are about 25.4 millimeters apart. The curvature of the plungers 200 is intended to approximate the curvature of the thighs of a representative number of women. The 25.4 millimeters distance is intended to approximate the distance between the thighs of a representative number of women, when standing. A top view of two properly positioned plungers 200 is shown in Figure 10. The plungers 200 have a face 205 height of about 51.0 millimeters, a bottom lip 220 having a width of about 5.0 millimeters and a thickness of about 5.0 millimeters. With the body surface 13 of the napkin to be tested facing up and the garment surface 14 of the napkin facing down, the napkin is placed between the plungers 200 in the shape that the napkin 10 generally has when worn. The napkin may have to be manipulated into its "in use" shape. Often, this "in use" shape can be determined through simple visual observations of females wearing the napkin. If the shape is not determinable through visual observation, at least one feasible alternative that is available is Magnetic Resonance Imaging (MRI). Magnetic

resonance images of females wearing sanitary napkins which have been saturated with mineral oil have been used to give accurate depictions of the shape a sanitary napkin has when worn. As soon as the sanitary napkin is properly positioned between the plungers 200, a cast molding of the sanitary napkin is made. The cast molding is for the purpose of permanently "freezing" the napkin in this "in use" configuration so that the napkin can be further studied. The cast mold can be made from a number of different materials. Preferably, the material that is used will penetrate into the absorbent means. Two materials that have been found suitable are a hard-casting material which is marketed as EnviroTex 1 to 1 Polymer Coating by Environmental Technology, Inc. of Fields Landing, California and a soft-casting material which is a mixture of 46% Velsamid 125 resin which is marketed by the Henkel Corporation of Minneapolis, Minnesota, 31% EPON 812 hardener which is marketed by Polaron Equipment Limited of Watford, Connecticut and 23% 1,1,1 Trichloroethane thinner. The casting material can be poured directly into the napkin if the "in use" configuration is susceptible to such (i.e., for example, boat or cupped shaped). If not, a thin sheet of aluminum foil can be placed around and under the napkin so as to create a receiver for the mixture. The aluminum foil receiver can then be filled so as to submerge the napkin in the casting material. Either way, the napkin should substantially retain its in-use shape. After the casting material has set, any number of lateral cross-sections can be cut along the longitudinal length of the napkin. From these lateral cross-sections, a person can determine whether the napkin has a convex upward configuration by performing the following test, reference being directed to the cast molded lateral cross-section of the napkin 10 shown in Figure 11. While looking directly at a cross-section, if there is a point on the body surface 13 of the napkin 10 that is a surface distance of at least 2.0 centimeters from the outer perimeter of the body surface 13 and that has an elevation of at least about 5.0 millimeters above either outer perimeter of the body surface 13, as per the lateral cross-section shown in Figure 11, then the body surface 13 of the napkin 10 has a convex upward configuration. If there is such a point, the point is preferably at least about 7.5 millimeters above either outer perimeter of the body surface 13. If there is no such point, then starting from

the left outer perimeter of the body surface 13 and moving to the right, the body surface 13 is scanned until an inflection point 50 between a downward slope and an upward slope is found. If there is a first point 51 along the body surface 13 to the right of the inflection point 50 which has an elevation of at least about 4.0 millimeters above the inflection point 50, and a second point 52 along the body surface 13 to the right of the first point 51 which has an elevation below the first point 51 of at least about 4.0 millimeters, as per the lateral cross-section shown in Figure 11, then the body surface 13 of the sanitary napkin 10 has a convex upward configuration. Preferably, the first point 51 has an elevation of at least about 6.0 millimeters about the inflection point 50 and the second point 52 has an elevation of at least about 6.0 millimeters below the first point 51. The body surface 13 must have at least one convex upward configuration but can have more. Preferably, a portion of the body surface 13 of the napkin 10 in the central region 62 will have a convex upward configuration. More preferably, the portion of the body surface 13 of the napkin 10 which is disposed beneath the center of the vaginal orifice when the napkin 10 is worn will have a convex upward configuration. A cross-section of an alternatively preferred sanitary napkin 10 embodiment of the present invention having a body surface 13 having a convex upward configuration is shown in Figure 14. An example of a sanitary napkin 10 not within the scope of the present invention having a body surface 13 but not having a convex upward configuration is shown in Figure 15.

Heretofore, the sanitary napkin 10 and the deformation element 20 have basically been described in their "at rest" (i.e., not worn) configurations. However, because the general population of women have thighs which are too close together not to apply any laterally compressive forces 100 to the napkin 10 when worn, the "at rest" configurations of the napkin 10 and the element 20 will seldom, if ever, be realized when the napkin 10 of the present invention is being worn. Therefore, the following is a description of the different anatomy conforming shapes the sanitary napkin 10 and the deformation element 20 assume along the napkin's 10 length when the sanitary napkin 10 is being worn and thereby subjected to the lateral compressive forces 100 of the

wearer's thighs. In the preferred embodiment of the sanitary napkin 10 illustrated in Figures 1 through 13 and 16 through 20, the absorbent means 39 which is associated with the element 20, generally flexes in cooperation with the deformation element 20. More specifically, the topsheet 45, which is affixed directly to the element 20 in the periphery 15 of the napkin 10, and the absorbent core 40, which is disposed between the topsheet 45 and the element 20, generally flex in cooperation with the element 20. Thus, in the preferred embodiment, the cross-sectional configurations of the napkin 10 along the napkin's 10 longitudinal length, and specifically of the absorbent means 39, which in the preferred embodiment comprises the topsheet 45 and the absorbent core 40, generally mimic the cross-sectional configurations of the deformation element 20. In other embodiments, the cross-sectional configurations of the napkin 10 and the absorbent means 39 may not mimic the cross-sectional configurations of the element 20.

As seen in Figure 12, when a preferred embodiment of the sanitary napkin 10 is subjected to lateral compressive forces 100, as when worn, the napkin 10 assumes a generally hourglass shaped top plan view. The portion of the napkin 10 which lies beneath the pudendum of t wearer between the anterior commissure and the posterior commissure, when worn, is the central region 62. Therefore, when the preferred napkin 10 of the present invention is worn, the central region 62 of the napkin 10 shown in Figure 12 extends from about the line 81 which is disposed beneath the wearer's anterior commissure to about the line 82 which is disposed beneath the wearer's posterior commissure. The distance between the lines 81 and 82 or their relative position on the napkin 10 can vary depending upon the size of the wearer and the positioning of the napkin 10. The portion of the napkin 10 extending forward from about the line 81 to the front end edge 12 is the front region 61. The portion of the napkin 10 extending backward from about the line 82 to the back end edge 12 is the back region 63. Note that when underpants are worn, the front region 61 and the back region 63 shown in Figure 13 may be forced to curve upwards (not shown).

When the preferred embodiment of the napkin 10 shown in Figures 1 through 5, is subjected to lateral compressive forces 100 when worn, the central region 62 of the napkin 10 can assume a number of different cross-sections ranging from its at-rest configuration shown by cross-section in Figure 9 to the in-use configuration shown by cross-section in Figure 16. As seen in Figure 16, when the preferred sanitary napkin 10 is subjected to lateral compressive forces 100 when worn, the napkin 10 and the element 20 assume a generally "W" shaped cross-section in the central region 62. As seen in Figure 16, the element walls 72 have assumed a substantially vertical position. The element side edges 34 remain adjacent to the element walls 72, but are now displaced to a position above the element walls 72 and into the uppermost part of the wearer's legs at the crotch where there is minimum movement and the least cause for irritation. The bases 74 of the element walls 72 are adjacent to the thigh hinges 23B. The thigh hinges 23B are provided to allow the element walls 72 to bend about the thigh hinges 23B, thereby assuming a substantially vertical position. Valleys 67 are formed above and around where the bases 74 of the element walls 72 meet the thigh hinges 23B. The valleys 67 are particularly useful in diffusing exudates lengthwise to better utilize the total absorbent capacity of the napkin 10. From the thigh hinges 23B to the protuberance hinges 23C the element 20 slopes inwards and downwards. Between the protuberance hinges 23C, the element 20, and particularly the protuberance 71, has a convex upward configuration and more particularly a generally inverted "U" shaped cross-section. In the preferrred embodiment, the convex upward configuration is generally symmetrically located between the longitudinal side edges 11. The linear central hinge 23A is generally symmetrically located between the protuberance hinges 23C, along the longitudinal centerline 90 and along the apex of the convex upward configuration. Further, as seen in Figure 16, the absorbent means 39 and particularly the absorbent core 40, the topsheet 45 and the body surface 13 of the napkin 10 have a generally "W" shaped cross-section in the central region 62. The movement of the element walls 72 from substantially planar to substantially vertical causes the absorbent core 40 and the topsheet 45 to bend, thus forming the walls 77 of the napkin 10. The walls 77 have bases 75. Between the walls 77, the absorbent

means 39 flexes over the protuberance 71 of the element 20 so as to have a generally inverted "U" shaped cross-section having a convex upward configured body surface 13. The convex upward generally inverted "U" shaped body surface 13 of the napkin 10 between the walls 77 in combination with the pudendal surface 78 of the walls 77 present a generally "W" shaped body surface 13 of the napkin 10. In the preferred embodiment shown, the "W" shaped cross-sections are symmetrical. Valleys 79 are formed above and around where the body surface 13 between the walls 77 meets the pudendal surfaces 78 of the walls 77. The valleys 79 are particularly useful in diffusing exudates lengthwise to better utilize the total absorbent capacity of the napkin 10.

Before the body surface 13 of the napkin can deform into the shape depicted in Figure 16, the body surface's 13 upward movement may be impeded if the body surface 13 of the napkin 10 makes intimate contact with the wearer's pudendal region, and more specifically the external surfaces of the labia majora. If such occurs, the body surface 13 of the napkin 10, the absorbent core 40 and the protuberance 71 of the element 20 will deform, and more specifically in a preferred embodiment, spread or bulge outwards. A compraison of Figures 16 and 20 illustrates how, in a preferred embodiment, the body surface 13 of the napkin 10, the absorbent core 40 and the protuberance 71 of the element 20 deform when the body surface's 13 upward movement is restricted by the external surfaces of the pudendal region.

Referring again to Figure 12, it isseen that the major portion of the front region 61 is generally circular when viewed from above the body surface 13. The front region 61 remains generally circular because it is located beyond the thighs and is, therefore, not directly affected by the lateral compressive forces 100 which are exerted by the wearer's thighs. However, the region 61 is indirectly affected by the compressive forces 100 of the wearer's thighs and, in consequence thereof, assumes some anatomy conforming shapes. In a preferred embodiment, the front region 61 of the element 20 has an upwards opening cup shape when the napkin 10 is worn. Because, in the preferred embodiment shown and described, the absorbent core 40 and the topsheet 45 generally move in cooperation with the element 20, the

napkin 10 consequently has an upwards opening cup shape in the front region 61 when the napkin 10 is worn. This shape is depicted by cross-section in Figure 17. The curved end edge 32 of the element 20 in the front region 61 along with the flexure hinges 23A, 23B, and 23C of the element 20 facilitate the formation of this cup shape.

In the preferred embodiment shown, the back region 63, like the front region 61, also assumes some anatomy conforming cross-sections when the napkin 10 is worn. However, in order to adapt to the different shapes of the anatomy in the buttocks region of the wearer, the cross-sections are very different from those in the front region 61. In a preferred embodiment, as shown in Figures 18 and 19, the back region 63 is configured to fit the gluteal groove of a wearer when the napkin 10 is worn. In the back region 63, the body surface 13 of the napkin 10 has a convex upward configuration. In the preferred embodiment, the back region 63 of the napkin 10 has a convex upward cross-section. The cross-section of the back region 63 best depicting this shape is shown in Figure 18. As seen in the side view of the napkin 10 shown in Figure 13 and in the cross-sections shown in Figures 18 and 19, the apex of the convex upward configured body surface 13 in the central region 62, remains the apex into the back region 63 but slopes slightly downward. Since the napkin 10 will in all probability be worn with an undergarment, such as panties, the upward forces of the undergarment preferably will cause the back region 63 and the rearward part of the central region 62 to curve upwards and follow the curve of the buttocks. The back region 63 has a ridge 70 which is configured to fit the gluteal groove of the wearer, when worn. In the preferred embodiment shown, the ridge 70 is along the apex of the convex upward configuration in the back region 63. The ridge 70 is generally symmetrically located between the longitudinal side edges 11 of the napkin 10 along the longitudinal centerline 90. The ridge 70 fits the gluteal groove of the buttocks to provide stability against sideward shifting of the napkin 10. Because the depth of the gluteal groove varies as it moves from the anus towards the wearer's back, the back region 63 of the element 20 is designed so that it flattens out somewhat and the ridge 70 becomes less pronounced as the ridge 70 nears

the end edge 12 of the back region 63. This change in formation is evidence by a comparison of Figure 18, which is a cross-section through the back region 63, with Figure 19, which is also a cross-section through the back region 63 but which is located more towards the end edge 12 of the back region 63.

Basically, without intending to limit the scope of the sanitary napkin 10 and the deformation element 20 of the present invention as shown in Figures 1 through 13 and 16 through 20, the present invention is intended to function and provide the benefits as follows. The following is a description of only one means of progressive deformation of the napkin 10 and it should be recognized that other means are available. The napkin 10 is placed in the wearer's panties or directly adjacent to the wearer's crotch area so that the body surface 13 of the napkin 10 is facing and generally adjacent to the pudendal region. When the wearer brings her thighs together, compressive forces 100 are exerted on the longitudinal side edges 11, which in the preferred embodiment described and shown are synonymous with the element side edges 31, causing the element side edges 31 in the central region 62 to be forced inwards. This inward movement of the element side edges 31 consequently causes the element walls 72 to bend about the thigh hinges 23B of the element 20 and thereby assume a substantially vertical position. As previously described, the movement of the element walls 72 to a substantially vertical position causes the absorbent core 40 and the topsheet 45 to bend and thereby form the walls 77 of the napkin 10. As the napkin 10 is further compressed, the now substantially vertical standing walls 72 of the element 20 are displaced inwards towards the longitudinal axis 90. As the element walls 72 are displaced inwards, the thigh hinges 23B, which are now at the base 74 of the element walls 72, are also displaced inwards. Because the protuberance 71 of the element 20 is above the thigh hinges 23B, the thigh hinges 23B move beneath the protuberance 71, causing the protuberance 71 to flex while bending about the protuberance hinges 23C and the central hinge 23A. As the protuberance 71 of the element 20 flexes, the absorbent core 40 and the topsheet 45 which are superimposed over the protuberance 71 also flex. Thus, as seen in Figure 16, the body surface 13 of the napkin 10, and

particularly that portion of the body surface 13 which is superimposed over the protuberance 71 of the element 20, has a convex upward configuration, and more specifically, an inverted "U" shaped configuration. In addition, that portion of the body surface 13 having a convex upward configuration, in conjunction with the pudendal surface 78 of the walls 77, present a generally "W" shaped configuration. However, as mentioned previously, before the napkin 10 can assume the shape shown in Figure 16, the body surface 13 of the napkin 10 may make intimate contact with the external surfaces of the pudendal region, thereby causing the body surface 13, the absorbent core 40 and the protuberance 71 of the deformation element 20 to bulge outwards as shown in Figure 20. Because the element 20 is flexure-resistant, the element 20 and particularly the protuberance 71 provides an outwardly directed biasing force against the downwardly distributed forces 500 of the wearer's pudendal region. Preferably, this biasing force creates a pressure promoted seal between the external surfaces of the labia majora and the body surface 13 of the napkin 10 which is superimposed over the protuberance 71. Generally, enough lateral compressive forces 100 are provided by the wearer's thighs to put the body surface 13 of the napkin 10 in intimate contact with the external surfaces of the pudendal region, thereby causing the protuberance 71 to spread or bulge and create a biasing force which thereby seals the body surface 13 of the napkin 10 against the labia majora.

As the central region 62 of the napkin 10 and the deformation element 20 are deforming, the front region 61 of the napkin 10 and the deformation element 20 are simultaneously deforming into an upwards opening cup shape. The cup shaped front region 61 serves important functions. First, many women are concerned with the unobtrusiveness of their sanitary napkins when they are standing or laying on their backs since these are the positions when their forward groin area is most openly exposed. Coincidentally, these are also positions in which the wearer's thighs are exerting lateral compressive forces 100 on the napkin 10 and, in response thereto, the front region 61 of the element 20 is curving upwards. Therefore, rather than trying to remain flat and resist the forces of undergarments, the napkin 10

of the present invention is already curving upwards around the wearer's mons pubis and therefore cooperates with the forces of the undergarments so as to remain as unobtrusive as possible. Second, when an absorbent means 39 is placed in the front region 61 of the element 20 in such a way that the absorbent means 39 takes on the upward cupped-shape of the deformation element's 20 front region 61, certain other benefits are realized. For instance, it is likely that unabsorbed exudates will flow across the topsheet 45 and gravitate down along the convex upwards configuration of the body surface 13 of the central region 62 to the front region 61. The cup-like shape of the front region 61, which preferably has its edge surface 12 in sealing engagement with the wearer's skin surfaces due to the upward pressure of the wearer's undergarments, provides an excellent retention area for the exudates until they can be absorbed by the absorbent means 39 or until the napkin 10 is discarded. In addition, the front region 61 may funnel the exudates back towards the valleys 67 and 79 in the central region 62, which is an area even less likely to cause soiling due to the protection provided by the vertically standing walls 77 and 72 of the napkin 10 and the deformation element 20, respectively. Second, when a woman is lying on her stomach, menses may flow out of the vaginal orifice and along the surfaces of the labia minora where it may drip or continue to flow onto the mons pubis. The cup shape of the front region 61 forms a receiver which is ideal for catching and containing such drips and flows. Further, because the end edge 12 of the front region 61 is preferably in sealing engagement with the wearers skin, any menses flowing along the skin will contact and be absorbed by, or at least contained by, the end edge 12 before it can leak beyond the end edge 12 of the napkin 10 and soil undergarments or linens.

While the central region 62 and the front region 61 of the napkin 10 are deforming, preferably the back region 63 is simultaneously deforming into some anatomy conforming configurations when the napkin 10 is worn, as shown in Figures 18 and 19. As the lateral compressive forces 100 of the thighs press inward against the walls 77 of the napkin 10, the back region 63 of the element 20 begins to bend downwards about the central hinge 23A. The forces of the buttocks on the body

surface 13 of the napkin 10 which are transmitted to the deformation element 20 on each side of the central hinge 23A, further facilitate the bending of the element 20 about the central hinge 23A, thereby assuming a convex upward configuration which is configured to fit between the buttocks and into the gluteal groove. Thus, the deformation element 20 assumes a convex upward configuration in the back region 63. Likewise, the absorbent means 39, and specifically the absorbent core 40 and the topsheet 45 bend in cooperation with the deformation element 20 into a convex upward configuration. Resultingly, the body surface 13 of the napkin 10 in the back region 63 has a convex upward configuration. The body surface 13 of the napkin 10 in the back region 63 has a ridge 70 along the apex of the convex upward configuration which is configured to fit the gluteal groove of a wearer. The ridge 70 provides stability against sideward shifting of the napkin 10. The ridge 70 also serves another important function. When a woman lies on her back, as when sleeping, some of the menses may not be deposited directly from the vaginal orifice onto the napkin 10. Instead, the menses may gravitate towards the posterior commissure of the vestibule, following these skin surfaces into the perineal groove, across and around the anus, and into the gluteal groove and the surrounding surfaces of the buttocks where it can soil undergarments and other linens. However, the napkin 10 of the present invention, and especially the back region 63, is designed such that the ridge 70 of the body surface 13 in the back region 63 will preferably be within the gluteal groove, preferably in contact with the wearer's skin surfaces so that any menses flowing along these skin surfaces will contact the ridge 70 and be absorbed into it before coming in contact with undergarments or other linens.

The self-conforming characteristics of the sanitary napkin 10 of the present invention render unnecessary a requirement for independent attachment means for the napkin 10 for some wearers and for some embodiments. The slight biasing force provided by the wearer's undergarments coupled with the outward biasing force of the element 20 against the wearer's thighs will establish a sufficient means for maintaining the sanitary napkin 10 in the desired position. Ideally, attachment directly to the undergarment or body is not required, recognizing that such

attachment may under some circumstances override the more preferred direct association of the napkin 10 solely with the wearer's body; the wearer then facing the possibility that movement of the undergarment relative to the pudendum will translate into some motion within the napkin 10 itself. However, there may be situations where it is desirable to provide some ancillary attachment means. Accordingly, there may optionally be provided an adhesive member for securing the napkin 10 to the undergarments of the wearer. This adhesive member is most preferably a conventional pressure sensitive adhesive bearing a release paper which may be removed to expose the adhesive for purposes of attachment to an undergarment. In this manner, the wearer may exercise the option of attaching the napkin 10 or not as a matter of individual preference. It is noteworthy that even in those instances where the option to secure the napkin 10 to the undergarment is elected, a comparatively small amount of adhesive in a few locations or zones is most preferably provided as opposed to more conventional longitudinal, multiple strips or the like. Because the napkin 10 of the present invention assumes a number of cross-sections along its longitudinal length which are very different from the original configuration of the napkin 10, it is advantageous when determining where to place adhesive to find points on the garment surface 14 of the napkin 10 which retain their relative position with respect to the wearer's undergarment, when worn. Preferred locations for attachment of adhesive for the napkin 10 shown in Figures 1 through 5 are on the bottom surface 17 of the element 20 along a short central length of the thigh hinges 23B and/or an oval patch across the ends 32 of the napkin 10. This approach provides a generally acceptable compromise for those who wish the security of attachment of the napkin 10 to the undergarment while those points of attachment are selected as the least influential relative to the potential contribution to rubbing or chafing occasioned by relative motion between the undergarment (and attached napkin) and the wearer's pudendum.

A number of alternative embodiments of the napkin 10, the deformation element 20 and the means 23 are contemplated within the foregoing description. For example, in an alternatively preferred embodiment of the present invention, the deformation

element 20 is reformable. As used herein, the term "reformable" refers to the ability of an element to return substantially to a configuration the element held prior to the influence of certain external forces. The element may reform because of the influence of other external forces and/or because of the physical properties of the material of which the element is comprised.

In another alternatively preferred embodiment of the present invention, the deformation element 20 is resilient. As used herein, the term "resilient" refers to an element which after the removal of external forces will return substantially to a configuration the element held prior to the influence of external forces, solely because of the physical properties of the material of which the element is comprised. An example will help clarify and differentiate the terms "reformable" and "resilient." Imagine a flat, rectangular shaped object. Now imagine that the object is squeezed from the sides so that its sides are displaced inwards towards each other and its middle bulges up. Now imagine that the squeezing forces are relieved. If the object returns substantially to its original flat, rectangular shape, then the object is resilient. If the object returns substantially to its original flat, rectangular shape only after the influence of some other external force, such as by pressing down on the bulge, then the object is reformable, but not resilient. Thus, a resilient element is necessarily reformable but a reformable element may not be resilient. When a preferred embodiment of the sanitary napkin 10 of the present invention is worn, the external forces which render the deformation element 20 reformable are the lateral compressive forces 100 of the wearer's thighs, the downwardly distributed forces 500 of the wearer's pudendum, the forces of the wearer's panties and possibly other external forces which act upon the napkin 10 from, for example, a chair or bed when the wearer sits or lays. As mentioned earlier, in preferred embodiments of the napkin 10, the absorbent means 39, and specifically the absorbent core 40 and the topsheet 45, flex generally in cooperation with the deformation element 20. Thus, when the thighs of a wearer apply lateral compressive forces 100 to the deformation element 20 causing it to bend and flex in the regions 61, 62 and 63 as previously described, the absorbent means 39 generally mimics such deformations. As the lateral

compressive forces 100 are lessened or relieved, such as when the wearer's thighs are spread, the reformable or resilient nature of the deformation element 20 is realized and the deformation element 20 begins to reform substantially to the shape the element 20 had prior to the influence of the external lateral compressive forces 100. Likewise, in cooperation with the reformation of the element 20, the absorbent means 39 preferably reforms to the shape the absorbent means 39 had prior to the influence of external forces. In preferred embodiments, as the wearer moves while walking, crossing her legs, squatting, etc., external forces which are being exerted on and relieved from the napkin 10 cause the napkin 10 as a whole, and the deformation element 20 and the absorbent means 39 individually, to go through a multitude of deformations and reformations.

In another alternatively preferred embodiment of the napkin 10 (not shown), the body surface 13 of the napkin 10 does not have a preformed convex upward configuration like the preferred napkin 10 described earlier and illustrated in Figures 1 through 8, but instead is planar across its width or has a concave downward configuration. In such embodiments, the body surface 13 must assume a convex upward configuration after the application of lateral compressive forces 100 to the longitudinal side edges 11 of the napkin 10 by the wearer's thighs.

Another alternative embodiment of the sanitary napkin 10 of the present invention is shown in Figures 21 and 22. As shown in Figures 21 and 22, the deformation element 20 is disposed between a liquid pervious topsheet 45 and an absorbent core 40. A liquid impervious barrier sheet 55, as is well known in the art, is provided adjacent to the second major surface 44 of the absorbent core 40 so as to prevent the exudates absorbed and contained in the absorbent core 40 from soiling articles such as bedsheets and undergarments which contact the napkin 10. The barrier sheet 55 extends slightly beyond the core end edges 42 and is folded about halfway up the core side edges 41 to prevent leakage. The absorbent core 40 is superimposed onto an adhesive which is applied to the inner surface of the barrier sheet 55 and which is intended to hold the barrier sheet 55 in place on the absorbent core 40. In this embodiment, the topsheet 45 extends

around the side edges 41 of the absorbent core 40 and over the barrier sheet 55 where it overlaps itself on the garment surface 14 of the napkin 10 so as to completely envelope the element 20, the absorbent core 40, and the barrier sheet 55, thereby forming what is commonly known as a "tubular napkin". The overlapping portions of the topsheet 45 are adhered to each other along the garment surface 14 of the napkin 10 and the end edges of the topsheet 45 and the barrier sheet 55 are heat-sealed to each other to form the end edges 12 of the napkin 10.

In this embodiment, the element 20 comprises a number of wood pulp fibers which have been compressed into a semi-rigid paper-board-like sheet and suitably bonded so as to be moisture stable. Alternatively, the element 20 could be comprised of many of the materials previously described. Because this element 20 has a greater flexure-resistance than the element 20 previously described and because it is smaller and has fewer flexure hinges than the element 20 previously described, it is somewhat less body conforming than the previous element 20. The means 23 is a flexure hinge 23E and more specifically a longitudinal set to the element 20 (i.e., a preferential fold or crease, scoring, embossing or indenting) along the longitudinal axis 90, which tends to pitch the element 20 upwardly along the fold, thus causing the element 20 to assume a somewhat flattened, inverted "V" shaped cross-section, as shown in Figure 22. The element 20 is placed in the napkin 10 in this configuration so that when the napkin 10 is worn, the element 20 will fold in a controlled and predetermined manner such that the body facing surface 16 of the element 20 will have a convex upward configuration. The lateral compressive forces 100 of the wearer's thighs may be applied to the element side edges 31 directly or they may be applied indirectly by transmission of the forces 100 from the longitudinal side edges 11 of the napkin 10 through other members of the napkin 10. When worn, the lateral compressive forces 100 of the thighs cause the element 20 to assume a more defined, inverted "V" shaped cross-section. Consequently, the topsheet 45 and particularly the body surface 13 of the napkin 10 assumes a convex upward configuration due to the inverted "V" shaping of the element 20. In the preferred embodiment, the element 20 has a generally hourglass shape. While other shapes such as

rectangular, square, oval, and others are effective and acceptable, it is believed that the hourglass shape offers unique benefits, when worn, in that the inwardly curved middle portion will accommodate the wearer's thighs while the wider end portions, which resultingly have a greater surface area for acquisition of menses and a greater cross-sectional absorptive capacity than the thinner middle portion, are positioned so that when worn the forward end portion will be aligned with and be beneath the vaginal orifice. In the preferred embodiment, the element 20 has a caliper of about 2.0 millimeters, a length along the longitudinal axis 90 of about 19.0 centimeters, a width across the ends of about 6.5 centimeters and a width across the lateral axis 80 of about 4.0 centimeters.

Another alternatively preferred embodiment of a sanitary napkin 10 is shown in Figure 23. The napkin 10 is comprised of a deformation element 20, an absorbent core 40 and a topsheet 45 having a body surface 13. As with the element 20 shown in Figures 6 through 8, this element 20 is preferably comprised of a foam material and is flexure-resistant, reformable and resilient. The napkin 10 and the body surface 13 in their at rest configurations have a convex upward configuration. The means 23 of the element 20 for inducing the body surface 13 of the napkin 10 to have a convex upward configuration is inherent in the element 20 simply due to its preformed arcuate shape. Thus, when lateral compressive forces 100 are applied to the longitudinal side edges 11 of the napkin 10, the element 20 simply maintains a convex upward configuration as it flexes. Consequently, the element 20 induces the absorbent core 40, the topsheet 45 and the body surface 13 of the napkin 10 to flex further while maintaining a convex upward configuration.

Another alternatively preferred sanitary napkin 10 embodiment of the present invention is shown in Figure 24, as it would appear when viewed from above its garment facing surface. The alternatively preferred napkin 10 comprises a topsheet 45 (not shown), an absorbent core 40, a deformation element 20, and a barrier sheet 55 (not shown). In the embodiment shown, the topsheet 45 overlays the first major surface 43 of the absorbent core 40 and extends beyond the core side edges 41 and the core

end edges 42. The absorbent core 40 is generally dog-bone shaped and overlays the deformation element 20. The element 20, in a preferred embodiment, is made of a thermomoldable substance, preferably a foam, as previously described. The element 20 is generally elliptical shaped and has an elliptical shaped cut-out. The deformation element 20 has a flexure hinge 23F which is formed by a preset fold along the longitudinal axis 90 in the back region 63 of the deformation element 20. The deformation element 20 is adhered to the absorbent core 40 such that the lateral centerline of the deformation element 20 is forward of the lateral centerline 80 of the napkin 10. The barrier sheet 55 underlays the element 20 and extends beyond the core side edges 41 and the core end edges 42 where it is affixed to the topsheet 45 in the periphery 15 of the napkin 10. When the napkin 10 is subjected to the lateral compressive forces 100 of the wearer's thighs, the element 20 bends down about the flexure hinge 23F in the back region 63 while the interior side edges 99 of the element 20 move up and in. As seen in Figure 25, the front region 61 of the deformation element flips up. The front region 61 of the element 20 flips up due to the reaction of the geometric design of the element 20 to the lateral compressive forces 100 in the central region 62. In cooperation with the movement of the deformation element 20, the absorbent core 40 changes from an initially planar configuration to the configuration shown in Figure 25, in which the absorbent core 40 has a flipped up front region, a convex upward generally inverted "U" shaped cross-section in the central region 62 and a somewhat inverted "U" shaped cross-section in the back region 63. The topsheet 45, and particularly the body surface 13 of the napkin 10, generally assume the same shape as the first major surface 43 of the absorbent core 40.

Another alternatively preferred sanitary napkin 10 embodiment of the present invention is shown in Figures 26 and 27. The alternatively preferred napkin 10 comprises a topsheet 45 (not shown), an absorbent core 40, a deformation element 20, and a barrier sheet 55 (not shown). In a preferred embodiment, the deformation element 20 is disposed between the absorbent core 40 and the barrier sheet 55. The topsheet 45 overlays the first major surface 43 of the absorbent core 40 and extends around the

side edges 41 of the absorbent core 40 and over the barrier sheet 55 where it overlaps itself on the garment surface 14 of the napkin 10 so as to completely envelope the absorbent core 40, the element 20 and barrier sheet 55, thereby forming what is commonly known as a "tubular napkin". The deformation element 20 is preferably made of a moldable substance, preferably a foam. As shown in Figure 26, the deformation element 20 is generally dog-bone shaped in its flat-out, untensioned state. The dog-bone element 20 has a generally dog-bone shaped cut-out. The means 23 of the element 20 for inducing the body surface 13 of the napkin 10 to have a convex upward configuration is a tension means 27. In the preferred embodiment shown, the tension means 27 is an elastic band which is affixed near each end edge 32 of the element 20, preferably with an adhesive. The absorbent core 40 overlays the element 20 and the tensioning means 27. The tensioning means 27 is a member that is in tension and which, therefore, induces the end edges 32 of the element 20 to bend upwards and towards each other, causing the front region 61 and the back region 63 of the element 20 to bend upwards in the direction of the wearer's body (not shown). Of course, the greater the tensile force, the more the element 20 will bend. The neutral, at rest configuration, shown in Figure 27, of the napkin 10 is generally an inverted "U" saddle shape, wherein the central region 62 has a generally inverted "U" shaped cross-section and the front region 61 and back region 63 are flipped upwards. The tension means 27 supplies an upward force along the longitudinal axis 90 to the second major surface 44 of the absorbent core 40 and, because the outer side portions of the core 40 are associated with the element 20, the absorbent core 40 has a generally inverted "U" shaped cross-section in the central region 62. When worn, the longitudinal side edges 11 of the napkin 10 are forced inwards causing the absorbent core 40 and the body surface 13 of the napkin 10 to assume an even more defined convex upward generally "U" shaped configuration in the central region 62. The front region 61 remains in its flipped up position, and the back region 63 flattens out somewhat under the forces of the buttocks but generally maintains a convex upward configuration so that the napkin 10 generally has the shape depicted in Figure 27, when worn. Preferred tensioning means 27 are a string or an elastic means, such as an elastic band.

Alternatively, the tensioning means 27 could be placed laterally and be attached to the longitudinal side edges 31 of the element 20 thereby causing the longitudinal side edges 31 of the element 20 to be pulled inwards towards each other which consequently forces the absorbent core 40 and the body surface 13 of the napkin 10 into a convex upward configuration.

In still another alternative embodiment of the present invention (not shown), the deformation element 20 is isolated from contact with moisture. Thus, such an embodiment might comprise from the body surface 13 down a liquid permeable topsheet 45, an absorbent core 40, a liquid permeable barrier sheet 55, a deformation element 20, and another liquid impermeable barrier sheet 65, the sheets 45, 55 and 65 being sealed about their peripheries. In such an embodiment, the deformation element 20 is not susceptible to being wetted when worn and thus, the deformation element 20 may be comprised of moisture unstable materials such as compressed, unbonded fluff pulp.

Yet another alternatively preferred embodiment of a sanitary napkin 10 and specifically a deformation element 20 of the present invention is shown in Figure 28. The napkin 10 comprises a barrier sheet 55, an absorbent core 40 and a topsheet 45 (not shown). The absorbent core 40 is comprised of fluff pulp. In a middle portion 84 of the absorbent core 40 the fluff pulp is embossed in a lattice pattern 82 such that the lattice members 86 are highly densified. Further, because the absorbent core 40 is susceptible to wetting, the fluff pulp is adhesively bonded throughout the middle portion 84 by a water insoluble adhesive. Thus, the deformation element 20 of the present invention is said to be the middle portion 84 of the absorbent core 40. The fluff pulp can be bonded or unbonded beyond the middle portion 84. The absorbent core 40 has a preferential set (not shown) on its second major surface 44 along the longitudinal axis 90 so that the deformation element 20 is inclined to have a convex upward configuration when the sanitary napkin 10 is worn. The absorbent core 40 is about 20.5 centimeters long, about 13.0 centimeters wide, about 1.0 centimeters thick in the unembossed areas and about 0.5 centimeters thick in the embossed areas. The middle embossed portion 84 of the absorbent core 40 is about

10.0 centimeters long and about 6.3 centimeters wide. The embossed lattice members 86 are about 3.0 millimeters wide. For illustration, if the Circular Bend Procedure were to be performed on this element 20, a likely 37.5 by 37.5 millimeter test sample might be that portion of the element 20 enclosed by the square 300, as shown by dashed lines in Figure 28. Of course, a person would want to test a number of other portions also but this portion would seem to be the most flexure-resistant since this portion has as great of proportion of densified area as any other portion of the element 20. It should be noted that the test specimens would need to be tested using the large diameter test plate since the specimens would have an uncompressed optical caliper greater than 6.35 millimeters.

Still another alternative embodiment of a sanitary napkin 10 of the present invention is shown in Figures 28 and 29. In this embodiment, the sanitary napkin 10 comprises, from the body surface 13 down, a topsheet 45, a wipe acquisition sheet 93, a tissue layer 94, an absorbent core 40, a barrier sheet 55, and a deformation element 20. As seen in Figure 28, in this embodiment the deformation element 20 is centered in the napkin 10. Basically, the deformation element 20 of this embodiment is generally similar to the midportion of the deformation element 20 shown in Figures 6 and 7. In this embodiment, the deformation element 20 is affixed to the garment facing surface of the barrier sheet 55. However, the deformation element 20 might be disposed in a number of positions throughout the laminates of the napkin 10, such as between the absorbent core 40 and the barrier sheet 55. Beyond the ends 32 of the deformation element 20, the sanitary napkin 10 is highly flexible. Further, the napkin 10 has a relatively very thin caliper, especially beyond the ends 32 of the element 20. In a preferred embodiment, the topsheet 25 is an apertured formed film, the wipe acquisition sheet 93 is an apertured nonwoven sheet, such as the SONTARA 8407, manufactured by E.I. DuPont Nemours & Company of Wilmington, Delaware, (SONTARA Registered Trademark by E.I. DuPont Nemours & Company), the tissue layer 31 is a wet-laid tissue such as that disclosed in U.S. Patent 3,301,746, entitled "Process For Forming Absorbent Paper By Imprinting A Fabric Knuckle Pattern Thereon Prior To Drying And Paper Thereof", which

patent issued to Sanford and Sisson on January 31, 1967, and the absorbent core 40 is a superabsorbent laminate such as the WATER-LOCK L-535 available from the Grain Processing Corporation of Muscatine, Iowa (WATER-LOCK Registered Trademark by Grain Processing Corporation).

As seen in Figure 29, the napkin 10, when subjected to the forces of the wearer's body, when worn, takes on a number of the beneficial shapes of the napkins 10 previously described. This embodiment is particularly useful for the following reason. The deformation element 20, and the areas of the napkin 10 superimposed over the element 20, take on a convex upward configuration beneath the vestibule and specifically beneath the vaginal orifice. Thus, the napkin 10 is able to acquire menses immediately as it exits the vestibule. In addition, beyond the ends 32 of the element 20, the napkin 10 is highly flexible and very thin. Thus, the napkin 10 is extremely comfortable, has a low wearing awareness, and conforms very nicely to the mons pubis and the gluteal groove.

While particular embodiments of the present invention have been illustrated and described, it would be obvious to those skilled in the art that various other changes and modifications can be made without departing from the spirit and scope of the invention. It is, therefore, intended to cover in the appended claims all such changes and modifications that are within the scope of this invention.

What is claimed is:

THE CLAIMS DEFINING THE INVENTION ARE AS FOLLOWS:

1. An externally worn disposable absorbent article, comprising:

a moisture pervious topsheet;

a moisture impervious backsheet associated with said topsheet;

an absorbent means intermediate said topsheet and said backsheet;

a body-facing surface associated with said topsheet; and

a moisture stable deformation element associated with said absorbent means, said deformation element being flexure-resistant, as herein defined, at least a portion of said body-facing surface having a convex upward configuration when said article is subjected to lateral compressive forces of the wearer's thighs.

2. An externally worn disposable absorbent article, comprising:

a moisture pervious topsheet;

a moisture impervious backsheet associated with said topsheet;

an absorbent means intermediate said topsheet and said backsheet;

a body-facing surface associated with said topsheet; and

a moisture stable deformation element associated with said absorbent means, said deformation element being flexure-resistant, as herein defined, at least a portion of said body-facing surface having a convex upward configuration, said body-facing surface maintaining said convex upward configuration when said article is subjected to lateral compressive forces of the wearers thighs.

3. The disposable absorbent article as claimed in claim 1 or 2 wherein said deformation element has a means for inducing said body surface of said article to have said convex upward configuration when said article is subjected to said lateral compressive forces.

AUSTRALIAN PATENT OFFICE LS

4. The disposable absorbent article as claimed in Claim 3, wherein said article has a central region, said central region being disposed beneath the pudendal region of a wearer when said article is worn, said central region having a length which corresponds to the length of the pudendal region between the anterior commissure and the posterior commissure, said portion of said body surface having said convex upward configuration being at least partially within said central region.

5. The disposable absorbent article as claimed in Claim 4, further comprising longitudinal side edges, wherein said portion of said body surface having said convex upward configuration is generally symmetrically located between said longitudinal side edges.

6. The disposable absorbent article as claimed in Claim 5, wherein the portion of said article disposed beneath said portion of said body surface having said convex upward configuration has a convex upward cross-section.

7. The disposable absorbent article as claimed in Claim 3, wherein said means is a flexure hinge, as hereinbefore defined,

8. The disposable absorbent article as claimed in Claim 7, wherein said flexure hinge extends at least partially generally longitudinally.

9. The disposable absorbent article as claimed in Claim 8, wherein said flexure hinge is formed by a geometric discontinuity in said deformation element.

10. The disposable absorbent article as claimed in Claim 8, wherein said flexure hinge is formed by changes in the material properties of said element.

11. The disposable absorbent article as claimed in Claim 3, wherein said deformation element is reformable.

12. The disposable absorbent article as claimed in Claim 11, wherein said deformation element is resiliant.

13. The disposable absorbent article as claimed in Claim 4, wherein said article has walls, said walls having a pudendal surface and a base, said pudendal surface of said walls at said base of said walls being adjacent to said portion of said body surface of said article having said convex upward configuration in said central region.

14. The disposable absorbent article as claimed in Claim 13, wherein said pudendal surface of said walls in conjunction with said portion of said body surface of said article having said convex upward confirugation combine to present a generally "W"-shaped configuration.

15. The disposable absorbent article as claimed in Claim 4, wherein said article has a front region, said front region being adjacent to and forward of said central region, said front region being generally cupped-shape when said article is subjected to said lateral compressive forces.

16. The disposable absorbent article as claimed in Claim 4, wherein said article has a back region, said back region being adjacent to and backward of said central region, said back region having a body surface and a ridge, said body surface having a convex upward configuration, said ridge being configured so as to fit the gluteal groove of a wearer when said article is worn.

17. The disposable absorbent article as claimed in Claim 4, wherein said deformation element comprises a moldable substance.

18. The disposable absorbent article as claimed in Claim 17, wherein said deformation element comprises a thermomoldable substance.

19. The disposable absorbent article as claimed in Claim 18, wherein said thermomoldable substance is selected from the group consisting of polyethylene, polypropylene, polyester, polybutylene, polyurethane, ethylene vinyl acetate, thermobondable cellulose, latex or silicone elastomerics.

20. The disposable absorbent article as claimed in Claim 4, wherein said deformation element is liquid impermeable and integral with said backsheet.

21. The disposable absorbent article as claimed in Claim 20, wherein said absorbent means has a first major surface and a second major surface and said deformation element has a body facing surface, said absorbent means being superimposed on said deformation element such that said second major surface of said absorbent means is adjacent said body facing surface of said deformation element.

22. The disposable absorbent article as claimed in Claim 20, wherein said absorbent means has a first major surface and a second major surface, said deformation element further has a bottom surface, said deformation element being superimposed on said absorbent means such that said bottom surface of said deformation element is adjacent said first major surface of said absorbent means.

23. The disposable absorbent article as claimed in Claim 20, wherein said absorbent means comprises an absorbent core and said moisture pervious ~~a liquid permeable~~ topsheet, said topsheet being the layer of said article nearest the pudendal region of a wearer when said article is worn, said topsheet being associated with said deformation element.

24. The disposable absorbent article as claimed in Claim 4, wherein said deformation element is absorbent.

25. The disposable absorbent article as claimed in Claim ~~20~~ 4, wherein said absorbent means comprises ~~a liquid~~ said moisture pervious ~~permeable~~ topsheet and an absorbent core having a first major surface and a second major surface, said topsheet overlaying said first major surface of said absorbent core, said deformation element being disposed within said absorbent core between said first major surface and said second major surface.

26. The disposable absorbent article as claimed in Claim 18, wherein said deformation element is absorbent and at least a portion of said body facing surface of said deformation element is liquid permeable.

27. The disposable absorbent article as claimed in Claim 4, wherein said body surface of said article achieves intimate contact with the external surfaces of the pudendal region of a wearer when said article is worn, causing said body surface of said article having said convex upward configuration to deform.

~~28. The disposable absorbent article as claimed in Claim 26, wherein said deformation is an outward bulge.~~

28. ~~28.~~ The disposable absorbent article as claimed in Claim 4, wherein said article is intended to reside completely outside of the wearer's vestibule.

29. ~~29.~~ The disposable absorbent article as claimed in Claim 4, wherein said deformation element has a flexure-resistance of at least about 100.0 grams.

30. ~~31.~~ The disposable absorbent article as claimed in Claim 4, wherein said deformation element has a flexure-resistance of at least abouc 200.0 grams.

31. ~~32.~~ The disposable absorbent article as claimed in Claim 4, wherein said deformation element has a flexure-resistance of at least about 350.0 grams.

32. ~~33.~~ The disposable absorbent article as claimed in Claim 4, wherein said deformation element has a flexure-reistance of at least about 500.0 grams.

33. ~~34.~~ The disposable absorbent article as claimed in Claim 3, wherein said means is a tension means.

DATED this 25th day of July, 1990

THE PROCTER & GAMBLE COMPANY

WATERMARK
Patent & Trademark Attorneys
"The Atrium"
290 Burwood Road
Hawthorn
Victoria 3122
AUSTRALIA



LCG:EK(13:10)

Fig. 1

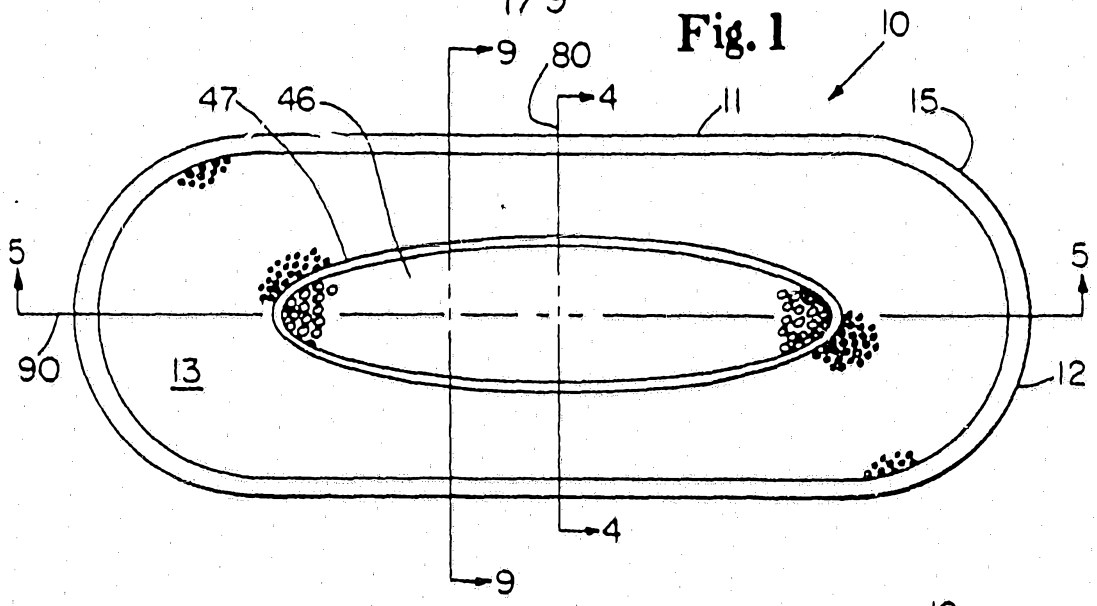

Fig. 2

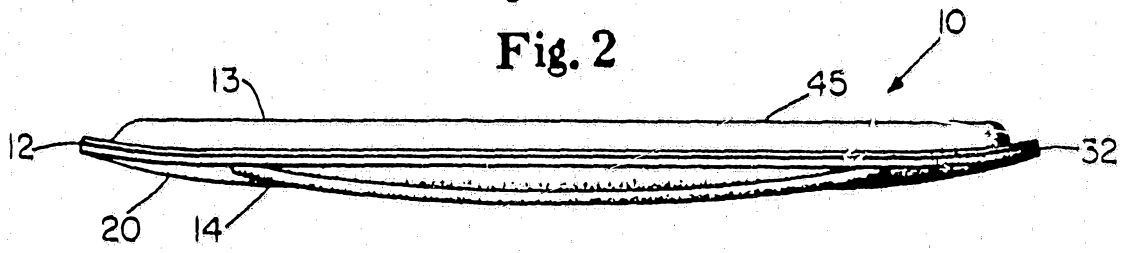

Fig. 3

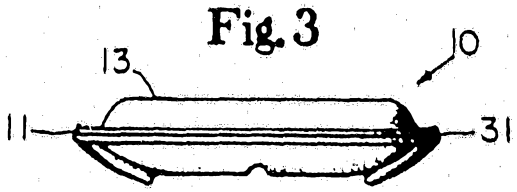

Fig. 4

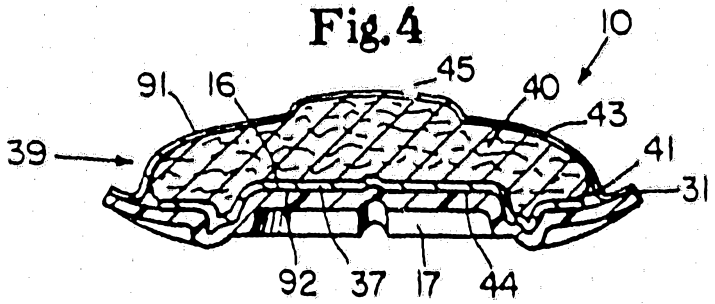

Fig.5

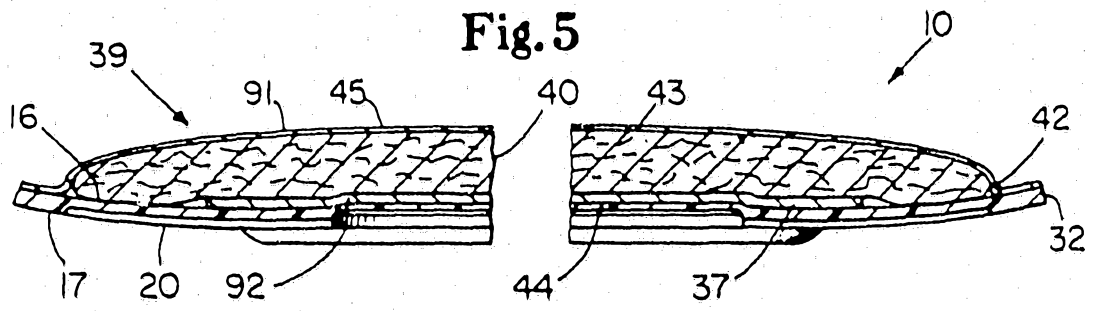

Fig.6

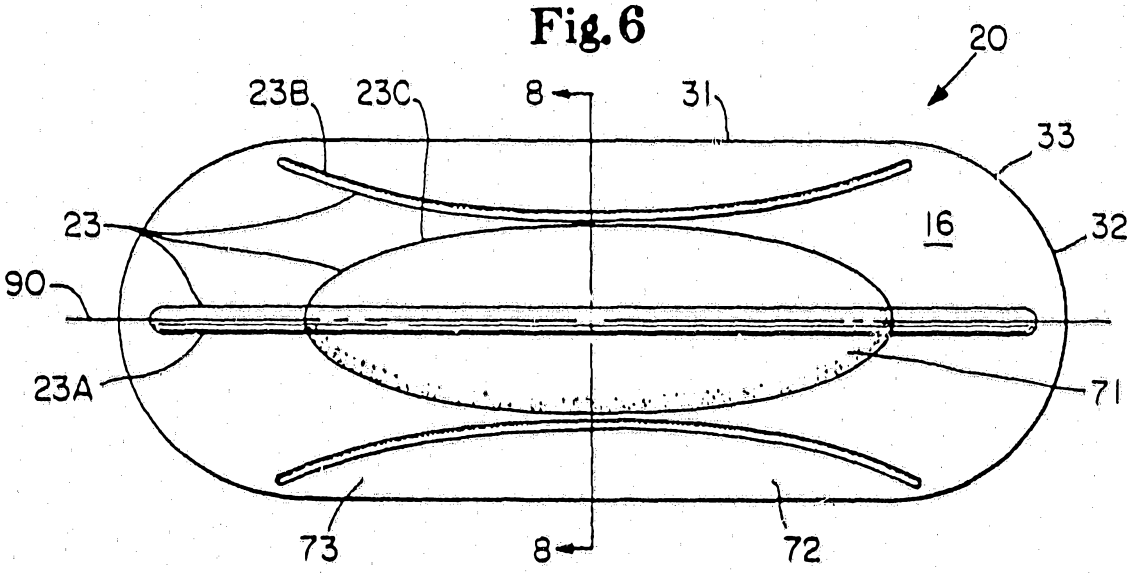

Fig.7

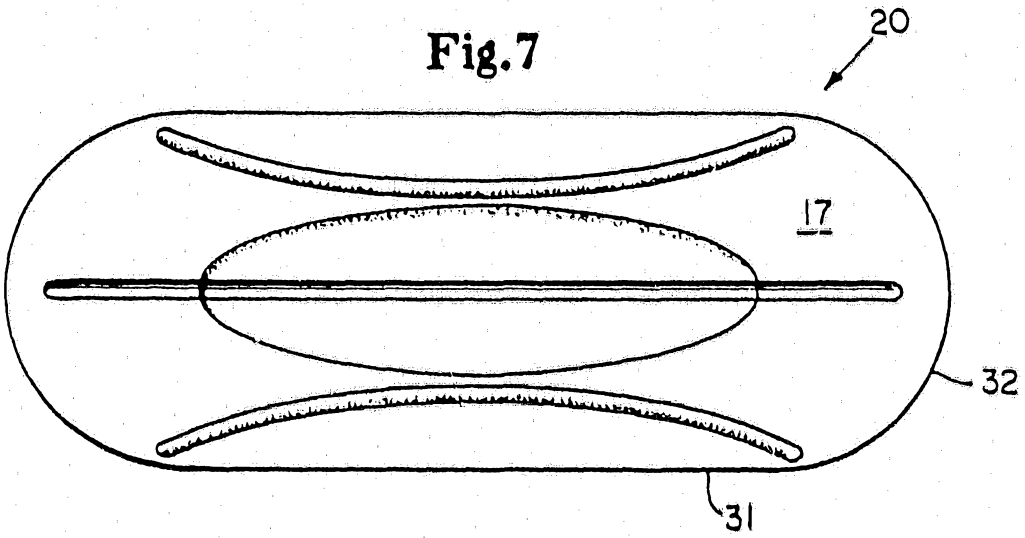

Fig. 8

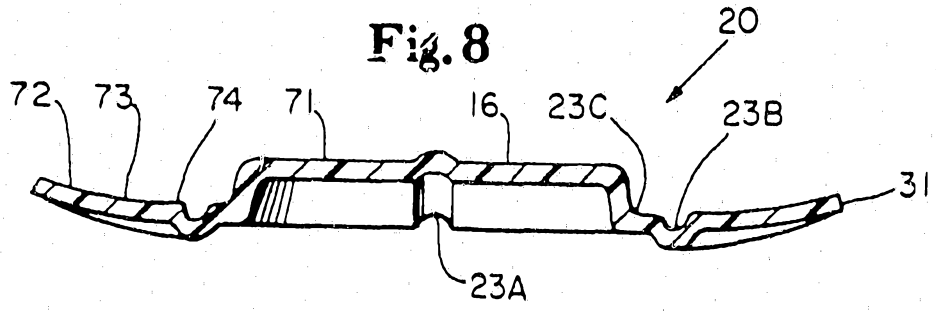

Fig. 9

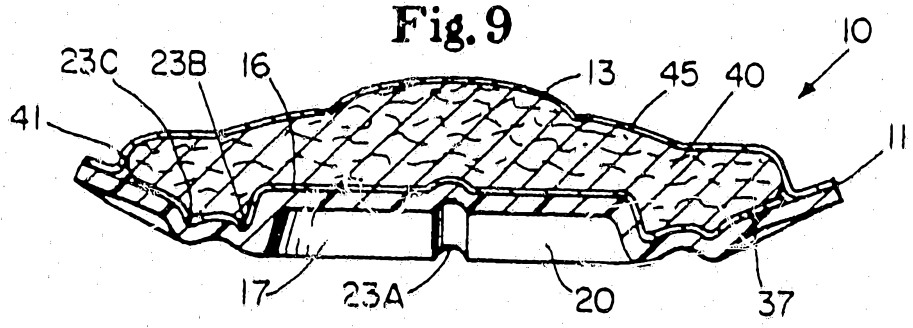

Fig. 10

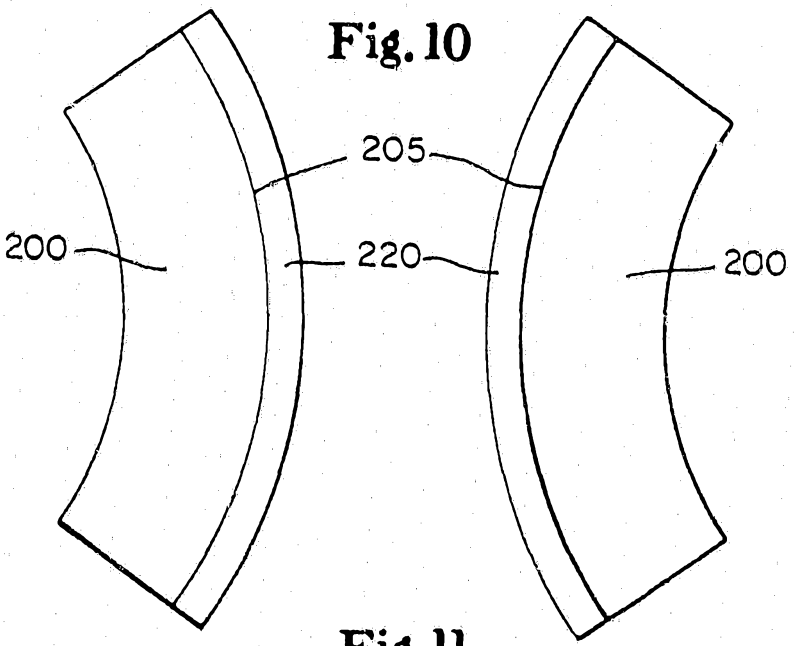

Fig. 11

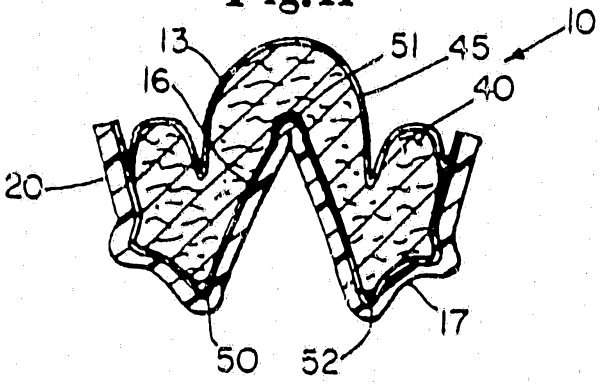

Fig. 12

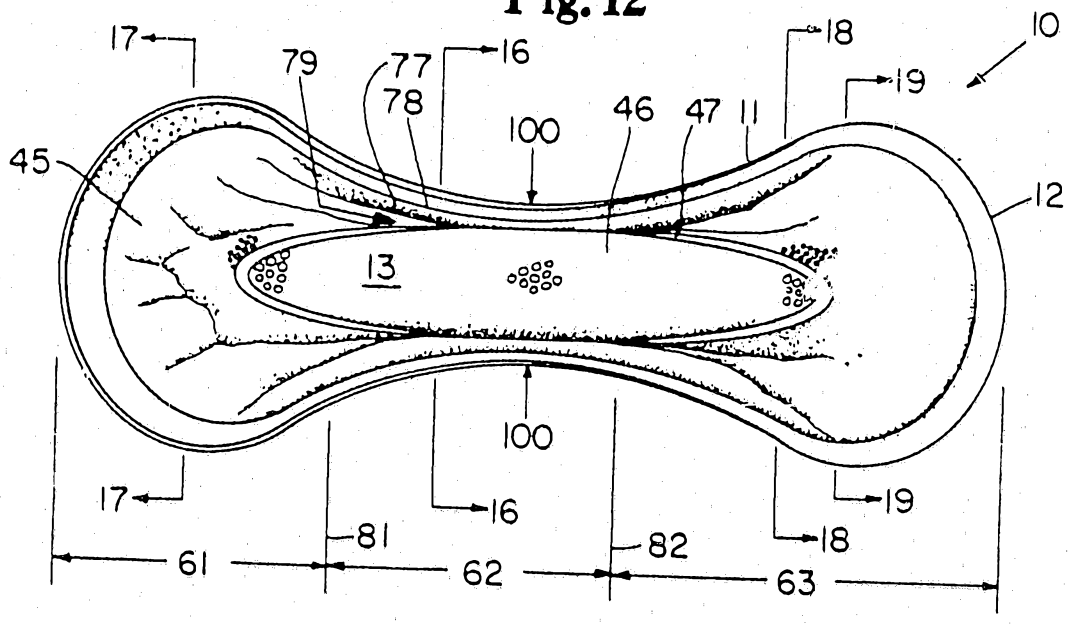

Fig. 13

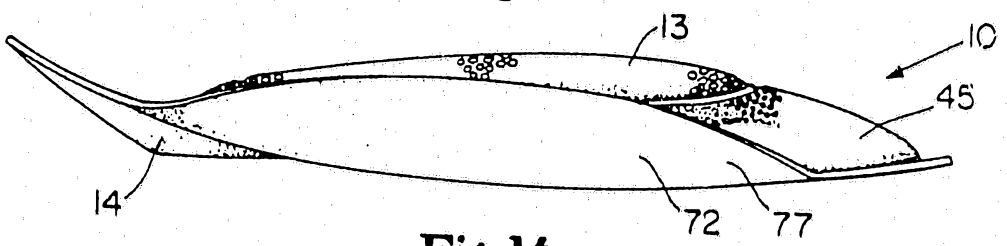

Fig. 14

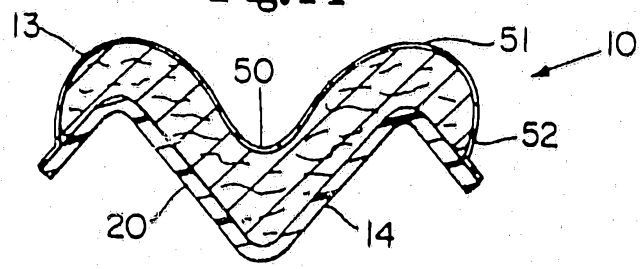

Fig. 15

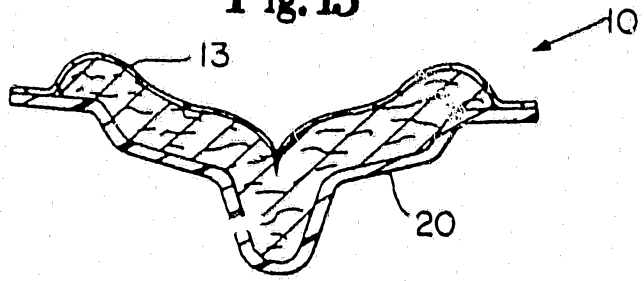

Fig. 16

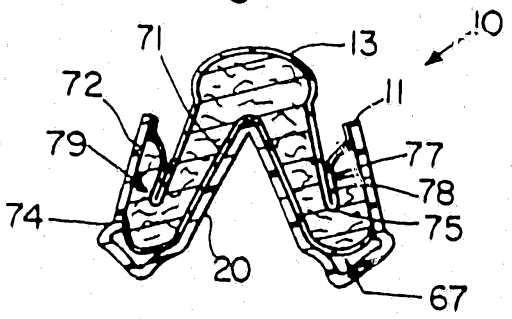

Fig. 17

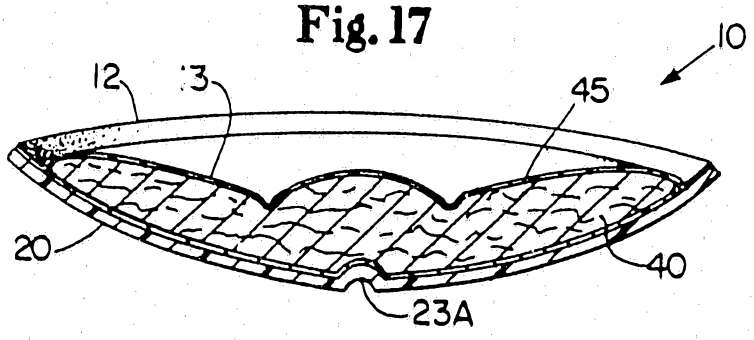

Fig. 18

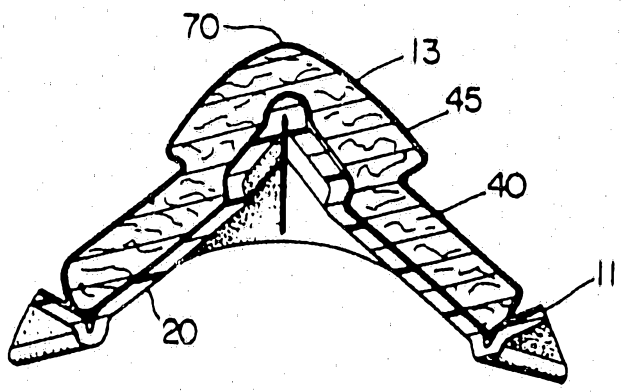

Fig. 19

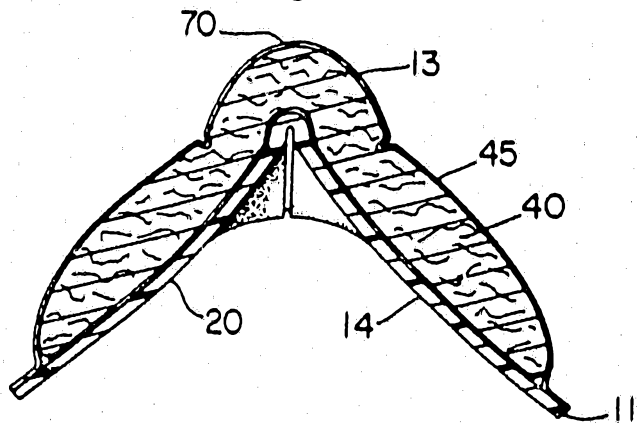

Fig. 20

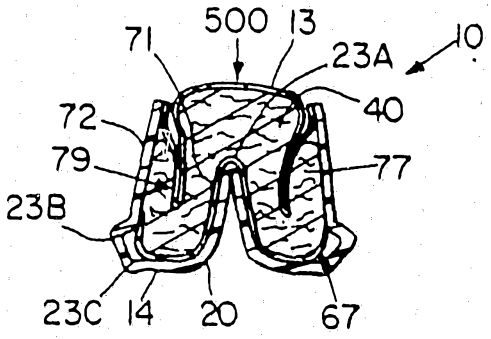

Fig. 21

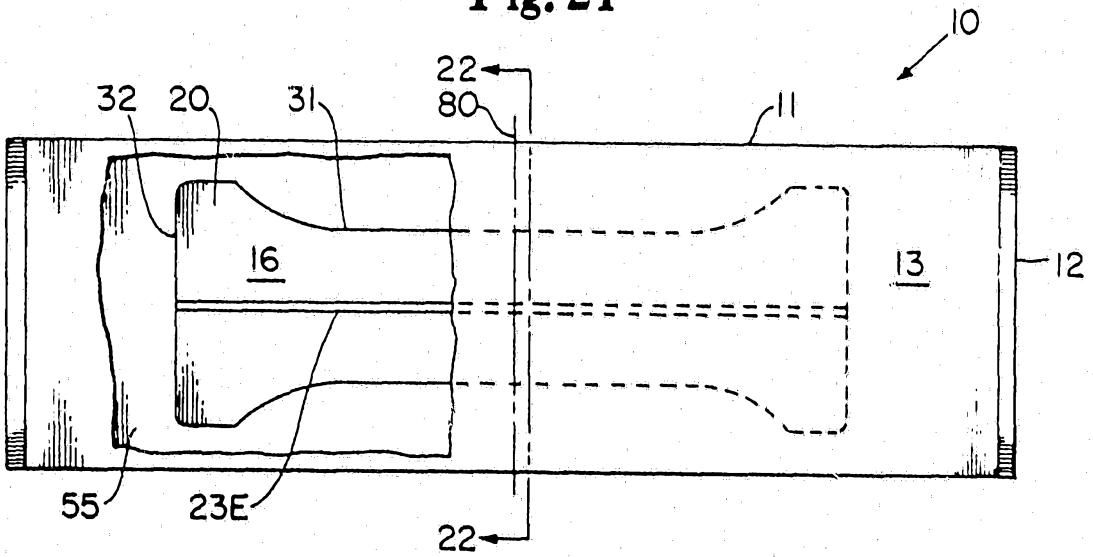

Fig. 22

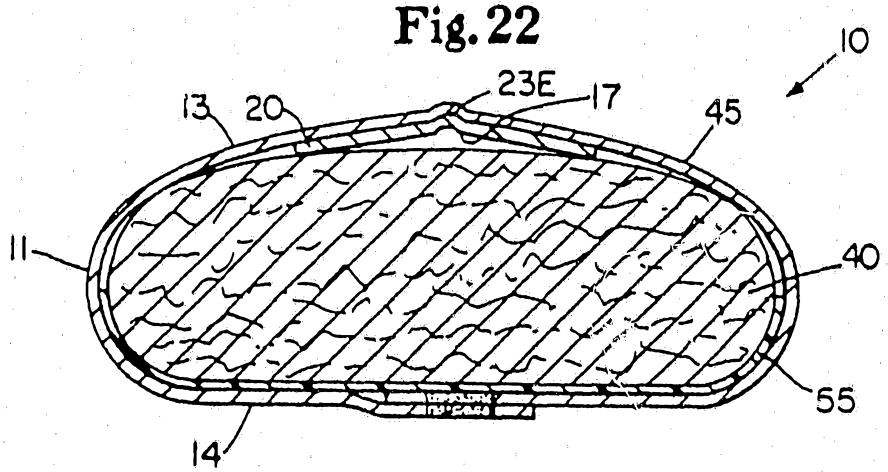

Fig.23

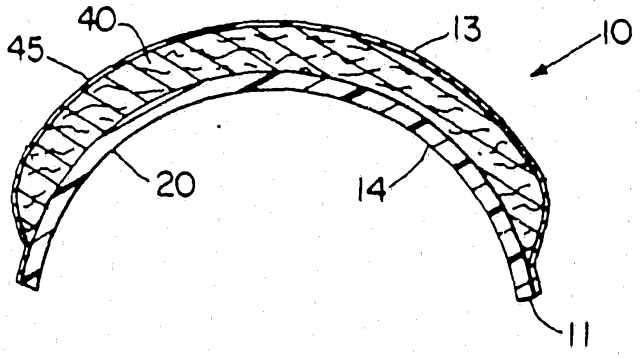

Fig.24

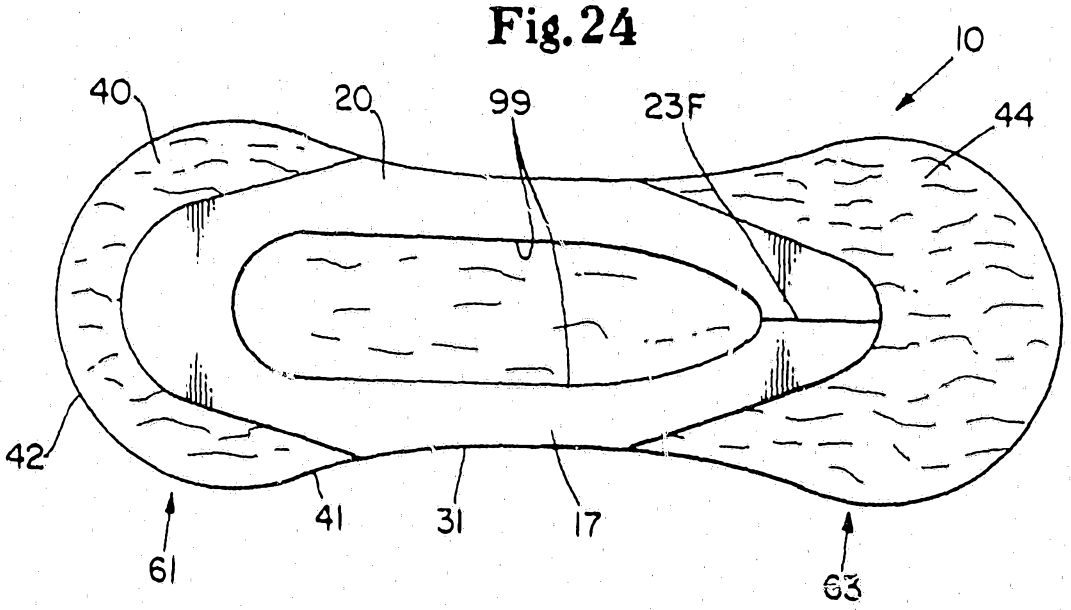

Fig.25

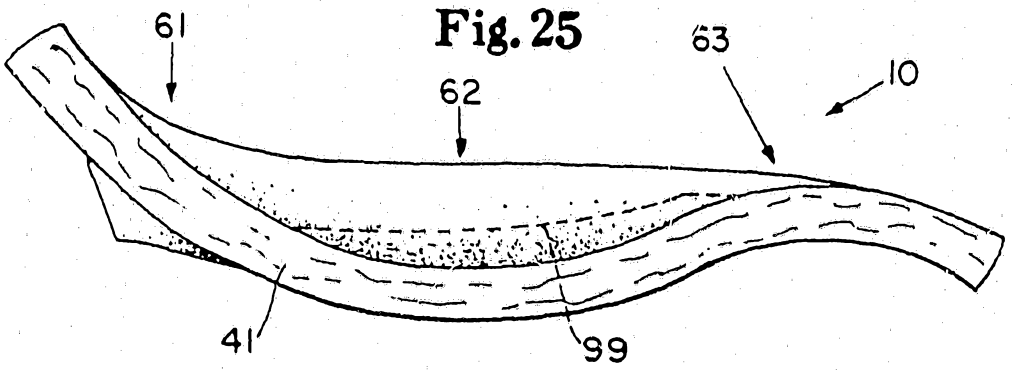

Fig.26

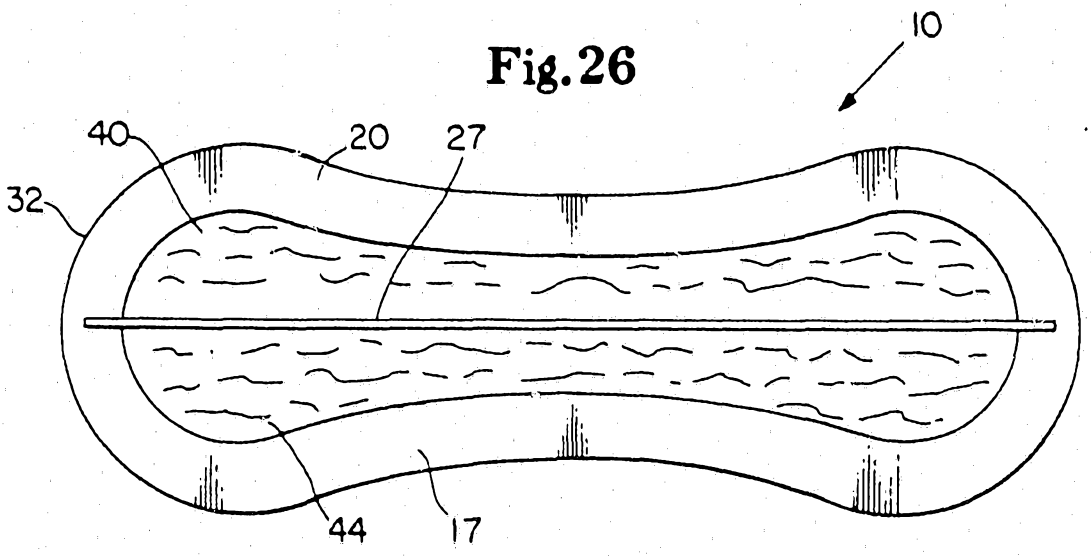

Fig.27

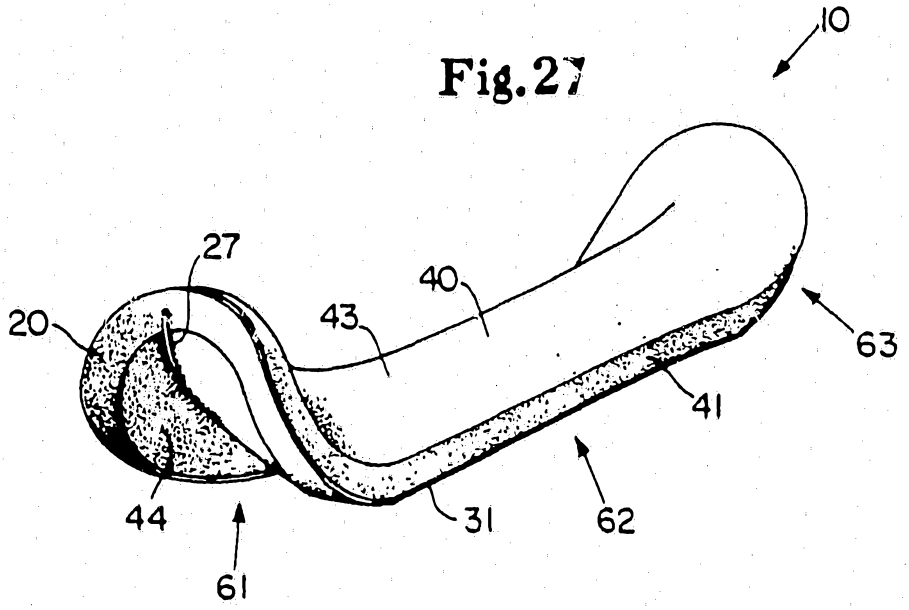

Fig. 28

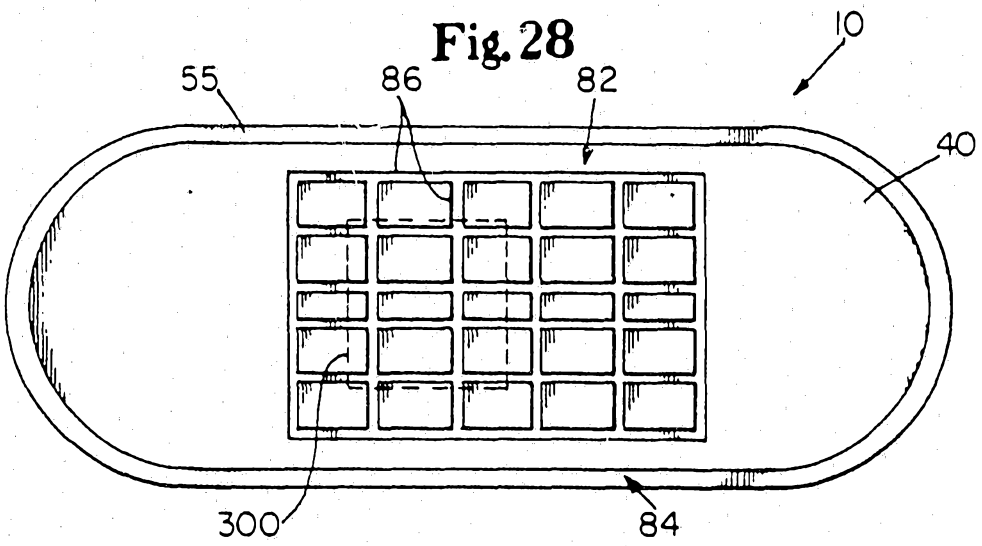

Fig. 29

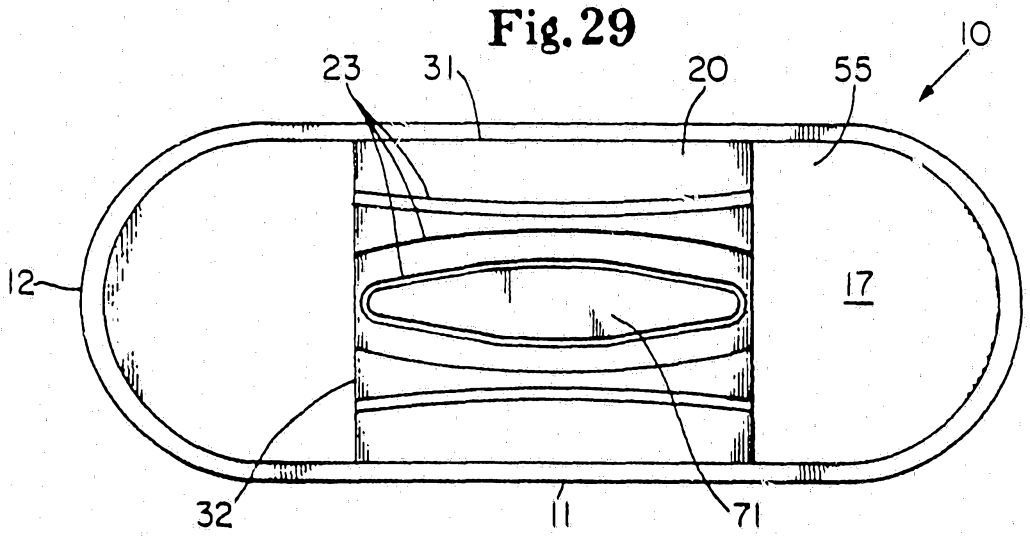

Fig. 30

