Dec. 3, 1940. A. SCHELLENBERG 2,223,860

MULTIPLE ROLL WRINGER

Filed Dec. 12, 1939 9 Sheets-Sheet 1

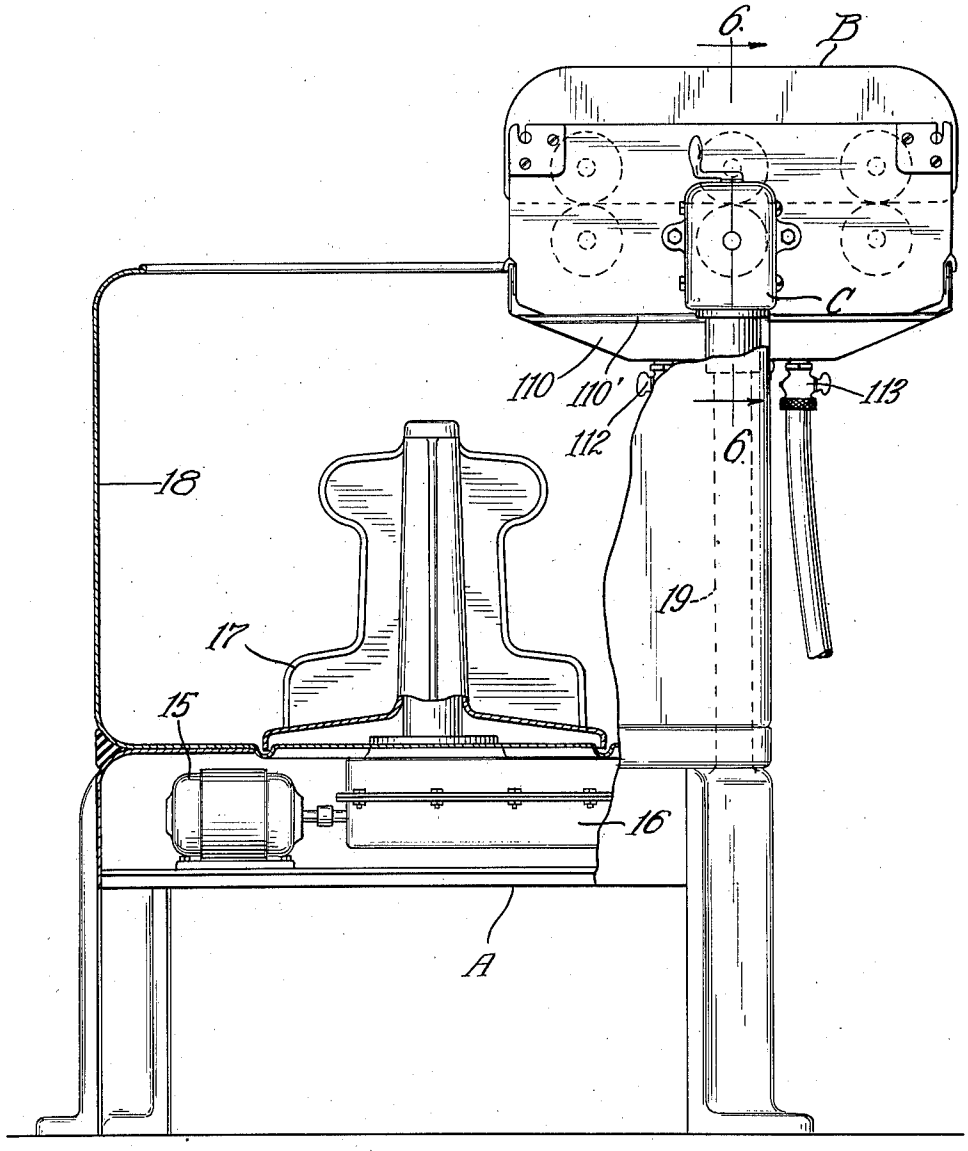

Fig. 1.

Inventor:
Albert Schellenberg
By: Tefft & Tefft.
Attys.

Dec. 3, 1940. A. SCHELLENBERG 2,223,860

MULTIPLE ROLL WRINGER

Filed Dec. 12, 1939 9 Sheets-Sheet 2

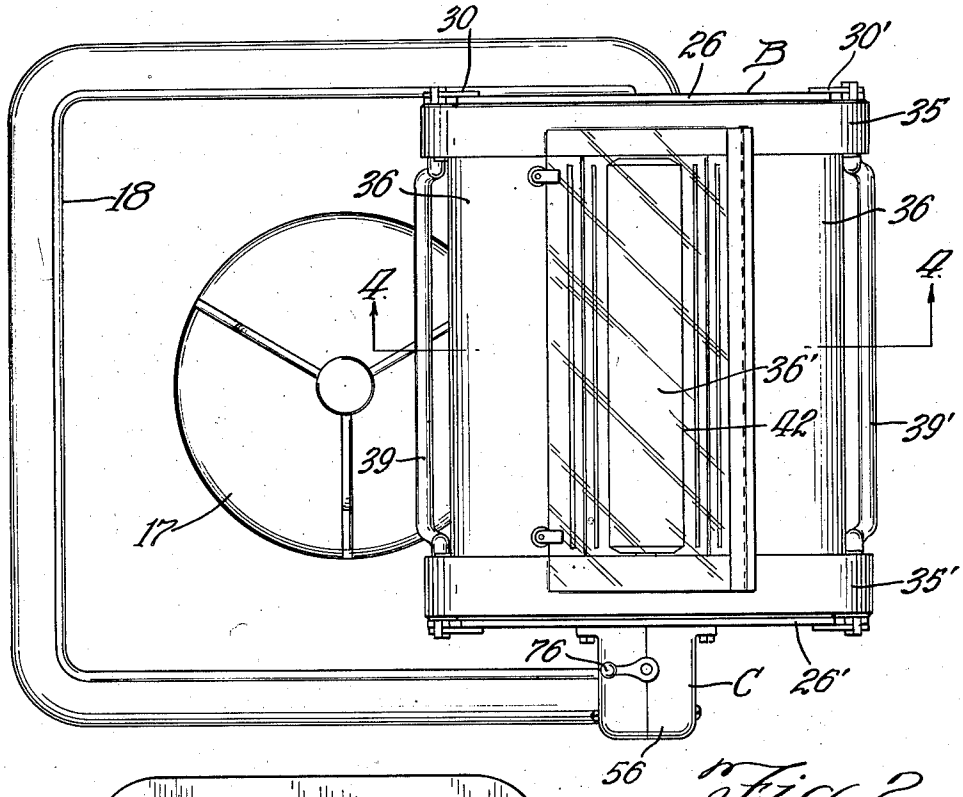

Fig. 2.

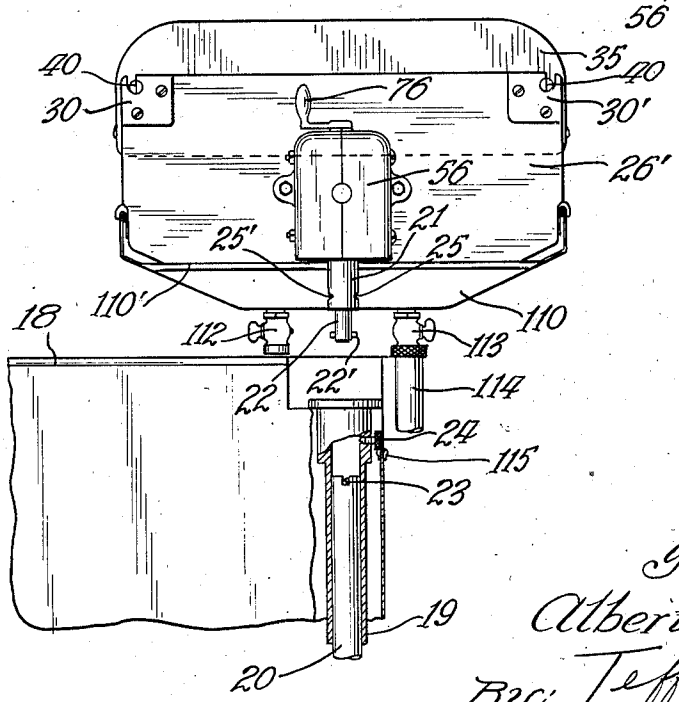

Fig. 3.

Inventor:
Albert Schellenberg
By: Tefft & Tefft
Attys.

Dec. 3, 1940. A. SCHELLENBERG 2,223,860

MULTIPLE ROLL WRINGER

Filed Dec. 12, 1939 9 Sheets-Sheet 3

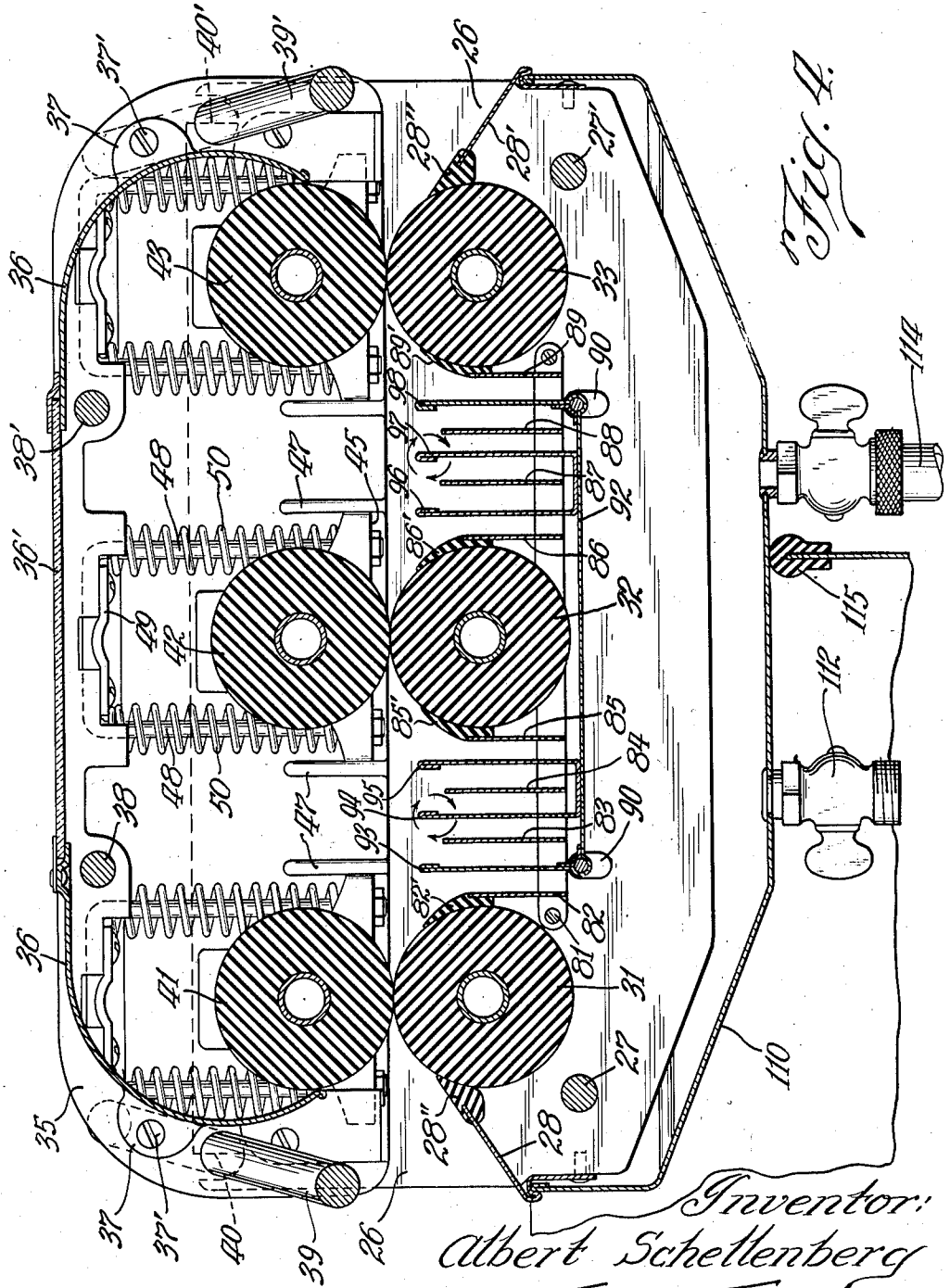

Fig. 4.

Inventor:
Albert Schellenberg
By: Tefft & Tefft
Attys.

Dec. 3, 1940. A. SCHELLENBERG 2,223,860

MULTIPLE ROLL WRINGER

Filed Dec. 12, 1939 9 Sheets-Sheet 4

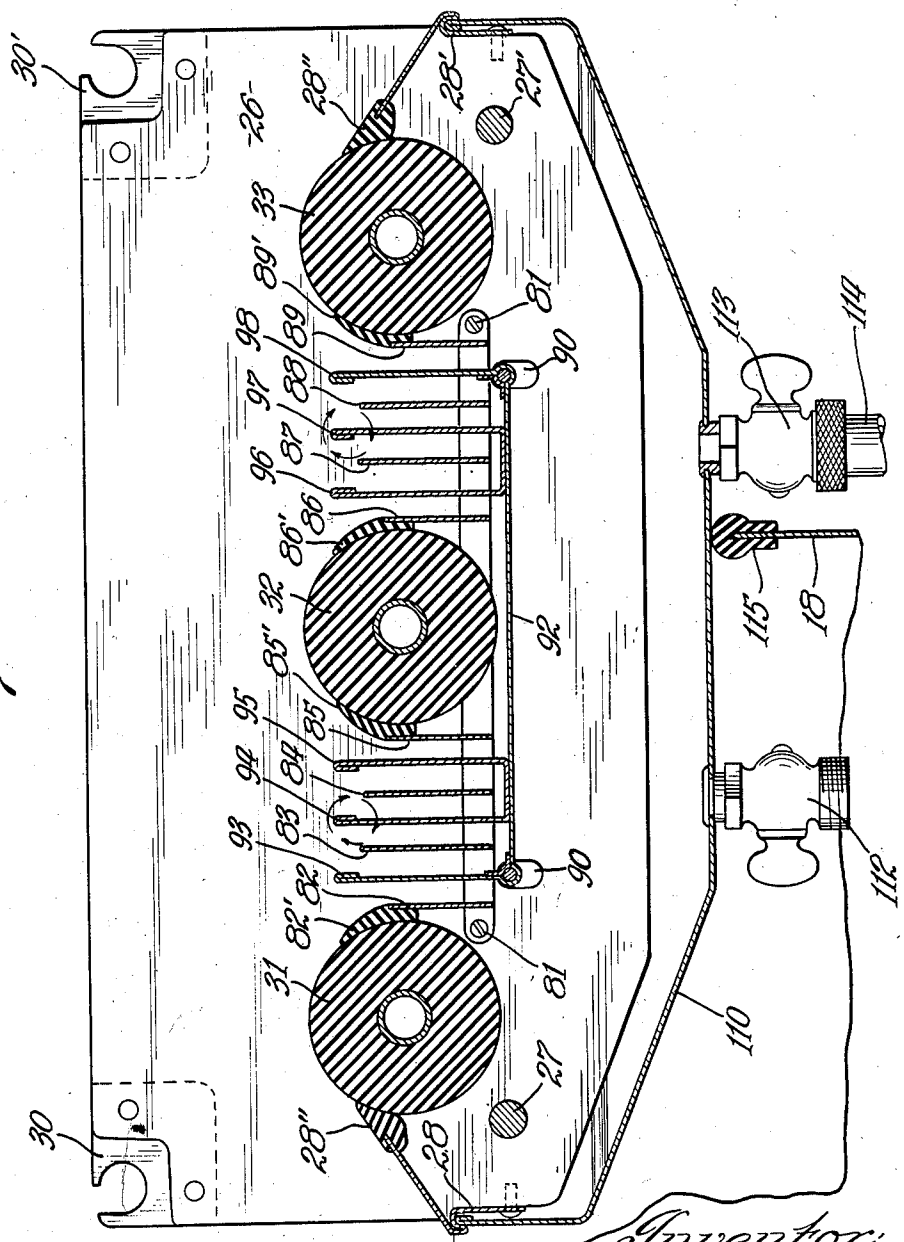

Fig. 5.

Inventor:
Albert Schellenberg
By: Tefft & Tefft.
Attys.

Dec. 3, 1940. A. SCHELLENBERG 2,223,860

MULTIPLE ROLL WRINGER

Filed Dec. 12, 1939 9 Sheets-Sheet 5

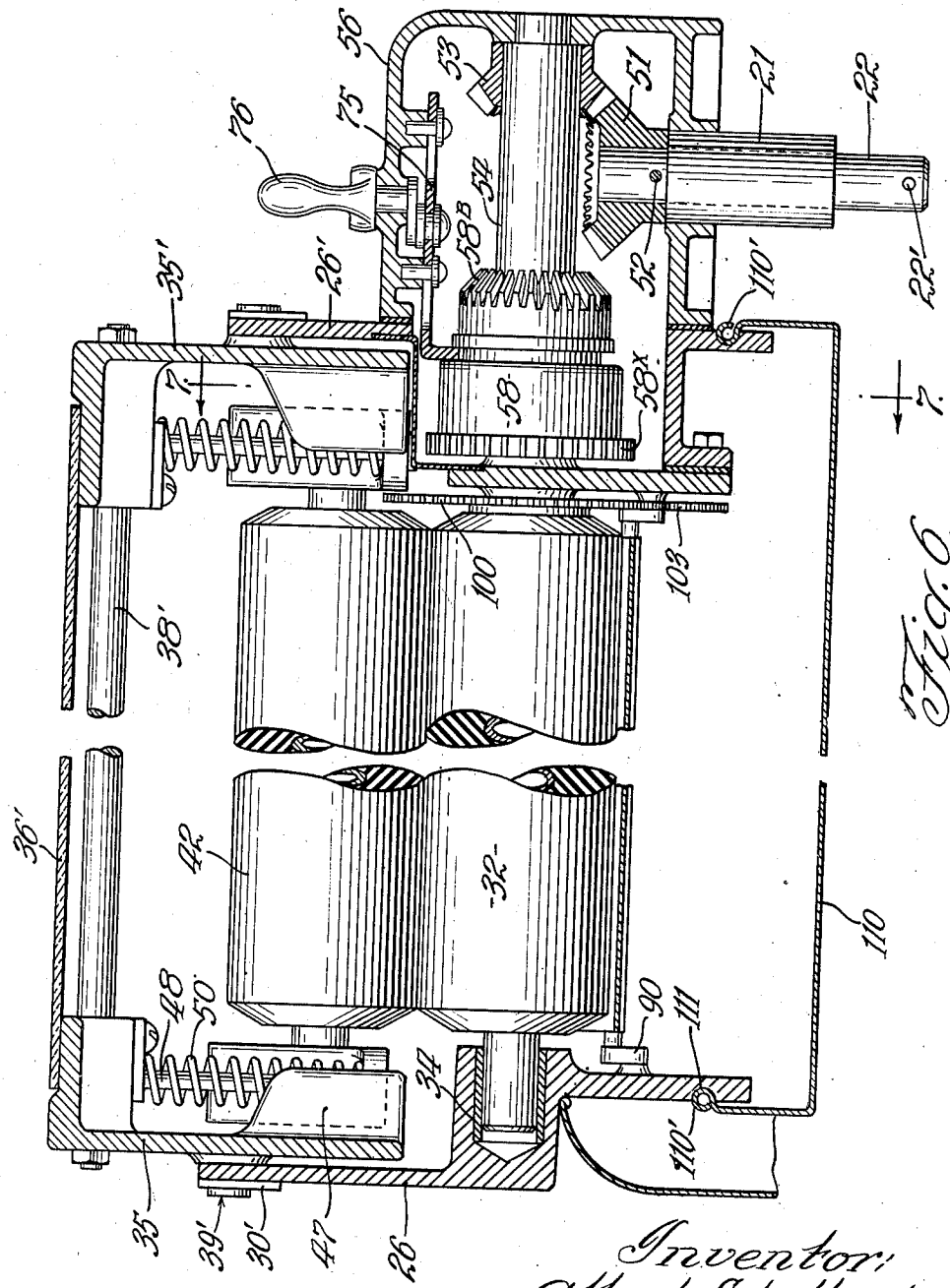

Fig. 6.

Inventor:
Albert Schellenberg
By: Tefft & Tefft.
Attys.

Dec. 3, 1940. A. SCHELLENBERG 2,223,860

MULTIPLE ROLL WRINGER

Filed Dec. 12, 1939 9 Sheets-Sheet 6

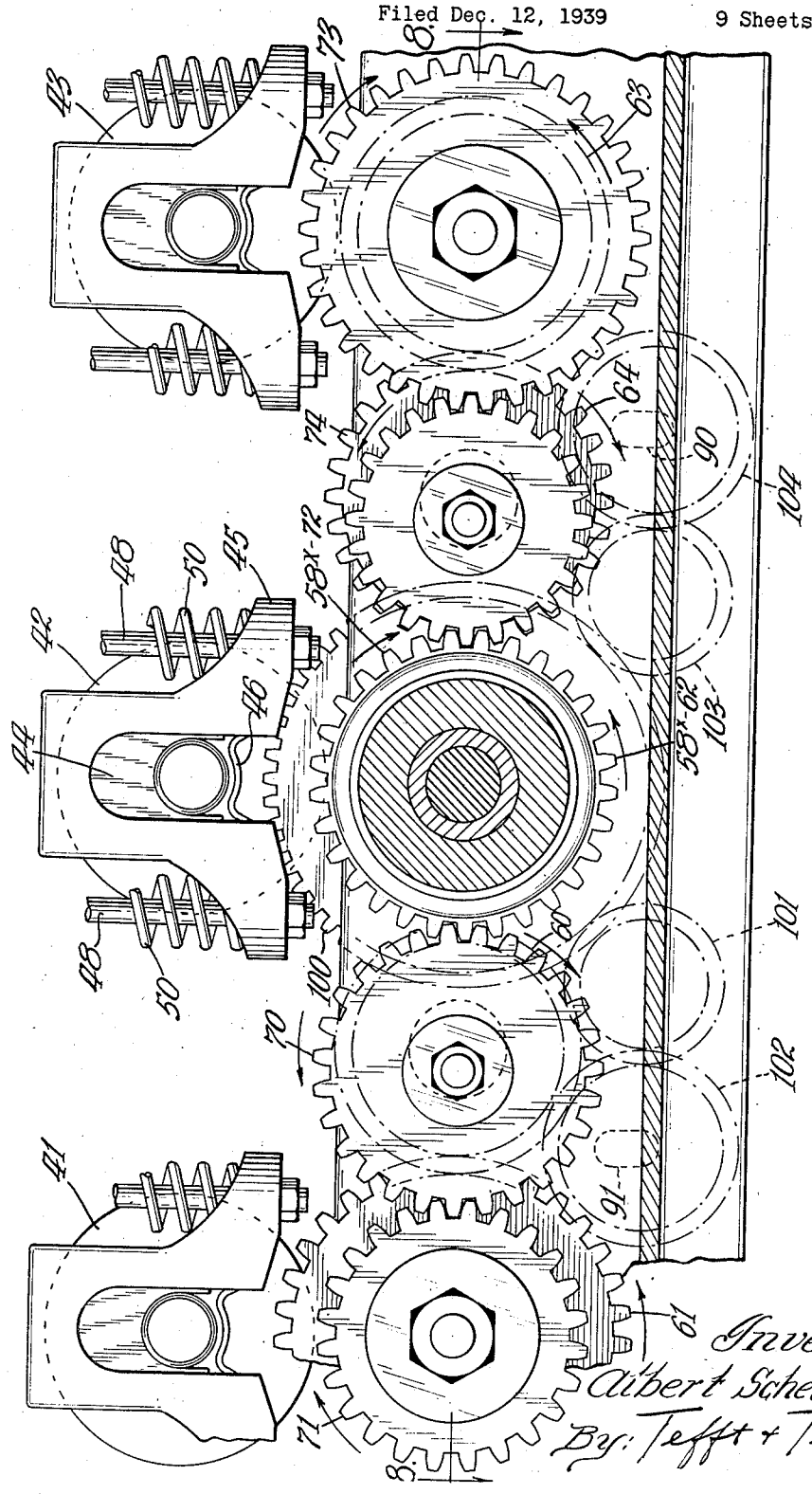

Fig. 7.

Inventor:
Albert Schellenberg
By: Tefft + Tefft
Attys.

Dec. 3, 1940. A. SCHELLENBERG 2,223,860

MULTIPLE ROLL WRINGER

Filed Dec. 12, 1939 9 Sheets-Sheet 7

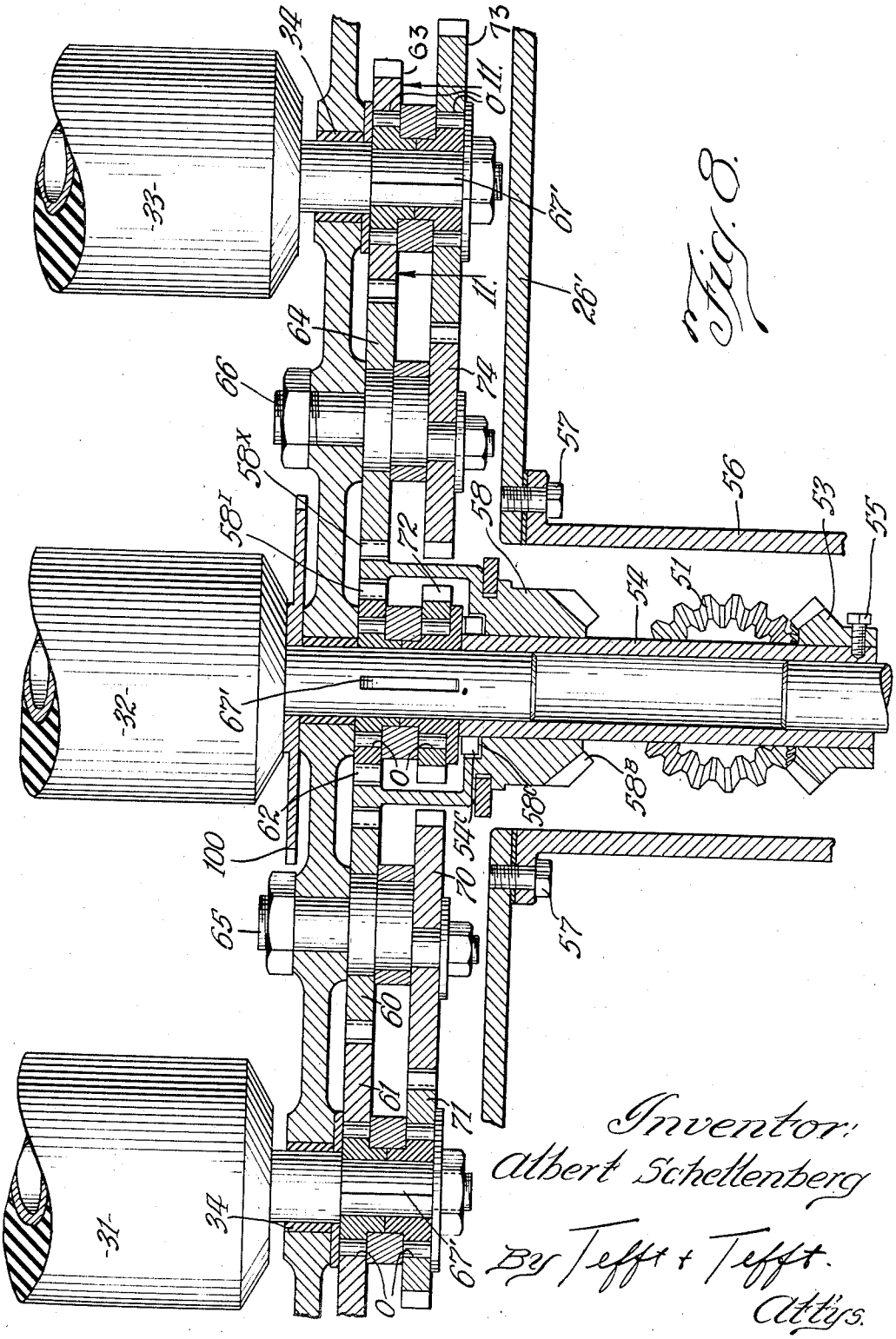

Fig. 8.

Inventor:
Albert Schellenberg
By Tefft & Tefft.
Attys.

Dec. 3, 1940. A. SCHELLENBERG 2,223,860

MULTIPLE ROLL WRINGER

Filed Dec. 12, 1939 9 Sheets-Sheet 8

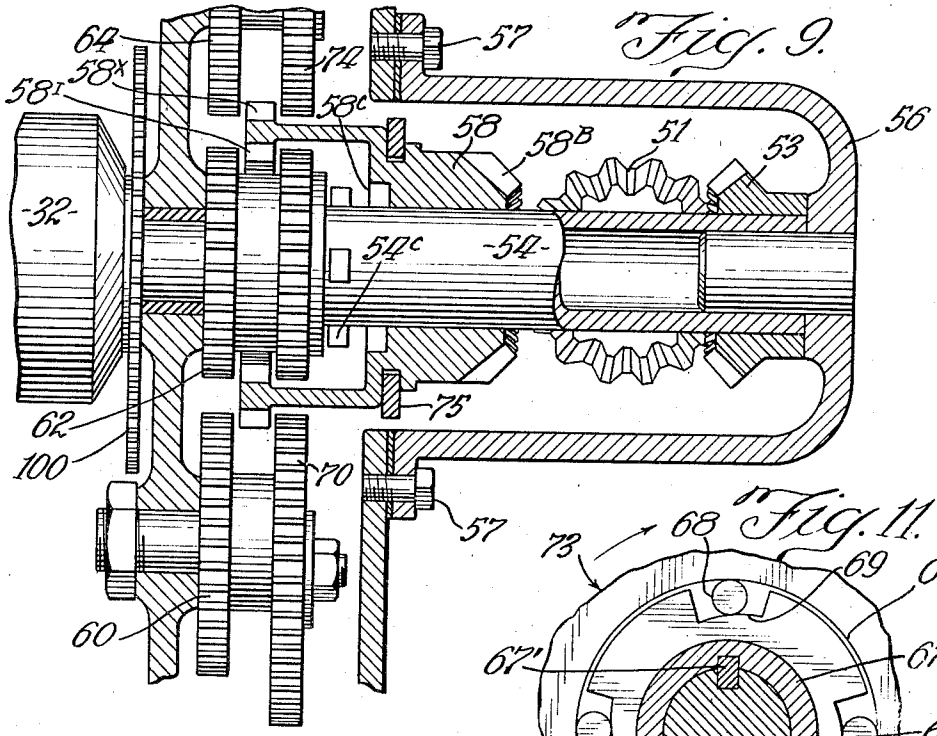

Fig. 9.

Fig. 11.

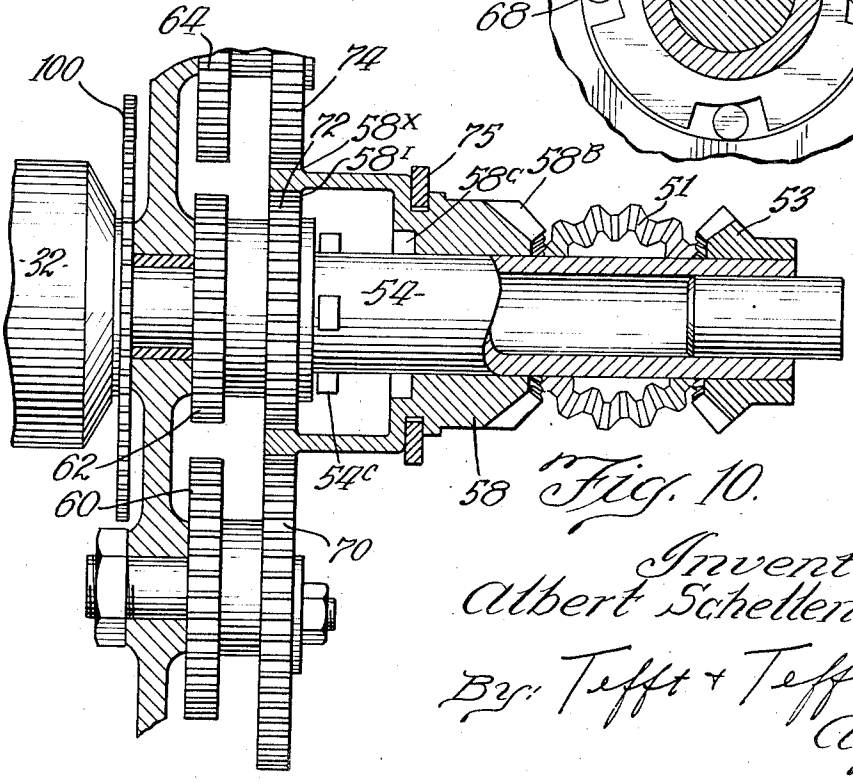

Fig. 10.

Inventor:
Albert Schellenberg
By: Tefft & Tefft.
Attys.

Dec. 3, 1940. A. SCHELLENBERG 2,223,860

MULTIPLE ROLL WRINGER

Filed Dec. 12, 1939 9 Sheets-Sheet 9

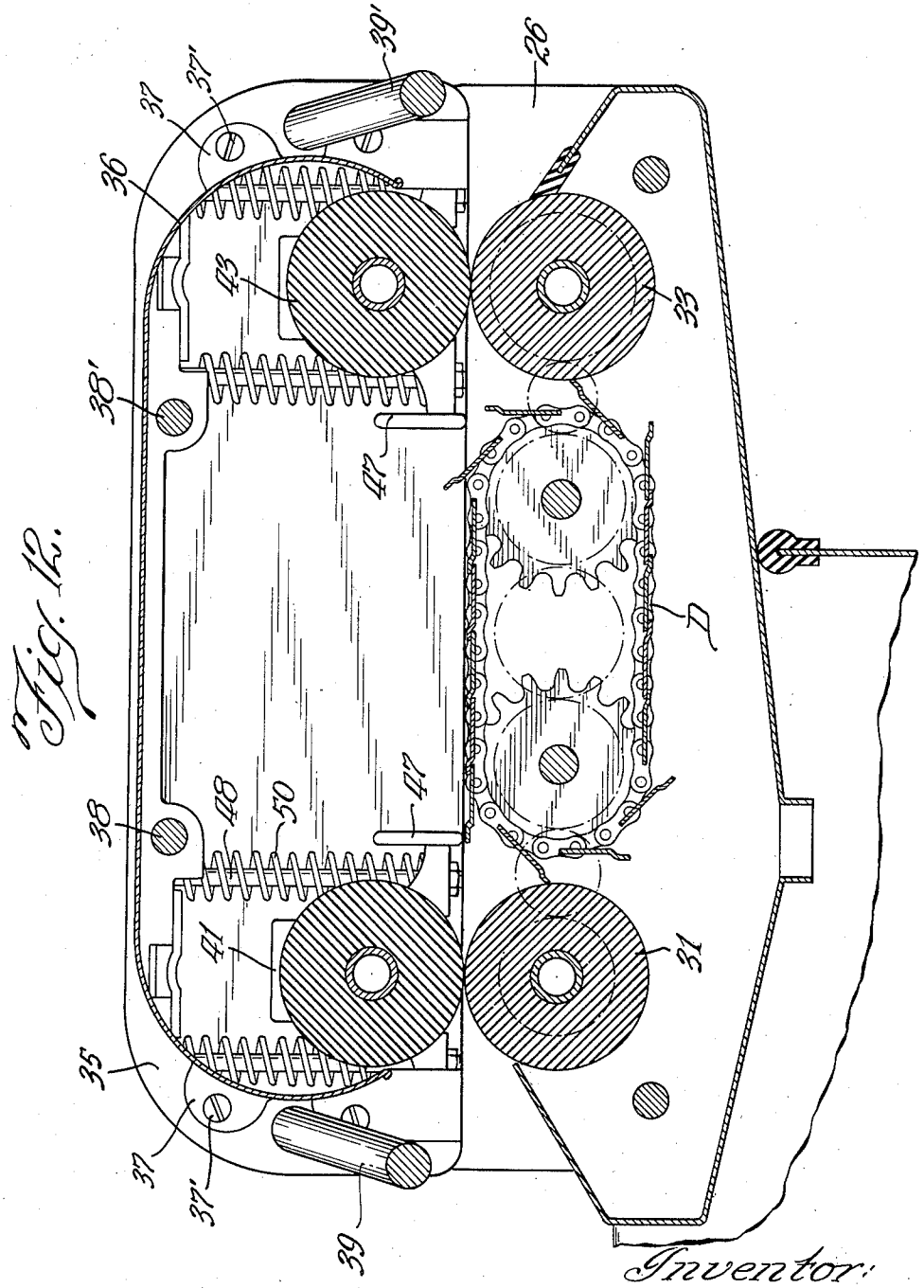

Fig. 12.

Inventor:
Albert Schellenberg
By: Tefft + Tefft.
Attys.

Patented Dec. 3, 1940 2,223,860

UNITED STATES PATENT OFFICE

2,223,860

MULTIPLE ROLL WRINGER

Albert Schellenberg, Joliet, Ill.

Application December 12, 1939, Serial No. 308,781

16 Claims. (Cl. 68—256)

This invention relates to clothes wringers of the type mounted on domestic washing machines and power driven by the washer mechanism.

It has long been recognized in the art that rubber roll wringers of this type are effective adjuncts to domestic washing machines because this auxiliary apparatus materially assists the washing process by compressing the fabric of the wet garments and flushing the soil out of the fabric.

In this connection it has been observed that repeated wringing of the garments results in further expulsion of the water and a decided increase in the cleansing action of the wringer. This effect is noted even when abnormally high roll pressures are used, and is more pronounced when the clothes are struck, agitated, and rearranged between the wringings. It is believed that certain capillary action in relation to the fibers of the cloth, together with the natural sponge action of the compressed fabrics when leaving the pressure rolls, produces an effect which permits the further expulsion of water and soil and thus accounts for the increased drying and cleansing action. It is also believed that the original soapy wash water, with its affinity for soil, retains the soil and thus the more elusive soil is expelled to produce better cleansing and drying. It will also be appreciated that in wringing garments of non-uniform cross section some portions of the garments, particularly the thicker sections, are wrung drier than others or thinner sections which escape the pressure from the bite of the rolls. With the multiple wringing of these garments this result is largely avoided and the garments are more uniformly and thoroughly wrung in all sections.

It is the particular object of this invention to provide automatically repeated wringing operations on clothes fabrics as they leave the washing machine in order to produce drier and cleaner clothes.

Another object is to provide multiple pairs of coacting pressure rolls with the pairs of rolls substantially separated from each other to permit sponge action of the fabric, and automatic means for conveying the garments through the succeeding pairs of rolls.

A further object is to provide in a wringer having multiple pairs of rolls separated from each other, means to loosen or to rearrange the garments as they are automatically conveyed between the pairs of rolls in order to provide for more uniform and thorough drying.

A still further object is to provide wringer structure in a multiple pair roll wringer wherein the upper rolls are mounted in a frame which may be locked with the rolls in pressure relationship to the lower rolls or may be quickly separated from the lower rolls to provide a safe wringer for both the operator and the clothes, as well as to expose the rolls and mechanism for cleaning and adjustments.

A still further object is to provide a removable drain pan for a multiple pair roll wringer which will permit the wash water to be delivered back to the washer tub, or when used in a reverse direction, to permit the expelled water to be returned outside of the washer tub.

Other objects and benefits will be disclosed in the following description and drawings in which:

Fig. 1 is a broken elevational view of a conventional washing machine equipped with my wringer having three pairs of pressure rolls;

Fig. 2 is a top plan view of the washer and wringer as shown in Fig. 1;

Fig. 3 is a broken elevation view showing how the wringer can be removed from the washer and replaced in the opposite position;

Fig. 4 is a longitudinal section of the wringer on the section lines 4—4 of Fig. 2 showing the interior arrangement;

Fig. 5 is a similar view to Fig. 4 but with the top frame and rolls removed to clearly show the lower frame structure;

Fig. 6 is a transverse sectional view of my wringer as it appears on the section lines 6—6 of Fig. 1;

Fig. 7 is an enlarged broken elevational cross sectional view on the section lines 7—7 of Fig. 6, showing the differential gear drive to the rolls as will later be more fully explained;

Fig. 8 is an enlarged broken plan sectional view on the section lines 8—8 of Fig. 7, showing the differential gear drive to the rolls with the inner train of gears being driven, as will later be explained;

Fig. 9 is an enlarged broken plan sectional view showing the gear drive, including the reversible gear head with the drive in neutral or inoperative position;

Fig. 10 is a similar view to Fig. 9 but showing the outer train of gears being driven;

Fig. 11 is an enlarged sectional view of my overriding clutch as it appears on the section line 11—11 of Fig. 8 and which will later be explained; and

Fig. 12 is a longitudinal cross sectional view of an optional wringer structure which will later be explained.

Now referring to the drawings and at the outset particularly to Figs. 1, 2, and 3, I show a conventional domestic washing machine, indicating it generally by the letter A. Mounted on this washing machine is a multiple pair wringer B which is driven by a reversible gear head C from the washer mechanism.

The mechanism is driven by a motor 15 through a conventional gear case 16 driving an agitator 17 in a tub 18. The same mechanism drives the wringer through the vertical wringer drive shaft 20 and the wringer support tube 19, as best shown in Fig. 3. The wringer gear head is pivotally and removably mounted on a pivot 21 and connects with the vertical drive shaft 20 by means of the stub shaft 22 and the drive pin 22' which connects with the drive slot 23 in the vertical drive shaft 20. The wringer is held in the position shown in Fig. 2 by the thumb screw 24 which contacts the slot 25 in the stem 21, but the wringer may be turned 180° to extend sidewise of the tub 18 and is held in this position by the same thumb screw 24 in contact with the slot 25' as shown.

Now referring to Figs. 4, 5, and 6, I show a lower frame structure consisting of two side frame members 26 and 26' fixed in parallel relationship by the cross rod members 27 and 27' and end shield members 28 and 28'. Mounted in this lower frame structure are three lower rolls 31, 32, and 33. These rolls are mounted in suitable bearings 34 of conventional form as partially shown in Figs. 6 and 8.

Mounted on this lower frame structure is an upper frame consisting of two side frame members 35 and 35' similarly joined in parallel relationship by a top shield member 36 which is bolted to the side frames 35 and 35' by bolts 37' through ears 37, as clearly shown in Fig. 4. It will be noted that I provide in the upper central section of the member 36 a glass window 36' mounted in a conventional manner, thus providing an opportunity for the operator to see inside of my multiple roll wringer and observe whether the garments are moving through properly. This structure is further stiffened by rod brace members 38 and 38', as shown in Fig. 4.

Swung at the ends of the top frame member are two cam release bars 39 and 39'. These release bars have semi-circular cam slots 40 and 40' which mount in the cam slot plates 30 and 30', as shown in Fig. 5. This cam bar structure is well known in the art and will not be further described than to explain that when the bars 39 are in substantially vertical position, as shown in dotted outline in Fig. 4, the cams will enter the slots in the plates 30 and 30', and by rotating the bars 180° the cam bars will draw the upper frame downward a distance equal to approximately the diameter of the bars, thus providing means to draw the frames together and place the rolls in co-acting pressure relationship. By reverse movement of the bars 39 and 39' the cams are released from the plates 30 and 30' and thus the rolls are released from pressure relationship.

It will be understood and appreciated that by providing the cam bars 39 and 39', one at each end of my wringer, there is provided means whereby the wringer may be released or reset from either end. This is important in a multiple roll wringer of the type described where the wringer is of substantial width and where it may be operated from either end.

Mounted in the upper frame structure, as described, are three upper rolls 41, 42, and 43 co-acting with the lower rolls 31, 32, and 33, respectively. Now referring to Fig. 7, I will describe the mounting of the roll 42. It will be observed that the trunnion of the roll 42 is carried in a bearing 44 retained by a spring 46 in a bearing bracket 45. Now again referring to Fig. 4, the bearing bracket 45 is retained in substantially horizontal position by ribs 47 in the top frame members 35 and 35'. The bearing brackets 45 are carried by U-bolt 48 attached to the top frame by clamp plates 49. Compression springs 50 surround the legs of the U-bolt 48 and urge the roll 42 downward in pressure relationship with its companion lower roll 32. Similarly, the rolls 31—41 and 33—43 are mounted by similar structure to provide resilient means to hold the rolls in independent co-acting pressure relationship.

Now referring to Figs. 7 and 8, I will describe the gear train drive to the three pairs of co-acting pressure rolls. Fixed in driving relationship to the central roll 32 is a spur gear 62. This spur gear 62, as shown in Fig. 8, is being driven by an internal gear 58I which is integral with an external gear 58X and, therefore, the gear 62 is merely clutched within the gear 58X. Immediately adjacent to its left and meshing with the gear 58X is an idler gear 60 meshing with a spur gear 61 on the trunnion of the roll 31. On the opposite side of the roll 32 is an idler gear 64 meshing with the gear 63 on the trunnion shaft of the roll 33. It will be observed by the sizes of these gears that the roll 33 is driven faster than the roll 32 and that the roll 31 is driven slower than the roll 32.

Referring to Fig. 8, it will be observed that an outer train of gears is arranged to be driven through idler gears mounted on the off-center or eccentric studs 65 and 66. On the central roll 32 is an identical spur gear 72 to the spur gear 62 arranged to be clutched in the internal gear 58I integral with the external gear 58X. When the part 58 is shifted, as will later be explained, the gear 58X meshes on the left with the idler 70 which in turn drives the gear 71 on the roll 31. On the opposite side the gear 58X drives the idler 74 meshing with the gear 73 on the roll 33.

It will be observed that when the rolls are driven in clockwise direction, as indicated by the arcuate arrows intersecting the numeral lines, that the roll 31 is driven faster than the roll 32 and the roll 32 faster than the roll 33. When the rolls are thus driven in clockwise direction, the clothes will be fed from left to right through the wringer or from the tub outwardly. Because the rolls are driven progressively slower, the clothes will be bulged or loosened as they progress from one pair of rolls to the next, and, therefore, the fabric will be moved or rearranged, which provides means whereby the clothes are more effectively and more uniformly wrung. It will also be apparent that inasmuch as the rolls are driven progressively slower, there would be no chance of tearing the clothes by tensioning between the pairs of rolls.

When the wringer is reversed and the rolls driven counter-clockwise through the gears 60, 61, 62, 63, and 64, the opposite effect will be produced—that is, the clothes will be fed from right to left and the roll 33 will be driven faster than the roll 32 and the roll 32 faster than the roll 31.

Now referring to Figs. 6, 8, 9, and 10, I will

describe the reversible gear head drive to the gear trains. Referring first to Fig. 6, it will be appreciated that the stub shaft 22 is driven from the washer mechanism through the pin 22'. This stub shaft 22 drives a metal pinion 51 affixed to the shaft 22 by the pin 52. The bevel gear 51 is held continuously in mesh with a mating gear 53 fixed to a tubular clutch shaft 54 by the set screw 55.

As shown in Fig. 8, the tubular clutch shaft 54 is being driven through the bevel gears 51 and 53 and is in clutched engagement with the part 58 by its external clutch member 54C engaging the internal clutch 58C of the part 58. As shown in Fig. 8, the part 58 is now driving the inside numeral 60 series of gears by means of the integral internal gear 58I being in clutched engagement with the pinion 62 and driving the idlers 60 and 64 through the integral external gear 58X. Now referring to Fig. 10, I show the part 58 shifted inward so that the bevel gear 58B is now meshing with the gear 51 and is driving the numeral 70 series of gears by clutch engagement of the internal gear 58I with the pinion 72 and the integral external gear 58X in meshed relationship with the idler gears 70 and 74. Under these conditions the tubular clutch shaft 54 is out of engagement with the clutch 58C, and, therefore, the drive of the pinion 53 through the tubular clutch shaft 54 is nullified.

Now referring to Fig. 9, I show the shifting element 58 in neutral position wherein the internal gear 58I and the external gear 58X is positioned between the numeral 60 and numeral 70 train of gears and thereby all drive to the wringer is stopped.

The shifting of the part 58 is accomplished by a conventional handle shifter mechanism, as shown in Fig. 6. The shifter mechanism 75 has a yoke connection with the shifter part 58 and is actuated by the handle 76 in a conventional manner.

Now referring to Figs. 11 and 8, I show a conventional overriding clutch device generally designated by the letter O. As shown in Fig. 11, the central section of this overriding clutch 67 is attached to the roll shafts by keys 67'. The internal clutch 67 has cam slots 69 where the internal surface of the cam is angularly arcuate to the internal recess diameter of the gear, and in these cam slots are placed short cam rollers 68. As is well understood in the art, when the gear is revolved in a clockwise direction, as shown in Fig. 11, the rollers 68 will be urged into driving engagement and the roll shaft will be revolved. However, if rotation of the gear is reversed, the rollers will be actuated in an opposite direction and the gear will revolve without rotating part 67 and the roll shaft.

Such overriding clutches are installed in the drive gears mounted on the roll shafts, namely 61—71, 62—72, and 63—73. The cam slots in these clutches are arranged to permit overriding of the roll in the event that the clothes are being pulled faster than the normal drive speed of the rolls. The purpose of this arrangement is to avoid any possibility of tearing clothes by tensioning between the various pairs of rolls as they are fed through my wringer.

Now referring to Fig. 5, I will describe the means I provide to convey the clothes from one pair of rolls to the other while at the same time loosening and rearranging the fabrics for more effective wringing. Mounted on end bars 80 and 80' on the lower frame members 26 and 26' by the bolts 81 is a series of stationary vertical support bars 82, 83, 84, 85, 86, 87, 88, and 89. On the end shield members 28 and 28' adjacent the rolls I affix rubber guard members 28''. On the stationary vertical members 82, 85, 86, and 89 I similarly affix rubber guard members 82', 85', 86', and 89'. It will be apparent that by this stationary structure I have provided means which substantially prevents the clothes falling below the tops of the stationary support members and have also provided structure which prevents the clothes being wrapped around the rolls.

As shown in Fig. 5, I provide rotatable crank arms 90 and 91 on which is mounted a connecting member 92 carrying vertical plate members 93, 94, 95, 96, 97, and 98, interposed between the stationary vertical members, as previously described. When the crank arms are revolved in clockwise direction, it will be obvious that the vertical plates 93—98 will be moved in a rotating movement, as indicated by the arrows, and the plates 93—98 will have the effect of striking, agitating and loosening the garments they contact while at the same time urging them forward through the wringer. It will be apparent that by this structure I have provided means to forcibly agitate, loosen and rearrange the garments to expel foreign matter from the fabric while conveying them through my wringer.

Now referring to Figs. 7 and 8, I show a thin spur gear 100 mounted on the shaft of the roll 32. This gear 100 meshes with idler gears 101 and 103 which drive the gears 102 and 104 which drive the crank arms 90 and 91, as shown. This mechanism is entirely conventional and will not be further explained, it being understood that I have provided gear structure whereby my conveying mechanism is actuated as described.

From the foregoing description it will be understood and appreciated that garments may be wrung through my wringer in either direction with the wringer placed, as shown in Fig. 1, over the washing machine tub or revolved away from or outside of the washing machine tub. Under these conditions it is necessary to provide means to control the discharge of the expelled water and I now desire to explain my drain pan construction. Referring to the drawings and particularly to Figs. 4 and 6, I show a drain pan 110 extending completely under my wringer mechanism. This drain pan is held on the lower frame by means of the bead 110' on the pan and the longitudinal recess 111 and the lower frame members 126 and 126', as clearly shown in Fig. 6. In the lowermost section of the pan I provide two drain cocks 112 and 113. To either of these drain cocks may be attached a drain hose 114. By this arrangement I provide means whereby the drain water may be returned either to the washer tub or to any outside destination as desired through the drain hose 114. As clearly shown in Fig. 4, I provide a rubber sealing member 115 extending over the wall section of the tub 18 to contact the drain pan 110, thus effectively sealing it as well as providing a protective resilient support for the pan. However, it will be appreciated that when the wringer is raised, as shown in Fig. 3, the pan may be completely removed for cleaning both the pan and the under side of the wringer mechanism.

In the foregoing description I have described a preferred embodiment of my invention, but it will be appreciated that various other forms or designs are possible. For this reason I show in Fig. 12 an optional design of a wringer employing only two pairs of rolls with a slat chain conveyor

device D between the two pairs of rolls. The structure, as shown in Fig. 12, is otherwise quite similar to the preferred embodiment of the invention described except that the rolls 32—42 are removed and the conveyor mechanism D inserted. Consideration of the conveyor device D, as shown, will reveal that such a device is practical not only to convey the clothes between the rolls but, owing to the peculiar action of the slats while travelling over the sprockets, the clothes will be agitated or loosened by the conveyor.

Various other designs are, of course, possible, and it will be understood that I do not desire to limit myself to the structure as shown except as such limitations are imposed by the following claims.

I claim:

1. In a clothes wringer, a frame, multiple pairs of spring-urged coacting resilient pressure rolls, spaced apart from each other, mounted in said frame, power transmission means to provide progressively slower roll rotating speeds as the clothes progress through the wringer to effect loosening of the garments, and pressure applying and releasing means whereby roll pressure may be applied or released.

2. In a clothes wringer, a frame, multiple pairs of spring-urged coacting resilient pressure rolls, spaced apart from each other, mounted in said frame, power transmission means to provide progressively slower roll rotating speeds as the clothes progress through the wringer to effect loosening of the garments, conveying means between said pairs of rolls, and pressure applying and releasing means whereby roll pressure may be applied or released.

3. In a clothes wringer, a frame, multiple pairs of spring-urged coacting resilient pressure rolls, spaced apart from each other, mounted in said frame, power transmission means for the rolls, said transmission means including over-riding clutch means to prevent damaging tension on the clothes between the pairs of rolls as the clothes progress through the wringer, and pressure applying and releasing means whereby roll pressure may be applied or released.

4. In an apparatus for wringing clothes, multiple pairs of contacting resilient pressure rolls spaced apart from each other, power means to drive one of each pair of rolls, and other roll of each pair being frictionally driven thereby, and power actuated agitating and loosening means in the space between the pairs of rolls consisting of inverted walking rake mechanism whereby the clothes are subjected to forces applied in a direction other than their direction of travel, but having a resultant effect to urge the clothes forward along their line of travel and into the bite of the succeeding pair of rolls.

5. In a clothes wringer in combination, a frame, lower multiple resilient rolls carried by said frame in spaced relationship, multiple resilient rolls overlying and adapted to peripherally engage said lower rolls, power driven mechanism between the pairs of rolls adapted to receive the clothes from one pair of rolls and by an arcuate striking action to advance the same to the other, means for applying pressure on all the rolls concurrently, a single latch for holding all rolls in pressure relationship and a safety release member for said latch means.

6. In a clothes wringer in combination, a frame, lower multiple resilient rolls carried by said frame in spaced relationship, multiple resilient rolls overlying and adapted to peripherally engage said lower rolls, power driven ejection mechanism between the pairs of rolls adapted to receive the clothes from one pair of rolls and by ejective action to advance the same to the other, said ejection mechanism having movable members for striking and loosening the clothes while being held between dual pairs of pressure rolls, means for applying pressure on all the rolls and a single safety release mechanism for releasing all roll pressure.

7. In a clothes wringer in combination, a frame, lower multiple resilient rolls carried by said frame in spaced relationship, multiple resilient rolls overlying and co-acting with said lower rolls, means for advancing the clothes from one pair of rolls to the other, said means operating at the same time to thump and loosen the clothes while being held between dual pairs of pressure rolls, means for applying pressure on all the rolls, a single latch for holding the rolls in pressure relationship, and a safety release member controlling said latch means.

8. In a clothes wringer in combination, a frame, pairs of upper and lower rolls, said lower rolls being resilient and carried by said frame in spaced relationship, said upper rolls being resilient and overlying and co-acting with said lower rolls, power-driven mechanism for advancing the clothes from one pair of rolls to the other while the clothes are being compressed by dual pairs of pressure rolls, said mechanism being disposed below the bite of the rolls and within the space between the rolls, means for applying pressure on all the rolls, a single latch for holding the rolls in pressure relationship and a safety release member for the latch.

9. In a clothes wringer in combination, a frame, spaced pressure means in the frame, multiple means in spaced relationship for subjecting the clothes to pressure of the pressure means, power-driven means for advancing the clothes between the spaced pressure means including means to thump and agitate the clothes between said spaced pressure means while being held thereby, latch means for holding the pressure means in co-acting relationship, and a safety release member controlling the latch means.

10. The method of wringing clothes which consists of the steps of compressing the clothes while moving the same laterally, passing the clothes across a space, again compressing the clothes and pounding the clothes at a portion thereof within the space while holding other portions in compression, whereby liquids entrained therein are released during the compressing and pounding operation.

11. The method of wringing clothes which consists of the steps of compressing the clothes while moving the same laterally, passing the clothes across a space, again compressing the clothes and striking the clothes at a portion thereof within the space while holding other portions in compression, whereby liquids entrained therein are released during the compressing and striking operation.

12. The method of drying clothes which consists of mechanically, repeatedly, and forcibly forming separated sections of the clothes in compression and expansion while progressively moving the clothes to subject all portions of the clothes to such repeated compression and expansion and to agitate and loosen the clothes in the expanded section while being compressed in separated sections to thereby remove dirt and liquid from the clothes.

13. The method of wringing wet clothes consisting of moving the clothes in one direction while applying pressure on the clothes transversely to the moving direction to remove part of their moisture, passing the clothes across a space while expanding and loosening the clothes by forces applied in a direction other than the direction of their travel and concurrently repeating the pressure operations to further remove moisture.

14. The method of wringing wet clothes which consists of moving the clothes in one direction while applying pressure thereto at two or more spaced points, and mechanically agitating the clothes while the pressure is so applied and during the movement thereof through said space to violently agitate the non-fabric materials within the clothes and to urge the advance of the clothes in the direction of the movement.

15. The method of wringing wet clothes which consists of moving the clothes in one direction while applying pressure thereto at two or more spaced points, and pounding the clothes while the pressure is so applied and during their movement through said space to violently agitate and forcibly eject foreign matter from the fabric of the clothes and to urge the clothes along the path of their travel.

16. The method of wringing clothes which consists of moving the clothes in one direction while applying pressure at two or more spaced points, moving the clothes progressively slower through the pressure points to bulge and loosen the clothes and applying agitating forces laterally to the loosened clothes sections when so held between the pressure points to expel foreign matter from the fabric of the clothes.

ALBERT SCHELLENBERG.