United States Patent [19]

Patrick

[11] **3,905,483**

[45] **Sept. 16, 1975**

[54] **INSTRUMENT MOUNTING RACK**

[75] Inventor: **Ian M. Patrick**, Hatboro, Pa.

[73] Assignee: **Honeywell Inc.**, Minneapolis, Minn.

[22] Filed: **Mar. 18, 1974**

[21] Appl. No.: **452,992**

[52] **U.S. Cl.** **211/177**; 211/176; 211/26

[51] **Int. Cl.**[2] **A47F 5/10**

[58] **Field of Search** 211/26, 103, 105.1, 148, 211/176, 177, 59, 175; 248/27, 165, 214, 216, 223; 403/257, 263

[56] **References Cited**

UNITED STATES PATENTS

918,039	4/1909	Grundmann	211/148 X
2,714,540	8/1955	Diehm	211/148 X
2,760,647	8/1956	Saul	211/13
2,980,381	4/1961	Dectrow et al.	248/223
2,987,195	6/1961	Smith	211/175
3,346,126	10/1967	Bloom et al.	211/176
3,468,430	9/1969	Lawman	211/177 X
3,602,373	8/1971	Cassel	211/177 X
3,606,711	9/1971	Lodato	211/105.3
3,625,372	12/1971	MacKenzie	211/148 X
3,747,777	7/1973	Kane	211/176

FOREIGN PATENTS OR APPLICATIONS

1,517,990	2/1968	France	211/26
348,192	8/1960	Switzerland	211/26
62,605	6/1940	Norway	211/26
92,954	10/1958	Norway	211/26
1,366,899	6/1964	France	211/176
1,431,877	2/1966	France	211/44

Primary Examiner—Roy D. Frazier
Assistant Examiner—Thomas J. Holko
Attorney, Agent, or Firm—Arthur H. Swanson; Lockwood D. Burton; J. Shaw Stevenson

[57] **ABSTRACT**

A versatile instrument mounting rack is made up of a quantity of each one of several prefabricated component parts whereby to rapidly construct numerous types of knock-down frame support structures to facilitate the custom mounting thereon of different arrays of instruments, such as field transmitters. Each such support structure has one or more members that are supported at different heights and which extend in a lateral direction from an upright support or from a wall mounted bracket. Spaced instrument mounting means are provided along each of said members for the mounting of one or more instruments.

6 Claims, 3 Drawing Figures

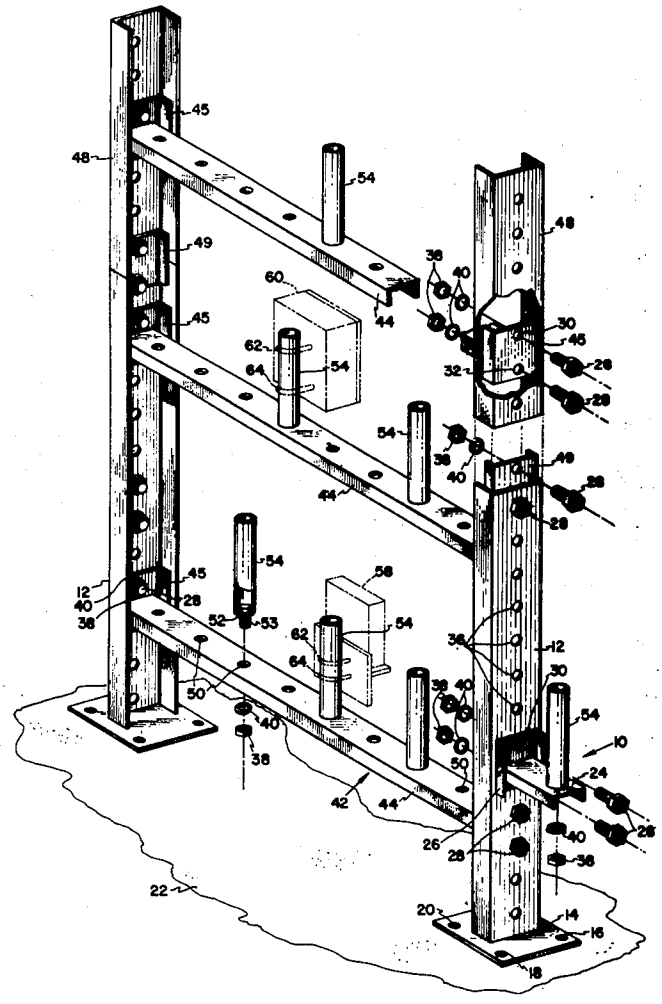

FIG. 1

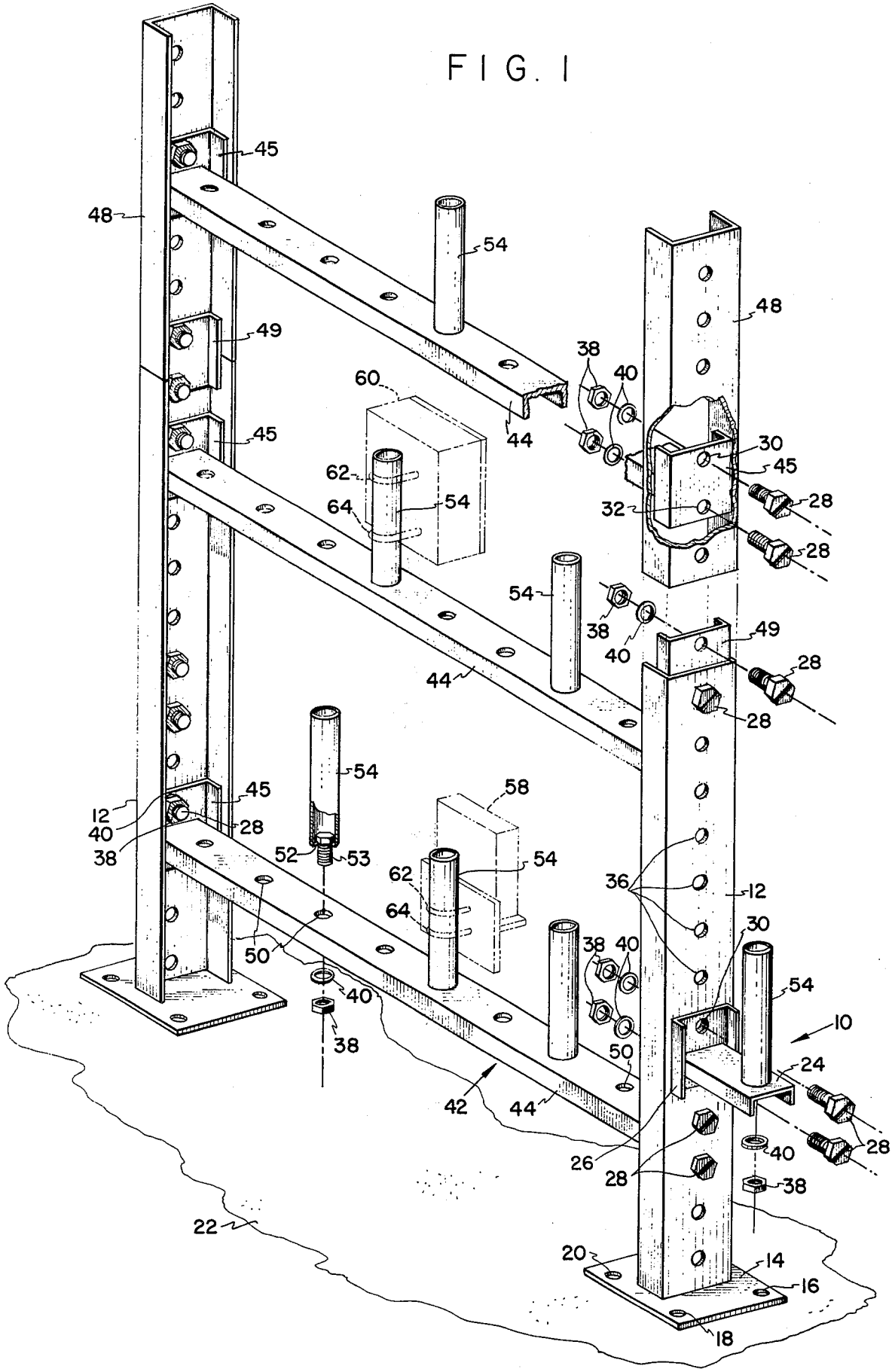
45
48
54
48
49
38
40
60
44
30
45
45
62
54
64
32
28
28
54
38
40
49
28
44
28
54
58
12
40
38
45
28
52
53
54
62
36
12
64
30
50
38
40
40
54
38
10
50
24
42
44
28
26
40
28
38
22
20
14
16
18

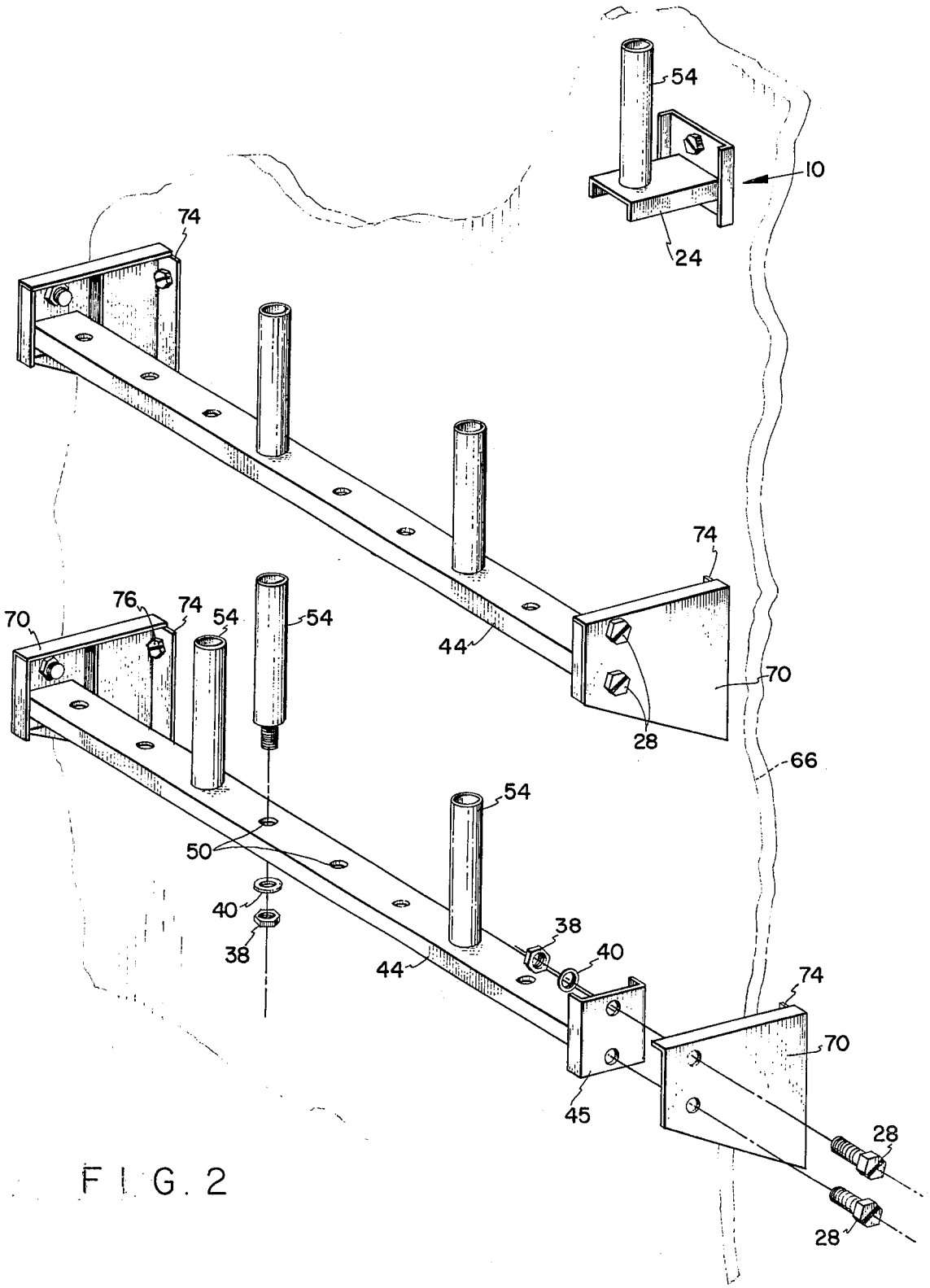
54
10
24
74
74
70
28
66
76
74
54
54
70
44
54
50
40
38
38
40
44
74
70
45
28
28

FIG. 2

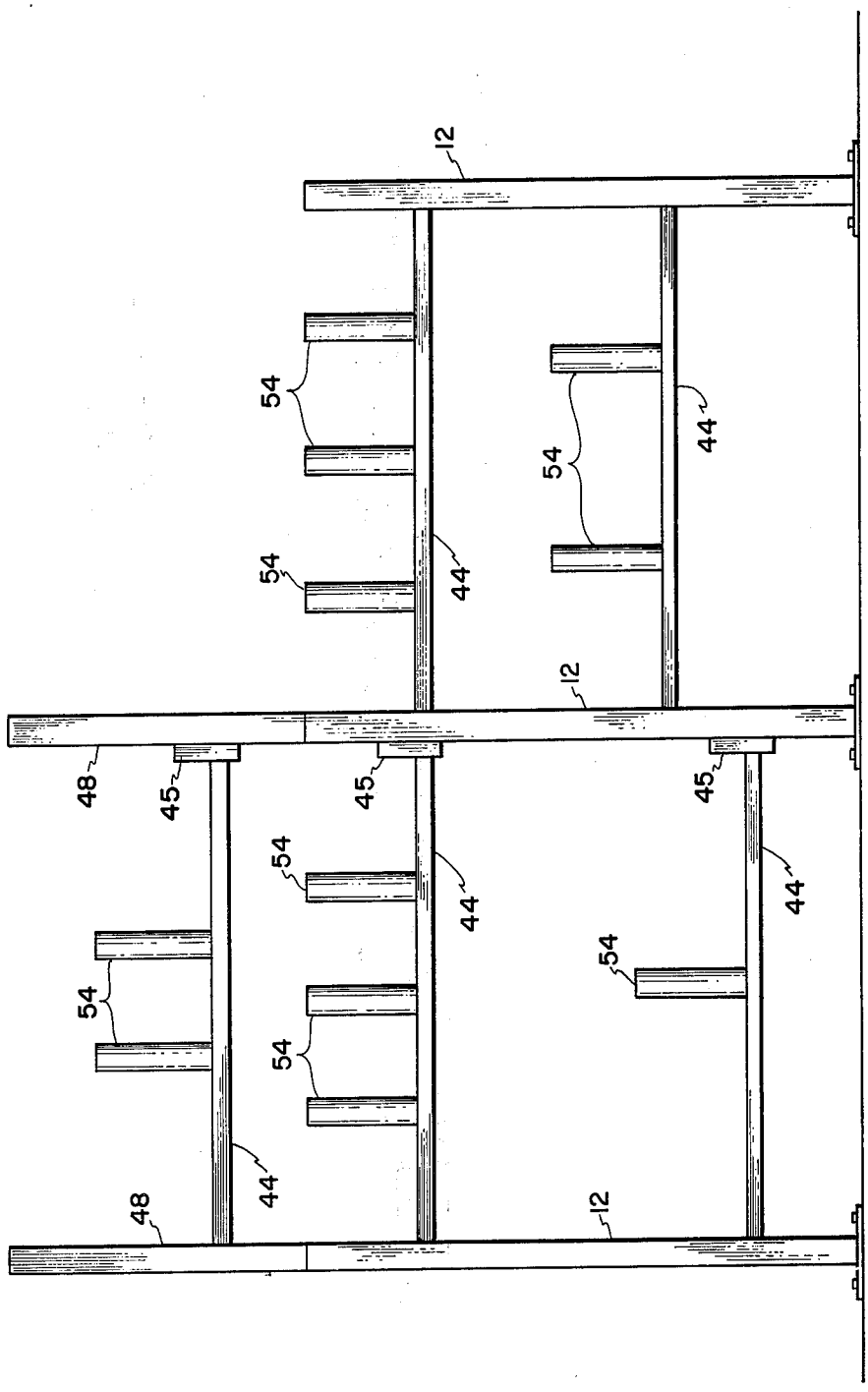

FIG. 3

INSTRUMENT MOUNTING RACK

BACKGROUND OF THE INVENTION

1. Field of the Invention

The invention relates to improvements in frame support structures of the type generally classified in the United States Patent Office with supports, racks, shelf type knockdown.

2. Description of the Prior Art

There have been many different types of custom made support structures that have heretofore been used to mount different objects thereon, such as casing of instruments, particularly transmitting instruments. One example of a prior art custom made instrument support structure that is used for this purpose is shown in the Raymond W. Ross. U.S. Pat. No. **3,035,446.**

The support structure shown in the aforementioned patent employs a custom made panel as a support member. That panel is, for example, provided with precisely cut square, rectangular or other shaped spaced openings therein to accommodate the passage of the different sized instrument cases therethrough and mounted thereon. Each instrument case is thus so positioned that its front end rests on and is supported by the wall forming the opening in the panel while the rear portion of each instrument is supported by brackets mounted on the back face of the panel. Custom made panels of that type also require braces which extend from its back surface to the floor on which the panel is mounted in order to maintain the panel in a supported upright position.

Another example of a prior art support structure that has been used to mount instruments thereon is shown in the Dolan U.S. Pat. No. **3,471,029.**

The instrument supporting structure shown in the Dolan patent includes a pair of spaced uprights. Each upright has one or more custom made dismountable vertical support members of L-shaped cross section mounted thereon which extends away from a vertical surface of each of these uprights. A series of spaced horizontally positioned custom made rails which have characterized recesses therein extend between and are connected at their opposite ends to the vertical support members. The recess formed in each pair of such rails provide a guide means along which associated upper and lower front edges of an instrument casing can be slidably moved to a desired position between the spaced apart uprights.

Prior to the present invention it has thus been the practice of field construction crews to custom build many different types of support frames for the instruments necessary to control an industrial process. In order to build such support frames at an outdoor/indoor construction site it was necessary for those crews to equip themselves with a large quantity and variety of supplies for example pipe, beams, plates, welding rods, etc. as well as the machinery required to cut, punch, bend, trim, weld and assemble those parts into the many different types of required instrument support frames.

One of the problems in building support frames in that manner is the high cost of transporting the aforementioned parts and machinery from one construction site to another and the expense involved in welding those parts together in a prescribed, custom engineered manner.

SUMMARY OF THE INVENTION

It is an object of the present invention to provide an improved instrument mounting rack structure which avoids the shortcomings of prior art instrument racks.

It is another object of the present invention to provide an improved instrument mounting rack structure which is versatile, and easily assembled under field conditions.

It is a further object of the present invention to provide an improved instrument mounting rack structure as set forth which may be readily assembled in any of a number of configurations from a relatively few basic components.

In accomplishing these and other objects, there has been provided, in accordance with the present invention, a frame structure for making any of several different types of instrument support frames. There is included several different prefabricated component parts, selected combinations of which may be rapidly assembled, without welding, to form one of a number of different types of support frame configurations. Each of the aforementioned support frame configurations is provided with at least one laterally disposed component part having one or more openings therein to accommodate the securing thereto of mounting post components. Each of these mounting post components provide a means by which an object such as an instrument can be mounted at any one of several different locations on the aforementioned support frames.

BRIEF DESCRIPTION OF THE DRAWING

A better understanding of the present invention may be had when the following detailed description is read in connection with the accompanying drawing in which:

FIG. 1 is a back perspective view of an improved support frame structure or mounting rack constructed in accordance with the present invention;

FIG. 2 shows a front perspective view of other forms of an improved support frame structure also embodying the present invention and;

FIG. 3 is a front elevation view of another arrangement embodying the present invention.

DESCRIPTION OF THE PREFERRED EMBODIMENT

For an understanding of the preferred embodiment of the invention reference will be first made to FIG. 1.

A support frame structure **10** is shown comprising an assembly of a number of prefabricated structural components including an upright member **12** of a channel shaped cross section. The lower end of the upright member **12** has a foot portion **14** fixedly secured thereto and which foot portion has a suitable number of openings for example **16, 18** and **20** therein to accommodate means, not shown, for securing each foot portion **14** to a floor or other flat supporting surface **22.** A number of spaced holes **36** are formed in the channel of the upright members whereby other prefabricated structural components may be selectively bolted thereto.

A cantilever beam **24** and its associated channel shaped cap **26** are shown, as a component, mounted in a selected position by means of two bolts **28** which pass through aligned openings **30** in the end cap **26** and an adjacent pair of the spaced openings **36** formed in the

upright member 12. The end cap 26 may be secured to the beam 24 as by welding. A pair of nuts 38 and lock washers 40 are shown removably securing the cantilever member 24 to the upright member 12.

Another prefabricated component structure 42 is in the form of a unitary channel shaped cross beam 44 and a vertical channel shaped end cap 45 fixedly secured, as by welding, to each end of the beam 44. Each of the end caps 45 are mounted on and in a supported position against an inside surface of the associated uprights members 12, by means of a pair of bolts 28, a nut 38, and lock washer 40.

A further prefabricated component structure is an upright extension 48, of the same channel shaped configuration as the upright member 12. A channel coupling member 49 is adapted to extend between the inside web surface of each upright member 12 and the associated extension 48. A pair of bolts 28, and associated pair of nuts 38 and lock washers 40 are used to connect each of the upright extensions 48 in a fixed abutting position on the associated upright member 12, as shown in FIG. 1. A cross beam 44 may then be secured between the extension 48 in a manner similar to the connection of the cross beam 44 to the upright members 12.

The cantilever beam 24 structure and the cross beam 44 structure are each provided with one or more spaced holes 50 therein. Mounting post members 54 may be selectively secured to either the cantilever beam 24 or the cross beam members 44 at any of the provided holes 50. To this end, as shown in FIG. 1, the mounting post members 54 are provided with a threaded stud 53 extending from one end thereof and secured to the post member 54 as by a web member 52 to form a unitary structure.

The stud 53 extends from the lower open end of the post 54 and is of a size to readily pass through the hole 50 in either the cantilever beam 24 or cross bar 44. A nut 38 and a lock washer 40 retain the post member 54 securely on the support beam members.

Most of the process measuring, indicating and controlling instruments which are designed for field mounting applications, include means for mounting such instruments on a vertical pipe or the like, such as are frequently available at the process site. As schematically represented in FIG. 1, several such instrument cases 58, 60 are shown. Each of these cases is secured to a mounting post 54, in one way or another, by a pair of U-bolts 62 and 64 clamped about the mounting post. One suitable form of such U-bolt mounting clamping means is shown in U.S. Pat. No. 2,980,381.

In FIG. 2, there is shown alternative arrangements of the components shown in FIG. 1. For example, a cantilever component 10, such as was shown attached to one of the upright members 12 of FIG. 1, is shown in FIG. 2 secured to a wall or panel 66.

Also shown in FIG. 2 is a pair of wall brackets 70, between which a cross beam 44 may be secured. Each of the brackets 70, includes a back flange 74 with suitable holes through which a pair of mounting bolts 76 may be inserted. The mounting bolts provide means for attaching the brackets 70 to the wall or panel member 66. As in the case of the structure illustrated in FIG. 1, the cross beam 44 together with the end caps 45 are secured between the wall brackets 70 by means of the aforementioned bolt 28, nut 38 and lock washer 40.

In FIG. 3 there is shown the components of the present invention arranged in a somewhat different configuration wherein a third upright member 12 is provided. One or more cross-beam members 44 are connected, as before, between the third upright member 12 and one of the other upright members 12. Accordingly, the structure shown in FIG. 2 further illustrates the versatility of the apparatus of the present invention in that more than one lateral section of support structure may be assembled from the same types of basic components as were used in the structure illustrated in FIG. 1. While a single additional section of support structure has been illustrated, it is apparent that in the event of a need for a large number of field instruments being mounted at the one location, further sections of the support structure could be added without departing from the spirit and scope of the present invention. As in the previously discussed configurations both the upright members 12 and the cross-beam members 44 are provided with a series of spaced holes. Again, a number of mounting posts 54 on which instruments may be mounted are secured, as before, at selected locations on the support structure.

Thus there has been provided, in accordance with the present invention, an improved instrument mounting rack structure which is versatile, easily assembled under field conditions and which is relatively simple and inexpensive.

The embodiments of the invention in which an exclusive property or privilege is claimed are as follows:

1. Instrument mounting structure comprising an assembly of prefabricated component members, said component members being readily assembled in any of a plurality of structural configurations, said component members comprising a plurality of elongated upright support members formed of channel shaped cross-section, each having an associated foot portion integral with one end thereof, horizontal members each formed of an elongated inverted channel shaped cross-section, said inverted channel having identical channel shaped caps each integral with and surrounding a different opposite end thereof, mounting post members each having a threaded stud integral therewith which extends from one end thereof, the channel forming each upright support member having a plurality of relatively uniform spaced holes in the web portion thereof, the space between opposite flange portions of each of said channel shaped cap members being of a smaller dimension than the space between opposite flange portions of said channel shaped upright support members, thereby allowing the outer web surface of each of said cap members to be positioned in physical surface-to-surface contact with the inner web surface of any one of the channels that forms said upright members, said channel shaped cap members having at least two holes extending through each of their web portions that are in the same spaced relationship as the holes in said upright member, said holes in said cap members being adapted for alignment with selected ones of the holes in the web of said upright support members whereby said web of said caps of any one of said horizontal members may be selectively positioned and attached by suitable bolt and nut attaching means to the web of said associated channel shaped upright support members, each of said horizontal inverted channel members having at least two holes through its web-portion; and

said threaded stud extending from one end of each of said post members being positioned for insertion in a vertical position in any one of said holes in any one of said horizontal members whereby said stud end of any selected one of said post members may be selectively mounted in a vertically supported position on its associated horizontal member and removably secured thereto by means of said stud and an associated nut attaching means, said mounting post members being adapted to have at least one process instrument mounted thereon.

2. Instrument mounting structure as set forth in claim 1 wherein the end cap at each end of said horizontal members in one of said structural configurations are secured between two of said upright members; and

wherein said holes through the web portion of each of said horizontal inverted channel members are uniformly spaced therealong, whereby said mounting post members and the instruments associated therewith may be supported and secured in equally spaced apart positions along the longitudinal web surface of each of said horizontal members.

3. Instrument mounting structure as set forth in claim 1 wherein in one of said structural configurations one of said caps on one end of one of said horizontal members is secured by its said bolt and nut connections to one of said upright members and the remaining portion of said horizontal member extends therefrom to thereby form a cantilever beam on which said post members and their associated instrument are supported.

4. Instrument mounting structure as set forth in claim 1 wherein said prefabricated component members include additional upright extension members of the same channel shaped cross-section as said upright members, and an additional perforated cap shaped member forming channel shaped coupling members for coupling an end of said upright extension members in end to end relationship to the upper end of said upright members, said extension members having a plurality of relatively uniformly spaced holes through the web portion of said channel whereby said caps on the ends of additional horizontal members may be secured thereto in the same manner as said upright members are connected to their associated horizontal members.

5. Instrument mounting structure as set forth in claim 2 wherein said structure includes more than two of said upright members spaced from one another and having additional horizontal channel members secured to and extending between adjacent ones of said last-mentioned upright members.

6. Instrument mounting structure comprising an assembly of prefabricated component members, said component members being readily assembled in any of a plurality of structural configurations, said component members including at least one upright support member formed of channel shaped cross-section, having a plurality of relatively unformly spaced holes in the web portion of said channel, and a foot portion integral with each one of said support members;

horizontal beam members, that are each of an inverted channel shaped cross-section, end cap members that are each of a channel shaped cross-section, one of said end cap members being integral with and surrounding each end of said beam member and having a plurality of holes extending through each of their web portions, said holes in said cap members being adapted for alignment with selected ones of the holes in the web of said upright support member whereby the ends of said horizontal members are of a dimension to be selectively positioned and attached to said upright support member at a position within the opposing flanges of said lastmentioned member, each of said channel shaped horizontal members having at least two holes through its web portion; and

a mounting post member having a threaded stud that has a non-threaded end thereof integral with the base of said post member and a threaded end thereof extending therefrom, said threaded end of said stud being positioned for insertion in any selected one of said holes in said horizontal members whereby said stud end of said mounting post member may be selectively positioned against the web of said horizontal member and in supporting surface-to-surface engagement therewith and secured in said last-mentioned position to said horizontal member by said threaded stud and a nut, said mounting post member being adapted to have a process instrument detachably connected to a vertical wall portion of said mounting post member.

* * * * *