May 16, 1939. S. P. DENSMORE 2,158,617

EVACUATING ECONOMIZER FOR CLOTHES PRESSING MACHINES

Filed Aug. 16, 1937

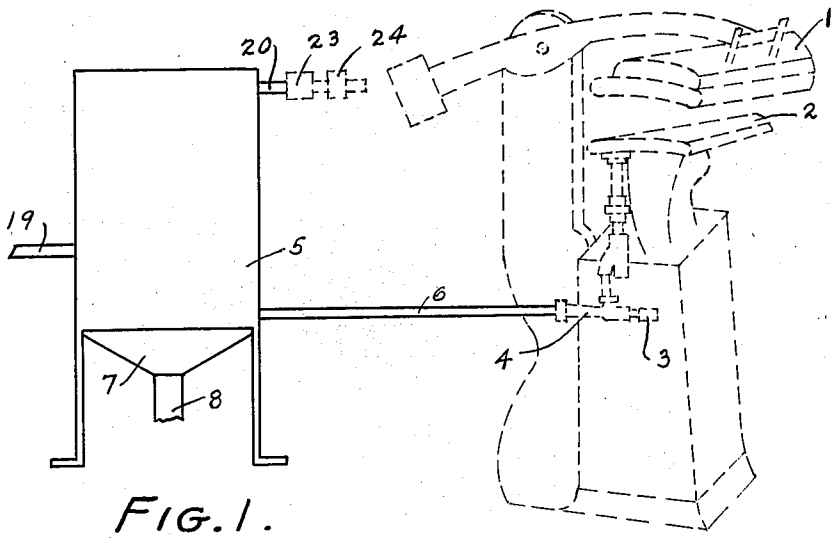

FIG. 1.

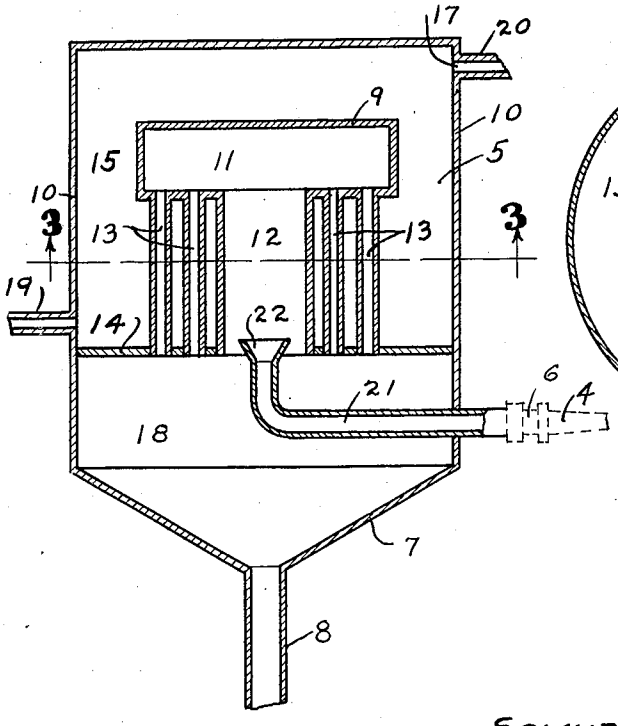

FIG. 2.

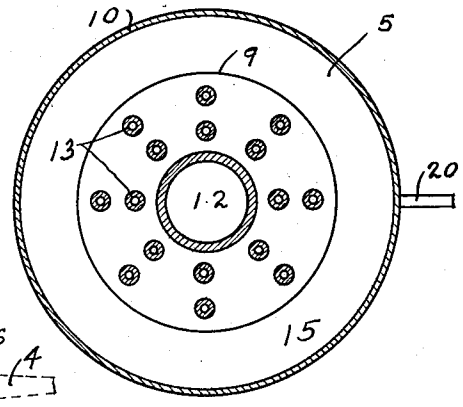

FIG. 3.

Inventor

SAMUEL PARKER DENSMORE.

By Howard J. Whelan.

Attorney

Patented May 16, 1939 2,158,617

UNITED STATES PATENT OFFICE

2,158,617

EVACUATING ECONOMIZER FOR CLOTHES PRESSING MACHINES

Samuel Parker Densmore, Baltimore, Md., assignor of fifty per cent to Marlin Evans Smith, Baltimore, Md.

Application August 16, 1937, Serial No. 159,410

2 Claims. (Cl. 257—28)

This invention refers to laundry equipment and more particularly to an evacuating economizer for clothes pressing machines. It has among its objects to provide an arrangement that will eliminate "free" steam in its use; to utilize the used steam of the device for heating purposes combined with the operation of the pressing machine and thereby increasing its thermal efficiency; to have the arrangement free of back-pressure objections that might affect the proper utility of the device and the pressing machine connected with it; to have the arrangement compact and conveniently adapted for its particular functions; and other objects that will become apparent as the invention is more fully set forth.

In the use of hand pressing machines used for pressing and finishing off clothes and known as those of the buck type, steam at substantial pressure is used. This steam serves the purpose of heating the head; dampening the cloth to be pressed; and to provide a suction arrangement for drawing steam vapor and air from the clothes pressed. In the last case, the steam is passed to an injector type of device, that is usually called a vacuum Venturi assembly, and serves to draw the steam, vapor and air through the clothing, buck table and incidental piping, through an exhaust pipe. The steam is normally exhausted to the air from the exhaust pipe and is termed "free" steam. Exhausting "free" steam to the atmosphere is objectionable in several ways and is forbidden in many localities. To meet this situation various crude methods have been used to divert the steam so it could not be noticed, such as extending the exhaust pipe above the roof, or into a sewer pipe. This last pretext is also objected to and forbidden by authorities who have jurisdiction, over the premises.

To avoid such objections, this invention has been developed. At the same time practical use of the wasted steam is made. For this purpose, a special unit has been designed, that takes the waste steam and utilizes its thermal energy to heat up the water to the boiler from which the steam is taken. It economizes the heat. However in using this heat, steps have been taken to avoid back pressure results that would impair the efficiency of the vacuum Venturi assembly. In addition the condensation from the used steam is brought to a predetermined location, whence it is passed off to the sewer pipes in a harmless and unobjectionable manner.

In the drawing which illustrates an embodiment of this invention:

Figure 1 indicates an evacuating economizer unit embodying this invention, in connection with the outline of a conventional pressing machine.

Figure 2 is a vertical sectional detail through the economizer unit.

Figure 3 is a horizontal sectional view through the economizer unit taken along line 3—3 of Figure 2.

Similar reference characters refer to similar parts throughout the drawing.

In the drawing, the outline of the pressing machine indicates a head 1; a buck table 2, and steam connections 3, which serve the machine. The vacuum Venturi assembly is shown at 4, and connects with the evacuating economizer unit 5, through a pipe 6. The unit 5 is preferably of cylindrical form with a funnel shaped bottom portion 7, into which a pipe 8 is attached. The pipe 8 is connected preferably with the sewer or sanitary system and serves to carry off the cooled condensed water from the unit 5. The unit consists of a cell 9, centrally located in the same with the walls 10 of the unit completely surrounding and enclosing it. The cell is preferably built as shown with an upper enlarged space 11, leading off a central passage 12 which is open to the funnel bottom portion 7. A series of tubes 13 lead off from the space 11, and continue vertically down to the funnel portion 7, through the separating plate 14, which divides the unit into water and condensation compartments 15 and 18, respectively. The walls of the water compartment 15 are provided with water supply pipe inlets 16, for water to be heated in the unit, and outlets 17, for the heated water to pass to the boiler used with the system. To these inlets and outlets, pipe connections 19 and 20 are attached respectively.

A "free" steam pipe 21 connects with the pipe 6, and extends through the condensation compartment 18, to the central passage 12 where it bends up slightly as indicated in the drawing. This pipe is relatively small compared with the diameter or area of the central passage, and opens up into an expanding member 22, which serves to muffle the sound of the exhausing steam, and eliminates back pressure, as well as increases the tendency to condense quickly. This member is kept as low as practical in the passage to permit as much use of the exhaust steam as possible. Several pressing machines can be connected to the same evacuating economizer.

In operation, the water compartment 15 of the unit is filled with water from an outside service, and connects with the boiler, in a suitable man-

ner, the usual check valves **23**, and feed water devices **24**, etc. as required being used. The steam for the vacuum Venturi assembly **4** is passed through same, and in doing so draws air and steam through the buck table **2** in the conventional manner. The mixture of air, vapor and steam from the buck table connection passes through the pipe **21**, and expanding member **22**, into the central passage **12**. The steam mixture expands in the central passage and thereby prevents back pressure developing, and passes through to the upper space **11**. While in this situation, the walls of the central passage and upper space conduct the heat from the steam to the water, in the water compartment **15**, which absorbs it. The water of condensation then drops down along the walls and passes through the tubes **13** and central passage **12**, into the funnel portion **7**, where it collects into the outlet pipe **8** and passes to the sewer or other waste line. The expanding steam at the nozzle lowers its temperature and precipitates its moisture and causes the steam to flow through the enlarged central tube **12**, with lower velocity. The steam space element **11** further increases the expansion of the remaining steam and lowers the rate of flow, while the cooling liquids surrounding same act to condense it quickly. The nozzle is less than the width of the central tube passage and thereby does not obstruct the water draining down its walls, into the lower portion of the casing and the funnel. As the condensed water streams down the walls of the tubes **13**, it gives up more of its heat.

This action takes place as long as the unit is used, and enables the water to be supplied to the boiler at a high temperature with the incidental increase in efficiency and decrease in cost of operation and fuel.

While but one form of the invention is shown in the drawing, it is not desired to limit this application for patent to the particular construction shown, other than limited by the prior art, as it is appreciated that other forms might be made, using the same principles and coming within the scope of the appended claims.

Having thus described the invention, what is claimed is:

1. A condenser of the class described, comprising in combination a casing adapted to form the outer wall of the condenser and having a bottom portion with outlet therein, a plate for dividing the casing into a water chamber and a condensate compartment, a cell disposed within the water chamber and exteriorly in contact with the water thereof, a plurality of steam condensation tubes, means forming a relatively large tubular passage, said tubes and tubular passage extending between and opening through said separating plate and a lower wall of said cell, the walls of said tubes and tubular passage being exteriorly in contact with the water of the water chamber, and a steam inlet pipe extending through the casing into the tubular passage and having a flaring inner end for delivering the steam to be condensed into said tubular passage and towards the said cell and against the upper surface thereof to be cooled and in part condensed and thence passed through said condensation tubes into the condensate compartment, there being a space between the walls of said passage and the inner end of said pipe to allow for recirculation of uncondensed steam from said condensate compartment.

2. A condenser of the class described, comprising in combination a casing adapted to form the outer wall of the condenser and having a bottom portion with outlet therein, a plate for dividing the casing into a water chamber and a condensate compartment, a cell disposed within the water chamber and exteriorly in contact with the water thereof, a plurality of steam condensation tubes, means forming a relatively large tubular passage, said tubes and tubular passage extending between and opening through said separating plate and a lower wall of said cell, the walls of said tubes and tubular passage being exteriorly in contact with the water of the water chamber, and a steam inlet pipe extending through the casing into the tubular passage and having a flaring inner end at the inlet portion of said tubular passage for delivering the steam to be condensed into said tubular passage and towards the said cell and against the upper surface thereof to be cooled and in part condensed and thence passed through said condensation tubes into the condensate compartment, there being a space between the walls of said passage and the inner end of said pipe to allow for recirculation of uncondensed steam from said condensate compartment.

SAMUEL PARKER DENSMORE.