May 29, 1962 M. O. MARSH ET AL 3,037,177

STATIONARY INDUCTION APPARATUS

Filed Dec. 12, 1957 2 Sheets-Sheet 1

Fig. 1.

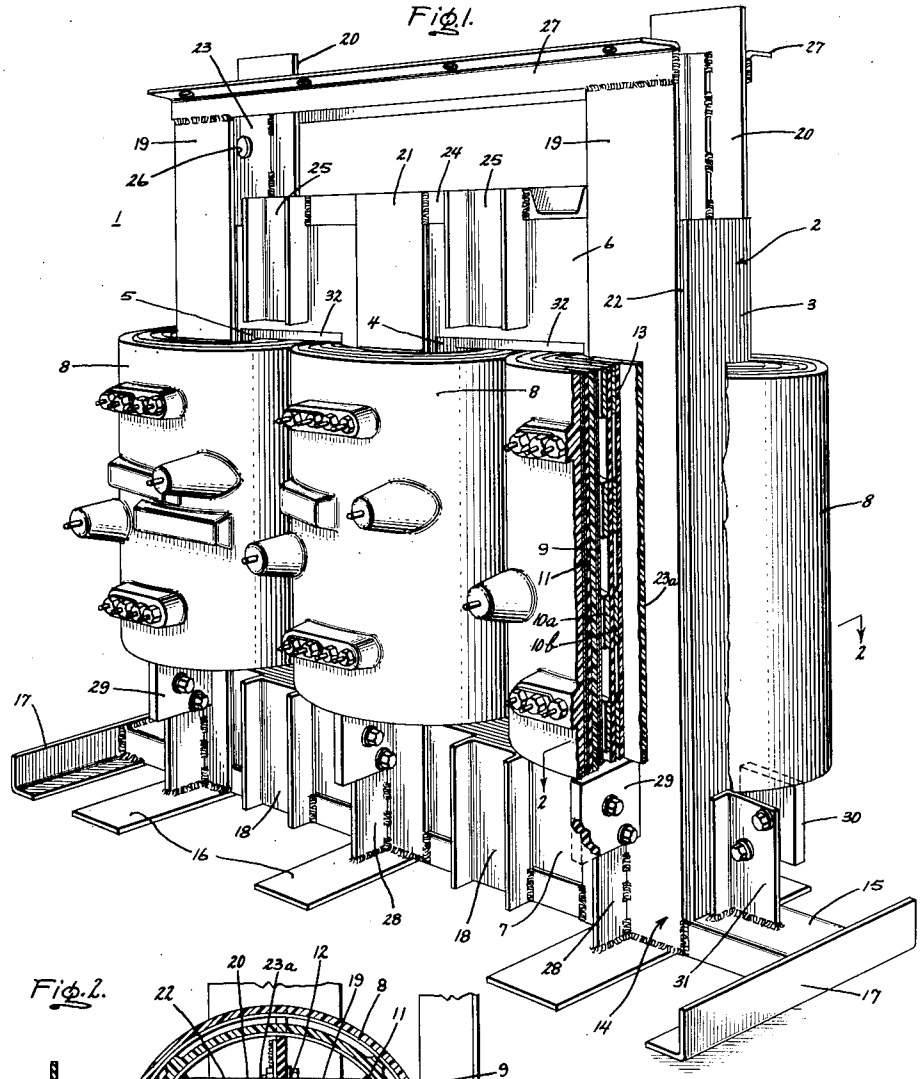

Fig. 2.

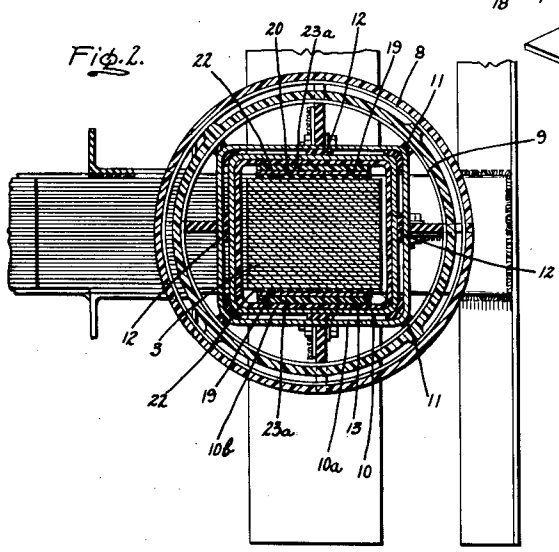

Inventors:
Homer C. Meeker,
Myrle O. Marsh,
by H. F. Maulbeck, Jr.
Their Attorney.

May 29, 1962 M. O. MARSH ET AL 3,037,177

STATIONARY INDUCTION APPARATUS

Filed Dec. 12, 1957 2 Sheets-Sheet 2

Fig. 3.

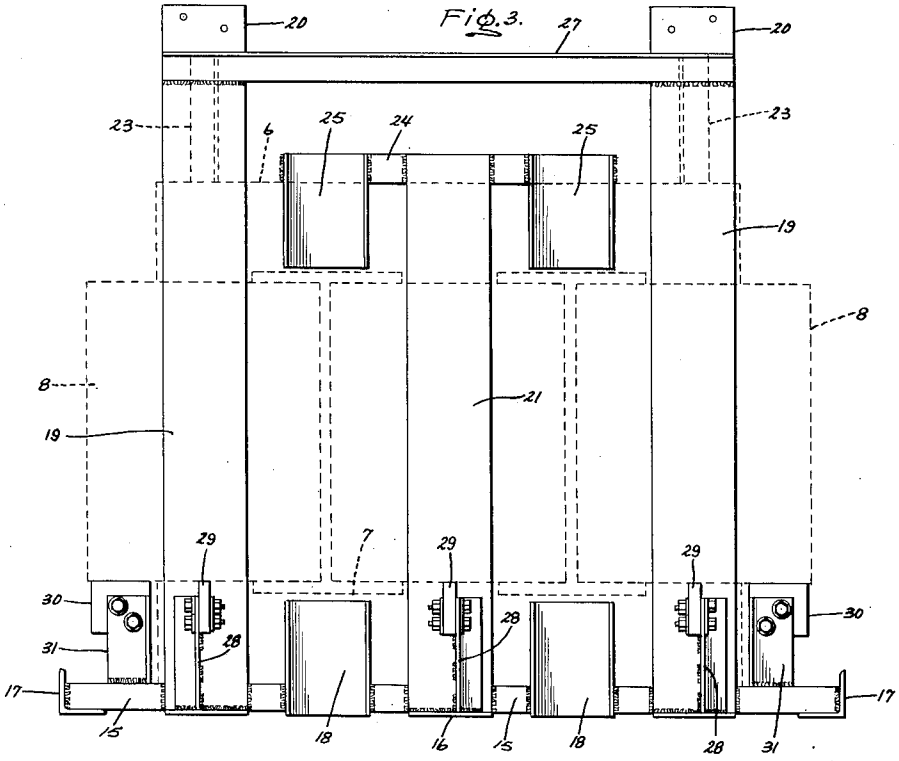

Fig. 4.

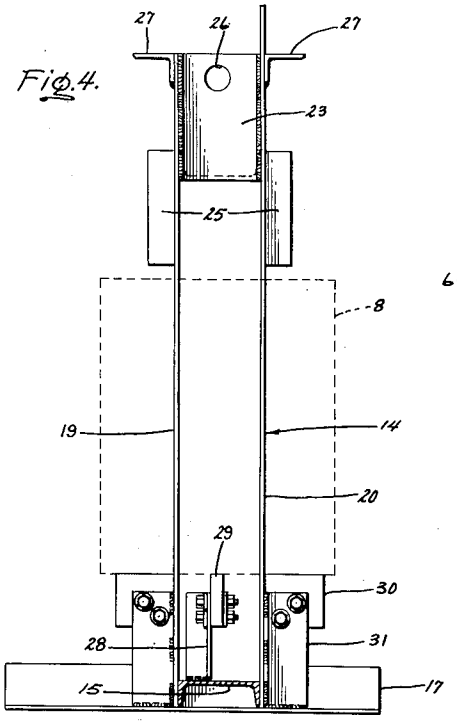

Fig. 5.

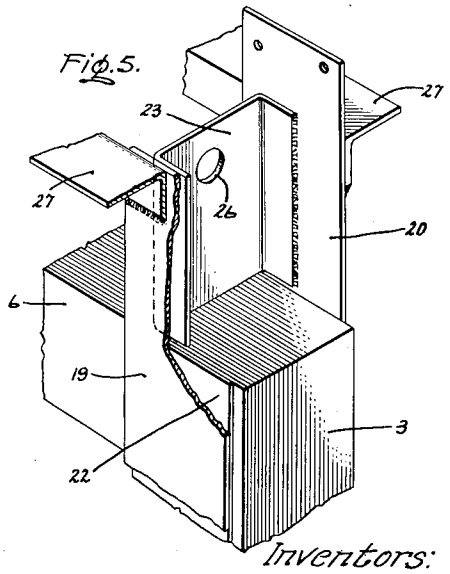

Inventors:
Homer C. Meeker,
Myrle O. Marsh,
by H. F. Manbeck Jr.
Their Attorney.

United States Patent Office 3,037,177 Patented May 29, 1962

3,037,177

STATIONARY INDUCTION APPARATUS

Myrle O. Marsh and Homer C. Meeker, Fort Wayne, Ind., assignors to General Electric Company, a corporation of New York

Filed Dec. 12, 1957, Ser. No. 702,297
7 Claims. (Cl. 336—210)

Our invention relates to stationary induction apparatus of the type including a laminated core, and more particularly to an improved apparatus of such type including a rigid frame arrangement for supporting and clamping the core.

In large stationary induction apparatus, such as, for example, large dry-type transformers, the core laminations are ordinarily formed of grain oriented steel so as to reduce the magnetizing losses in the core. By grain oriented steel we, of course, mean steel in which the grain is oriented or arranged in a particular direction as a result of the manner in which it is rolled during its reduction from ingot form. In the transformer core the laminations are assembled so that the grain coincides with the direction of the magnetic flux path through the laminations. This results in a comparatively low core loss as compared with a core formed of steel in which the grain is not oriented.

Grain oriented steel is, however, very sensitive to bending or flexing. If the laminations are bent or flexed as a result of uneven pressures applied during the assembly of the core or during the handling of the core, their characteristics will be changed so as to increase the core loss when the apparatus is placed in operation. In the conventional apparatus now available, core bolts are used to hold the cores together, and there is necessarily a concentration of pressure at the bolt holes. This pressure at the bolt holes flexes the laminations somewhat with an adverse effect on core loss for the reason mentioned above.

A further factor increasing the magnetizing losses in these bolted cores is the stressing of the laminations resulting from the lifting of the cores. The cores being securely bolted together are ordinarily lifted through the laminations themselves. In other words when a bolted core is picked up by a crane or other handling device, it is picked up from the top and the lifting force is transmitted to the lower portion of the core through its legs. This stresses the laminations, perhaps causing them to flex or shift, and also increases core loss.

It would obviously be advantageous if a transformer construction were available which would eliminate these two causes of increased core loss, i.e., the bolt pressures and the lifting stresses, without introducing any other substantial losses, and our invention is generally directed toward the provision of such a construction. In this regard, it is an object of our invention to provide a new and improved frame arrangement for clamping and supporting the core laminations of a transformer, which frame arrangement eliminates the aforementioned pressures and stresses and is itself so arranged that it does not add any substantial magnetizing losses to the transformer.

It is another object of our invention to provide a new and improved frame arrangement for supporting and clamping the core of a transformer, in which arrangement the structural members themselves are effective to limit the magnetizing losses without any special flux shorting means being required.

In carrying out our invention in one form thereof, we provide a transformer having a laminated core member which includes a plurality of vertically extending legs and top and bottom yokes connecting the legs. Electrical coils are disposed on the core legs, and a rigid frame is provided for supporting and clamping the core member and

the coils. This frame includes a base girder which is disposed under the bottom yoke of the core for supporting it; and it further includes a pair of flat straps or clamps for clamping together the laminations of each of the core legs. The straps are disposed on opposite sides of their associated legs, and engage the sides to clamp the laminations together with an even pressure throughout the length of the legs. The straps are fixedly secured to the base girder at their lower ends, and at their upper ends they are secured together by means of a suitable cross bar or tie. The cross bars engage the upper surface of the top yoke to prevent the shifting thereof and they are so arranged that a lifting force may be applied to them. As a result the transformer may be lifted as a whole through the straps and base girder of the frame without any stress being applied to the core member.

Besides the base girder and the clamping straps, the frame further includes horizontally extending stiffening means which rigidly secure together the straps associated with the outer core legs so as to prevent shifting of the straps and the legs during lifting. These stiffening means are substantially smaller in cross section than the straps and thereby reduce the magnetic flux density in the straps and the frame during the operation of the transformer. This keeps the core loss in the frame to a negligible value.

With this construction it will be seen that the core laminations are not bent or flexed either as a result of the asembly of the transformer, or during the handling of it. Since the straps or clamps of the frame extend for the length of the core legs, they do not pinch or bend the laminations even though they hold them securely in position. And since the frame takes the entire stress during lifting, there is no flexing of the core laminations upon the handling of the transformer.

The subject matter which we regard as our invention is particularly pointed out and distinctly claimed in the concluding portion of this specification. Our invention, however, both as to organization and advantages, may best be understood by reference to the following description taken in conjunction with the accompanying drawings in which:

FIG. 1 is a perspective view from the front of an improved dry-type transformer embodying our invention in one form thereof;

FIG. 2 is a cross sectional view taken on the line 2—2 of FIG. 1;

FIG. 3 is a front elevational view of the supporting and clamping frame included in the transformer, the core and coils of the transformer being shown on the frame in dotted lines;

FIG. 4 is a side elevational view of the frame as shown in FIG. 3; and

FIG. 5 is a fragmentary perspective view showing the connecting structure employed at the upper end of the clamping straps for the outer legs of the core.

Referring now to FIG. 1, we have shown therein a three phase transformer **1** embodying our invention. The transformer **1** is a dry-type transformer adapted for operation without immersion in insulating oil or the like, and it includes a core **2** formed of laminations of grain oriented steel. The core **2** comprises three vertically extending legs **3**, **4** and **5**, and suitable top and bottom yokes **6** and **7** which connect the legs magnetically. Each of the legs **3**, **4** and **5** has a set of electrical coils fitted thereon. As is best seen in FIG. 2, each of these sets includes a pair of high voltage coils **8** and **9** and a low voltage coil **10**. The high voltage coils **8** and **9** each include a large number of turns of relatively fine wire covered on the outside by a suitable insulating compound, and the low voltage coil **10** includes a pair of spaced apart coil sections **10***a* and **10***b* formed of a small number of turns of relatively heavy flat wire or strip. The low voltage

coil **10** is specifically designed for feeding a load having a high current demand, such as, for example, a resistance furnace. The high voltage coils **8** and **9** are insulated from each other by the covering on the inner coil **9**, and suitable spacers **11** are provided for insulating the coil **9** from the outer section **10***a* of the low voltage coil **10**. The section **10***a* is, in turn, spaced from the inner section **10***b* by insulators **12**, and the section **10***b* is insulated from the core by generally rectangular insulating tube or spool **13**.

In the transformer **1** the core **2** and the coils **8**, **9** and **10** are supported by a rigid frame **14** which is constructed and arranged in accordance with our invention. The frame **14** includes a base member or girder **15** which rests on the floor or other supporting structure and supports the bottom yoke **7** of the core. In our preferred embodiment the girder **15** is channel shaped in cross section and is turned open side down (see FIG. 4). The yoke **7**, as shown, rests on the top of the girder, a suitable insulating sheet (not shown) being positioned between them, and the girder is provided with a number of laterally extending feet to prevent tipping. In particular, in the illustrated embodiment, it has three center feet **16** comprising flat plates and two end feet **17** comprising angle iron sections.

In order to clamp together the laminations of the bottom yoke **7** of the core, there are provided a plurality of channel shaped clamps **18**. These clamps **18** are welded to the sides of the girder **15** at their lower ends and extend upwardly along the sides of the yoke **7**. Only the front clamps **18** are shown in FIG. 1 but it will be understood that similar clamps are provided at the rear of the girder. These clamps press against the outer laminations of the yoke **7** and thereby hold the laminations of the yoke firmly together. A suitable insulating strip is preferably provided between each of the clamps **18** and the outer laminations of the yoke to electrically and magnetically separate the clamps from the yoke.

Also welded to the base girder **15** are a plurality of clamping straps for clamping together the core legs **3**, **4**, and **5**. A pair of these straps is provided for each leg of the core, with one of the straps being positioned in front of the leg and the other strap behind it. As shown, the front and rear straps **19** and **20** for the outside legs **3** and **5** extend a substantial distance above the upper surface of the top yoke **6**. The straps **21** for the center leg **4**, however, extend only a short distance above the top of the yoke. The rear strap for the center leg **4** is not shown but it will be understood that it is identical to the front strap.

The clamping straps **19**, **20**, and **21** serve to clamp or hold together the laminations of the legs of the core without any core bolts or the like being required. Since the straps extend for the length of the legs, they apply an even clamping force at all points along them with no particular pressure concentrations. Thus there is no flexing of the leg laminations, as in bolted cores, to affect their magnetic properties. The clamping straps **19**, **20** and **21** are preferably formed of steel plate and are substantially thicker and stronger than the individual laminations of the core legs. In our preferred embodiment the straps are insulated from core legs by means of suitable insulating strips **22** (FIG. 2).

At the top of the core the two clamps associated with each leg are rigidly connected together. The clamps **19** and **20** for the outer two core legs are each connected together by means of a rigid bar of channel **23** (see FIG. 5). This channel in our preferred embodiment is welded at its opposite ends to the two straps and holds them in a fixedly spaced relationship at their upper ends. It will be seen that welded to the girder at their bottom ends and connected together by the channels **23** at their upper ends, the clamps are rigidly held so as to clamp together the laminations of the legs **3** and **5**. In other words they are so held against the laminations of the outer legs that the laminations cannot slip or otherwise flex. It will be noted that elongated, non-compressible wedges **23***a* are positioned between the clamps **19** and **20** and the spool **13** of the inner coil **10**. These wedges, which may be driven in place by an air hammer or the like, apply a uniform force to the clamps **19** and **20** for the length of the coils. Thereby the clamps and the core legs are positively prevented from bowing.

The clamps **21** for the center leg are also held together at their upper ends and are wedged by means similar to the wedges **23***a*. The means connecting the clamps **21** at their upper ends comprises a bar or channel **24**. It will be noted that the channel **24** is turned so that its main face or bight engages the top of the yoke **6**, and it is elongated so that it extends along the top of the yoke **6** for a distance on each side of the clamps **21**. It thus serves to hold the laminations of the yoke **6** in place and prevent them from moving relative to each other. Besides this clamping action provided by the center channel **24**, the outside connectors **23** also engage the top of the yoke **6** and thereby clamp its laminations at their outer ends.

Besides being clamped on its upper surface, the top yoke **6** is also clamped together from the sides. To effect this side clamping, suitable channel shaped clamps **25** are provided at the front and the rear of the yoke. These clamps **25** are welded at their top ends to the sides of the channel **24** and extend downwardly along the sides of the yoke. They thereby engage the yoke on both faces and clamp it firmly together. It will be understood that an insulating spacer (not shown) is preferably provided between each of these clamps and the outside lamination of the yoke.

In order to provide for the handling of the transformer, a suitable aperture **26** is provided in each of the side connectors **23** (see FIG. 5). A steel cable, hooks or other suitable lifting means may be inserted into these apertures **26** so as to lift the transformer. It will be seen that when a lifting force is applied to the connectors **23** by means of the apertures **26**, this force is transmitted from the connectors **23** to the two pairs of clamps **19** and **20**. The clamps **19** and **20** being attached to the base girder **15** at their lower ends, the force is transmitted through them to the girder **15**, and thereby the transformer **1** is lifted as a unit. In other words it is lifted by the frame **14**. It will be particularly noted that during this lifting, none of the lifting force is transmitted through the legs or yoke of the core **2**. Rather all the force is transmitted through the members of the frame and thereby no flexing or straining of the yoke is caused.

To prevent sideways shifting of the clamping straps **19** and **20** and the core legs **3** and **5** during lifting, a stiffening bar or beam **27** is connected between each of the straps **19** and each of the straps **20**. In other words, the two front straps **19** are rigidly interconnected at their upper ends by a bar **27** and so are the two rear clamps **20**. With the stiffening effected by the bars **27**, the straps cannot shift toward or away from each other and thereby neither can the laminations of the legs **3** and **5**. Thus with our improved frame, the core legs are firmly clamped in all directions during lifting so that no shifting or flexing of their laminations can occur. The two bars **27** in certain instances may be replaced by a bar or beam connected between the cross pieces **23**, which will provide a generally equivalent stiffening action.

It will be noted that the stiffening members **27** are considerably smaller in cross section than the straps **19** and **20**. As a result even though they complete a magnetic loop between the straps, they introduce enough reluctance into this loop that only a very small amount of flux flows through the loop during the operation of the transformer. In other words, by reason of the small size of these members, the reluctance of the leakage loop formed by the frame **14** is small enough that the magnetizing losses in

it are almost negligible. Also, it will be noted that the stiffening bars **27** are spaced an appreciable distance from the top yoke thereby increasing the length of the leakage loop in the frame as compared with the length of the flux paths in the yoke. This too increases the comparative reluctance of the leakage loop and reduces the core loss in it. Thus in our preferred embodiment a particularly effective frame arrangement is provided for clamping and lifting a transformer core without increasing the core loss appreciably and without any special means being required to minimize the core loss in the frame.

It will be noted incidentally that the coils **8**, **9** and **10** are supported by a combination of the main frame **14** and the core **2**. The coils to some extent rest on insulating sheets (not shown) provided on the top surface of the bottom yoke **7**, but to support the portions of the coils protruding out of the core, a plurality of plates **28** are welded to the feet **16** and the clamps **19**, **20** and **21**. The plates **28** each carry a coil mount **29** formed of insulating material, and the coils **8**, **9** and **10** rest directly on and are supported by these mounts **29**. Also, in addition to the mounts **29** at the front and back of the core, the two outside sets of coils are provided with side supports comprising mounts **30** which are carried by angle iron members **31** welded to the girder **15**. As indicated above, the inner sides of the two outer sets of coils and both sides of the center set of coils rest on a suitable insulator (not shown) provided on top of the bottom yoke **7**. At their tops all the coils engage insulators **32** disposed beneath the top yoke **3**, and they are, of course, held radially with regard to the core legs by means of the spacers shown in FIG. 2. Thus, with this arrangement it will be seen that the coils are held securely in place on the core **2** and cannot shift no matter how the transformer may be tipped swung during lifting on the core.

Considering all of the above, it will be seen that we have provided a new and improved stationary induction apparatus in which the laminated core is clamped together by means of a rigid frame without any core bolts or the like passing through the core. The frame is effective to hold the core together without pinching or stressing any particular part of the core, whereby the core loss is kept to a minimum. The frame is also effective to lift the core without any force being transmitted through the core itself, whereby no increases in the magnetic losses result from the handling of the core. Despite its physical strength the frame does not introduce any substantial losses of its own because it includes only one complete magnetic loop and that loop includes high reluctance members in the form of the top stiffeners. The stiffeners, by their reluctance insure that no substantial leakage flux passes through that loop during the operation of the apparatus.

In eliminating the core bolts our improved construction also provides some additional advantages, not heretofore mentioned, in the assembly of the transformer unit. With there being no core bolts, no holes need be punched in the core laminations, removing that operation completely. Also, as the assembler stacks the laminations of the core, there are no holes to be aligned, which allows him to work faster. The elimination of the core bolts additionally removes one possible cause of shorting between the core laminations. It is not at all unknown in conventional transformers for the core bolt insulation to fail, so that the core bolts form a direct path between the separate laminations increasing core loss. Further, our construction with the frame assembly readily engageable at the top may be placed in or lifted out of a surrounding casing with a minimum of difficulty.

While in accordance with the patent statutes we have described what at present is considered to be the preferred embodiment of our invention, it will be obvious to those skilled in the art that various changes and modifications may be made therein without departing from the invention, and it is, therefore, aimed in the appended claims to cover all such variations and modifications as fall within the true spirit and scope of the invention.

What we claim as new and desire to secure by Letters Patent of the United States is:

1. In a stationary induction apparatus, a laminated core member including a plurality of vertically extending legs and top and bottom yokes connecting said legs, electrical coils disposed on said legs, and a combination lifting and clamping frame for said core member comprising a base disposed under said bottom yoke for supporting said core member, a pair of flat straps associated with each of said legs for clamping together the laminations thereof, said straps being disposed on opposite sides of said legs and engaging said sides to clamp said laminations, means fixedly securing said straps to said base at their bottom ends and means securing together each pair of straps at their upper ends, whereby said straps are rigidly interconnected with each other and with said base and said apparatus may be lifted thereby without any force being passed through said core member, and stiffening means rigidly securing together said straps of at least two of said core legs to prevent shifting of said straps and said legs during lifting of said apparatus, said stiffening means being substantially smaller in cross section than said straps for limiting the core loss in said frame during the operation of said apparatus.

2. In a stationary induction apparatus, a laminated core member including a plurality of vertically extending legs and top and bottom yokes connecting said legs, electrical coils disposed on said legs, and a combination supporting and clamping frame for said core member comprising a base girder disposed under said bottom yoke for supporting said core member, a pair of flat straps associated with each of said legs for clamping together the laminations thereof, said straps being disposed on opposite sides of said legs and engaging said sides to clamp said laminations, means fixedly securing said straps to said girder at their bottom ends and a separate cross member securing together each pair of straps at their upper ends, said cross members engaging the upper surface of said top yoke to prevent the shifting thereof, and at least two of said cross members being arranged so that a lifting force may be applied thereto for lifting said apparatus through said straps and said base girder without any force being passed through said core member, and stiffening means rigidly securing together the straps associated with at least two of said core legs to prevent shifting of said straps and said legs during the lifting of said apparatus, said stiffening means being substantially smaller in cross section than said straps for limiting the core loss in said frame during the operation of said apparatus.

3. In a stationary induction apparatus, a laminated core member including a plurality of vertically extending legs and top and bottom yokes connecting said legs, electrical coils disposed on said legs, and a combination supporting and clamping frame for said core member comprising a base girder disposed under said bottom yoke for supporting said core member, a pair of flat straps associated with each of said legs for clamping together the laminations thereof, said straps being disposed on opposite sides of said legs and engaging said sides to clamp said laminations, means fixedly securing said straps to said girder at their bottom ends and a separate cross member securing together each pair of straps at their upper ends, one of said cross members consisting of a beam extending along the upper surface of said top yoke for clamping said yoke, and at least a pair of said cross members being arranged so that a lifting force may be applied thereto for lifting said apparatus through said straps and said base girder, and stiffening means rigidly securing together the straps connected by said pair of cross members, thereby to prevent shifting of said straps

and their associated core legs during the lifting of said apparatus, said stiffening means being substantially smaller in cross section than said straps for limiting the core loss in said frame during the operation of said apparatus.

4. In a stationary induction apparatus, a laminated core member including a plurality of vertically extending legs and top and bottom yokes connecting said legs, electrical coils disposed on said legs, and a combination supporting and clamping frame for said core member comprising a base girder disposed under said bottom yoke for supporting said core member, a plurality of upstanding clamps attached to said base girder for clamping together said bottom yoke, a pair of flat straps associated with each of said legs for clamping together the laminations thereof, said straps being disposed on opposite sides of said legs and engaging said sides to clamp said laminations, means fixedly securing said straps to said girder at their bottom ends and a separate cross member securing together each pair of straps at their upper ends, one of said cross members consisting of a beam extending along the upper surface of said top yoke and a plurality of depending clamps carried by said beam for clamping said top yoke, at least a pair of said cross members arranged so that a lifting force may be applied thereto for lifting said apparatus through said straps and said base girder, and stiffening members rigidly securing together the respective front and rear straps connected by said pair of cross members, thereby to prevent shifting of said straps and the core legs associated therewith during the lifting of said apparatus, said stiffening members being substantially smaller in cross section than said straps for limiting the core loss in said frame during the operation of said apparatus.

5. In a stationary induction apparatus, a laminated core member including a plurality of vertically extending legs and top and bottom yokes connecting said legs, electrical coils disposed on said legs, an inner insulating spool surrounding each of said legs, and a combination lifting and clamping frame for said core member comprising a base disposed under said bottom yoke for supporting said core member, a pair of flat straps associated with each of said legs for clamping together the laminations thereof, said straps being disposed on opposite sides of said legs and engaging said sides to clamp said laminations, means fixedly securing said straps to said base at their bottom ends and means securing together each pair of straps at their upper ends, whereby said straps are rigidly interconnected with each other and with said base, non-compressible wedges disposed between said spools and said straps for applying a compressive force to said straps and thereby to said legs, and stiffening means rigidly securing together said straps of at least two of said core legs to prevent shifting of said straps and said legs during lifting of said apparatus, said stiffening means being substantially smaller in cross section than said straps for limiting the core loss in said frame during the operation of said apparatus.

6. In a stationary induction apparatus, a laminated core member including a plurality of vertically extending legs and top and bottom yokes connecting said legs, electrical coils disposed on said legs, an inner insulating spool surrounding each of said legs, and a combination supporting and clamping frame for said core member comprising a base girder disposed under said bottom yoke for supporting said core member, a pair of flat straps associated with each of said legs for clamping together the laminations thereof, said straps being disposed on opposite sides of said legs and engaging said sides to clamp said laminations, means fixedly securing said straps to said girder at their bottom ends and a separate cross member securing together each pair of straps at their upper ends, non-compressible wedges disposed between said spools and said straps for applying a compressive force to said straps and thereby to said legs, said cross members engaging the upper surface of said top yoke to prevent the shifting thereof, and at least two of said cross members being arranged so that a lifting force may be applied thereto for lifting said apparatus through said straps and said base girder without any force being passed through said core member, and stiffening means rigidly securing together the straps associated with at least two of said core legs to prevent shifting of said straps and said legs during the lifting of said apparatus, said stiffening means being substantially smaller in cross section than said straps for limiting the core loss in said frame during the operation of said apparatus.

7. In a stationary induction apparatus, a laminated core member including a plurality of vertically extending legs and top and bottom yokes connecting said legs, electrical coils disposed on said legs, an inner insulating spool surrounding each of said legs, and a combination lifting and clamping frame for said core member comprising a base disposed under said bottom yoke for supporting said core member, a pair of flat straps associated with each of said legs for clamping together the laminations thereof, said straps being disposed on opposite sides of said legs and engaging said sides to clamp said laminations, means fixedly securing said straps to said base at their bottom ends and means securing together each pair of straps at their upper ends, whereby said straps are rigidly interconnected with each other and with said base, and non-compressible wedges disposed between said spools and said straps for applying a compressive force to said straps and thereby to said legs.

References Cited in the file of this patent

UNITED STATES PATENTS

1,315,827	Frank	Sept. 9, 1919
1,382,873	Wagner	June 28, 1921
2,784,384	Vance	Mar. 5, 1957
2,886,791	Barengoltz	May 12, 1959
2,910,663	Wilk et al.	Oct. 27, 1959