Nov. 7, 1961 B. F. MIESSNER 3,007,363

TONE GENERATOR

Filed Aug. 29, 1955

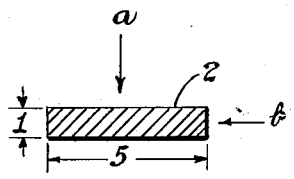

Fig. 1

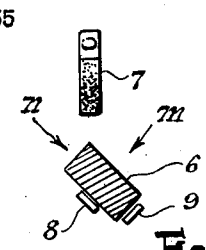

Fig. 2

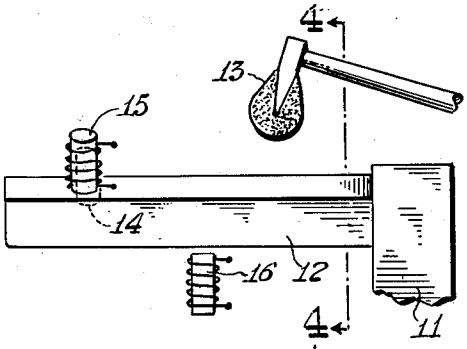

Fig. 3

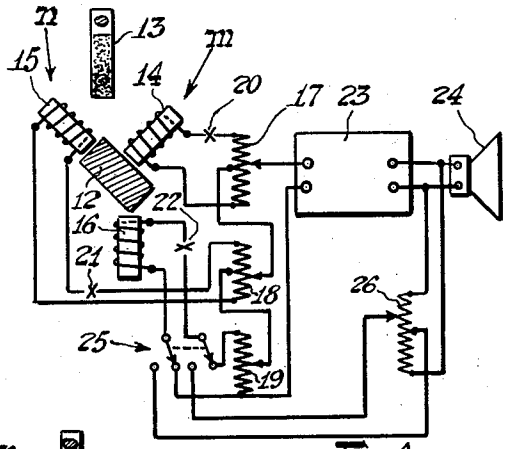

Fig. 4

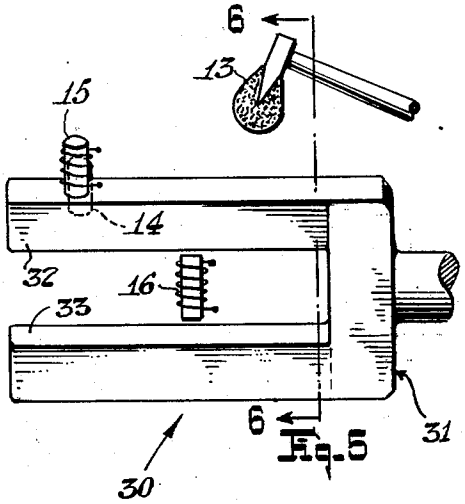

Fig. 5

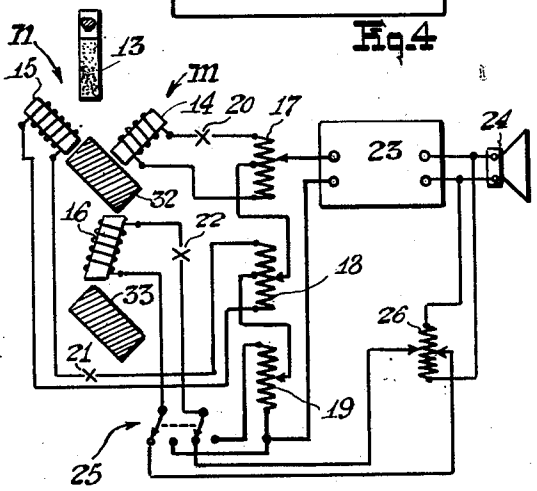

Fig. 6

INVENTOR
Benjamin F. Miessner
BY Walter I. Jacobs,
Attorney.

United States Patent Office

3,007,363
Patented Nov. 7, 1961

1

3,007,363

TONE GENERATOR

Benjamin F. Miessner, Harding Township, Morris County, N.J., assignor to Miessner Inventions, Inc., Harding Township, Morris County, N.J., a corporation of New Jersey

Filed Aug. 29, 1955, Ser. No. 530,952
2 Claims. (Cl. 84—1.15)

This invention relates to tone generators, and more particularly to such a generator of the type comprising a tuned vibrator and an associated mechanico-electric translating device, or pick-up, which translates the vibrations of the vibrator into electric oscillations.

The invention has especial reference to vibrators in the form of bars or beams. The vibrations of such vibrators are normally characterized by upper (i.e., second and higher) partials, or overtones, which are inharmonically or dissonantly related to the first partial (i.e., fundamental). The frequency ratio between the lowest two partials is not only non-integral, but is also relatively large—being for example over 6 in the case of a cantilever (i.e., clamped-free) bar.

It is an object of this invention to develop, from the vibrations of a bar or beam vibrator, electric oscillations having at least one overtone or upper partial musically consonant with the fundamental. It is an allied object to develop electric oscillations in which the thus-consonant upper partial will be the second partial.

It is an object of the invention to develop, from the vibrations of a bar or beam vibrator, electric oscillations having a substantially smaller frequency ratio between the lowest two partials than that normally characterizing electric oscillations translated from the vibrations of such a vibrator.

It is an object of the invention to develop, from the vibrations of a bar or a beam vibrator, electric oscillations in which the amplitude ratio between the first and another partial may be controlled at will. It is an allied object to develop electric oscillations in which the so-controllable amplitude ratio is that between the first and second partials.

Other and allied objects will more fully appear from the following description and the appended claims.

In the description of my invention hereinafter set forth reference is had to the accompanying drawing, in which:

FIGURE 1 is a cross-sectional view of a bar vibrator to which reference is had preliminarily;

FIGURE 2 is a cross-sectional view of a bar vibrator having two electrostatic pick-ups associated therewith, as well as typical exciting means, to form a simple embodiment of my invention;

FIGURE 3 is an elevational view of another embodiment of my invention in which electromagnetic translating means are employed;

FIGURE 4 is a cross-sectional view taken along the line 4—4 of FIGURE 3;

FIGURE 5 is an elevational view of still another embodiment of the invention in which a pair of bar vibrators are employed in a tuning-fork type of structure; and

FIGURE 6 is a cross-sectional view taken along the line 6—6 of FIGURE 5.

It is well known that the natural fundamental frequency of transverse vibration of a bar or beam vibrator is a first-power function of its thickness. Otherwise stated, if the material, length and manner of support of

2

the bar be fixed, the natural fundamental frequency is directly proportional to the thickness—i.e., the dimension in the transverse direction in which the bar is vibrated. Thus in FIGURE 1, in which the bar 2 appears in transverse cross-section, if that bar be excited into transverse vibration in the direction indicated by the arrow *a* the natural fundamental frequency of that vibration will be a constant times the thickness in the direction indicated by *a* (which thickness, since the bar 2 is shown as rectangular, is the same as the width of the side dimensioned as "1."

On the other hand if the bar 2 be excited into transverse vibration in the direction indicated by the arrow *b*, the natural fundamental frequency of that vibration will be the same constant times the thickness in the direction indicated by *b* (which thickness, in view of the rectangular shape of the bar, is the same as the width of the side dimensioned as "5").

The transverse vibration in each of these two directions may be considered as vibration in a respective mode. Each mode has its own series of partials. Thus if the bar 2 is a clamped-free bar of transverse cross-section uniform throughout the length of the bar, the first of these modes (i.e., the *a*-direction vibration) will comprise a series of partials as follows:

1st-Mode Partial No.	I	II	III	IV	V	VI
Relative Frequency	1	6.27	17.5	34.4	56.9	85

If the *b*-direction thickness be (as indicated by the relative dimensioning in FIGURE 1) 5 times the *a*-direction thickness, then the second of the above-mentioned modes will comprise a series of partials respectively having frequencies 5 times those of the first series, as follows:

2nd-Mode Partial No.	I	II	III	IV	V	VI
Relative Frequency	5	31.35	87.5	172	284.5	425

The ratio 5:1 between the partial frequencies of the two series has of course been utilized by way of example only.

The present invention concerns the simultaneous production and utilization of both of two modes of transverse vibration, with the inter-mode frequency ratio preferably established—conveniently done by establishment of relative thicknesses in each of two transverse dimensions—at a low integral (e.g., 2:1, 3:1, . . .) or harmonious (e.g., 1.25:1, 1.5:1, . . .) value.

A simple embodiment is illustrated in FIGURE 2. Herein the vibrator appears as 6; it is of rectangular cross-section, and by way of example has thicknesses in the two transverse directions in the ratio of 2:1. With the vibrator is associated an exciting means in the form of a hammer 7 propellable to strike the vibrator. In this figure the hammer is shown propellable to strike the corner or edge of the vibrator at an angle of 45 degrees to the plane of each of the sides adjacent that edge (this conveniently being done for example by mounting the vibrator with its four sides each at an angle of 45 degrees away from vertical, and by utilizing a vertically downward path for the propulsion of the hammer). Such striking of the vibrator will produce two components of impact against the bar 6, one component in the direction of one of the bar's thicknesses (or at right angles

to one of its widths) and the other component in the direction of the other of the bar's thicknesses (or at right angles to the other of its widths), the two components of course being simultaneous. These two components of impact will excite the bar simultaneously into two modes of transverse vibration in directions respectively similar to the directions of those components. Considering the lower-frequency one of the two modes as the first, then in view of the 2:1 ratio of thicknesses the two modes of vibration will have relative frequencies as follows:

Partial No.	I	II	III	IV	V	VI
1st-Mode Relative Freq.	1	6.27	17.5	34.4	56.9	85
2nd-Mode Relative Freq.	2	12.54	35	68.8	113.8	170

For convenience in FIGURE 2 the directions of the two components of impact and of the two modes of vibration have been indicated by the respective arrows *m* and *n*.

For translating the vibrations of both modes into electric oscillations FIGURE 2 shows two electrostatic pick-up electrodes **8** and **9** respectively in close spaced relationships to two dissimilar ones of the four sides of the bar **6** and responsive (when connected in suitable polarized or amplitude- or frequency-modulating circuits, themselves well known and therefore unnecessary herein to illustrate or describe) respectively to the 1st and 2nd modes of vibration. From the foregoing it will be apparent that in the electrical outputs of the two pick-ups or translating devices **8** and **9**, considered collectively as a single output, there will be present an oscillation partial series of relative frequencies as follows:

1.; 2.; 6.27; 12.54; 17.5; 34.4; 35.;
56.9; 68.8; 85.; 113.8; . . .

This series (as well as each of the individual series shown hereinabove) would be different if the bar **6**, instead of being a clamped-free bar, were otherwise supported (i.e., were for example a free-free bar)—but even in such a case it will be understood that, so long as the 2:1 ratio between the bar's two thicknesses be maintained, the first two terms of the series would remain respectively 1 and 2.

The presence of the second partial with a frequency ratio to the fundamental of 2:1 (or of such other musically consonant one as may be decided upon and achieved by choice of relative thicknesses of the bar in two directions) at once achieves several of the first-above-stated objects of the invention.

The illustrated 45-degree angular relationship between the path of hammer movement and the two hammerward sides of the bar **6** results in equal components of impact in each of the two directions *m* and *n*, and therefore in a certain ratio between the amplitudes of any vibration partial in the 2nd mode and the corresponding vibration partial in the first mode—and in turn (assuming the two translating means to be fixed in relative efficiencies) in a certain ratio between the amplitudes of the oscillations respectively translated from such vibration partials.

The amplitude ratio between second and first partials in the composite electrical output is a function of the ratios mentioned in the preceding paragraph. Both it and all those so-mentioned ratios may be subjected to increase or decrease by alteration, in one angular direction or the other, of the angular relationship mentioned at the beginning of the last paragraph—to the limiting ratios of zero in one direction and of infinity in the other.

It will be of course be understood that the amplitude interrelationships between the several partials within each individual one of the two modes (which interrelationships do not include the amplitude ratio between the second and first partials in the composite output) will be subject to alteration according to the point longitudinal of the vibrator at which the excitation is applied and/or the translation is effected; the principles governing such alteration have been disclosed elsewhere (including in U.S. Patent No. 2,413,062 to me, in my co-pending application Serial No. 255,383, filed November 8, 1951, now Patent No. 2,919,616; and in other co-pending applications of mine mentioned below). It will also be understood that the exact frequency interrelationships between the several partials within each individual one of the two modes (which, in turn, do not include the frequency interrelationship between the second and first partials in the composite output) will be subject to shifting by various techniques already disclosed (including in the abovementioned patent to me; in my co-pending application Serial No. 169,714, filed June 22, 1950, now abandoned; in my co-pending application Serial No. 189,345, filed October 5, 1950, now abandoned; in my co-pending application Serial No. 270,145, filed February 6, 1952, now Patent No. 2,755,697; in my co-pending application Serial No. 270,312, filed February 7, 1952, now abandoned; and in my co-pending application Serial No. 485,471, filed February 1, 1955, now abandoned but of which the subject matter was continued in application Serial No. 678,101, filed August 14, 1957, and now Patent Number 2,942,512). The disclosures of such matters need not be here repeated; it is here sufficient to point out that an apt use of the principles and techniques of such disclosures is in general wholly consistent with, and desirable in connection with the practise of, the present invention.

FIGURES 3 and 4 illustrate an embodiment in which further features of my invention are incorporated; by way of example they show a modified form of mechanico-electric translating device. In them the vibrator is designated as **12**, securely mounted in and extending from a base **11**. As in the case of FIGURE 2, the vibrator has been shown as being rectangular in transverse cross-section; as typically having a ratio between its two thicknesses of 2:1; and as having its sides each inclined 45 degrees with respect to the vertically downward path of propulsion of the hammer, herein designated as **13**. In this instance the two translating devices broadly analogous to **8** and **9** of FIGURE 2 are shown as **14** and **15**, of the electromagnetic variety; by way of example they are shown in close spaced relationships to the upper (instead of the lower) two sides of the vibrator **12**.

The output of the translating device **14** is connected across a potentiometer **17**, and the output of the translating device **15** across a potentiometer **18**. The adjustable output sections of these potentiometers (together with that of a potentiometer **19** hereinafter mentioned) are connected in series with each other and to the input of a utiliziation device **23**—which may for example be an electronic amplifier to the output of which is connected a loudspeaker or other electro-acoustic translating device **24**.

The illustration of FIGURES 3–4 is presented, by way of convenience, for a single vibrator **12** only, but in practise other vibrators tuned to other fundamental frequencies will ordinarily be associated with it to provide a playable scale of notes. It will be understood that in association with each such other vibrator there would be provided respective translating devices corresponding to **14** and **15** associated with vibrator **12**. Typically the outputs of all translating devices corresponding to **14** would be serially connected and inserted serially at such a point as designated as **20**, and the outputs of all translating devices corresponding to **15** would be serially connected and inserted serially at such a point as designated as **21**.

With the system as so far described it will be understood that the utilized electrical output of those translating devices (**14**) which are responsive to the *m*-direction vibrations of the vibrators may be regulated in amplitude by the one potentiometer **17**, while the utilized

electrical output of those translating devices (15) which are responsive to the *n*-direction vibrations of the vibrators may be regulated in amplitude by the one potentiometer 18. Thus these potentiometers afford means operable at will to control the relative contributions, to the composite output tone, of the two vibrational modes of all the vibrators of the system. Since the second and first partials of the composite tone derived from any of the vibrators are respectively derived from those two modes, the amplitude ratio between them is subject to control by these potentiometers.

For many purposes it may not be required to exert control over the relative contributions of the two vibrational modes of the vibrator—it being for them sufficient that those relative contributions be suitably predetermined and not thereafter varied. In such cases there may be utilized a single translating device so associated with the vibrator as to be responsive to vibrations of both its vibrational modes. Such association is readily achieved, for example, by positioning a translating device, such as 16 in FIGURES 3–4, in close spaced relationship to an edge (for example, that opposite the edge struck by the hammer 13 in these figures) of the vibrator 12, so that it is influenced by the vibrations appearing on each of the sides of the vibrator beween which that edge lies.

In the figures the device 16 is shown as having its active (top) pole face at an angle of 45 degrees to the plane of each of the nearby sides of the vibrator. It will, however, be understood that by alteration of this angular relationship in one angular direction or the other, achieved by reorientation of the device 16, the relative contributions of the two vibrational modes may be brought to any desired value.

The output of the translating device 16 is shown as connected through a switch 25 to the potentiometer 19 mentioned above, the output of which has already been described as connected to the input of the utilization device 23. At such a point as 22 there may be serially connected the outputs of translating devices corresponding to 16 and associated with other vibrators of the system.

In many cases in which a translating device (such as 16) responsive to both vibrational modes is used it will be because the tonal flexibility afforded by output control over such separate translating devices as 14 and 15 is not found necessary for the purposes of the system—in which event the latter translating devices may be omitted (or their associated potentiometers 17 and 18 adjusted to zero output). There are, however, some requirements the meeting of which will be facilitated by the joint use of all three devices 14, 15 and 16, particularly if (as illustrated in FIGURE 3) at least one of the devices (e.g., 16) is positioned longitudinally of the vibrator at a position significantly different from the others—for this, in view of the well-understood shifts of amplitudes and reversals of phases of various vibration partials longitudinally of the vibrator, affords the opportunity to utilize the translating device 16 to augment some and reduce or buck out others of the oscillation partials picked up by the devices 14 and 15. For such purposes it is usually desirable that the phases of the oscillations from either 16 or 14 and 15 be reversible at will, and it is for this reason among others that the potentiometers 17 and 18 have been shown as of the center-tapped phase-reversible type.

For certain purposes it may be desirable to provide the facility of sustaining the vibrator in vibration in both of its modes. The device 16 (functioning now as an electromechanical translating device) may be used for this purpose if the switch 25 be thrown to connect that device to the output of a potentiometer 26 (preferably of the center-tapped phase-reversible type) whose input is connected to the output of the amplifier 23. It will of course be understood that it is the feedback through 16 to the vibrator, of vibratory energy initially derived in minute electrical form from the vibrator through 14 and 15 and amplified by 23, which effects the sustention. Alternatively there may be employed less feedback than sufficient for sustention of vibration, for the purpose of reducing the rate of decrement of a tone initiated by the hammer 13—or, when reversed in phase, the feedback may be used to effect an enhanced decrement of such a tone.

FIGURES 5 and 6 illustrate a structure quite similar to that of FIGURES 3 and 4 excepting only that the bar 12 of the earlier figures is replaced by a bar 32 which forms one (illustrated as the upper) of the two tines of a tuning fork 30, of which the other line is designated as 33. The tines are of course similar to each other, each one having the predetermined ratio between its two thicknesses (e.g., 2:1) chosen for the purposes set forth at length above; they are preferably developed from the common base 31 of the fork with each of their sides inclined at an angle (e.g., a uniform 45 degrees) with respect to the plane containing the longitudinal center lines of the two tines. The translating device 16 may extend from close spaced relationship to the inner edge of one tine into a similar relationship to the inner edge of the other tine.

The structure of these figures may be operated in any of the manners disclosed above in connection with that of FIGURES 3 and 4, in any case with the characteristics (generic to tuning forks) of essential neutralization by the mutually opposed vibrations of the two tines of vibratory reaction on the common base, and of resultant low decrement insofar as abstraction of energy through the base is concerned. When employed with the switch 25 thrown (as shown) to connect the translating device 16 to the amplifier output, the resulting structure is a tuning-fork oscillator useful at either or both of two fundamental frequencies—for (as is true also of the FIGURES 3–4 structure) if the potentiometer 18 be adjusted for zero output there will be developed sustained oscillations in the *m*-direction mode only, if instead the potentiometer 17 be adjusted for zero output there will be developed sustained oscillations in the *n*-direction mode only, while if neither of those potentiometers be adjusted for zero output there will be developed sustained oscillations in both of those modes. In this connection it may be observed (for both the FIGURES 3–4 and the FIGURES 5–6 structures) that the translating-device functions could be reversed (i.e., 14 and 15 connected as drivers and 16 as a pick-up) and the one-, other- or both-frequency operation at will retained.

This application is a continuation-in-part of my copending application Serial No. 169,713, filed June 22, 1950, now abandoned and entitled "Tuned Mechanical Vibrators."

While I have disclosed my invention in terms of particular embodiments thereof, I intend no unnecessary limitations thereby. Modifications in many respects will be suggested by my disclosure to those skilled in the art, and such modifications will not necessarily constitute departures from the spirit or scope of the invention, which I undertake to define in the following claims.

I claim:

1. In a musical instrument, a beam-type vibrator adapted for simultaneous excitation in two distinct vibration modes, said vibrator having a width-to-thickness ratio such that the like-numbered vibration partials of the several vibration modes are musically consonant with each other, means supporting the vibrator to permit simultaneous excitation of the vibrator in both of said modes to produce a complex integral musical tone, and a translating device adjacent the vibrator, disposed at oblique angles with respect to both the width and the thickness of the vibrator and responsive to its vibration in each of said modes.

2. In a musical instrument, a beam-type vibrator adapted for simultaneous excitation in a plurality of distinct vibration modes, said vibrator having a width-to-thickness ratio such that the like-numbered vibration partials of the several vibration modes are musically consonant with each other, means supporting the vibrator to per-

mit simultaneous excitation of the several said modes to produce a complex integral musical tone, and a single mechanico-electric translating device in spaced relation to the vibrator and responsive to its vibrations in the several said modes.

References Cited in the file of this patent

UNITED STATES PATENTS

967,477 Winterhoff ---------- Aug. 16, 1910
1,933,298 Miessner ---------- Oct. 31, 1933
2,027,073 Vierling ---------- Jan. 7, 1936
2,413,062 Miessner ---------- Dec. 24, 1946
2,672,781 Miessner ---------- Mar. 23, 1954
2,690,091 Slaymaker et al. ---------- Sept. 3, 1954

OTHER REFERENCES

Publication: A text book of Sound by Wood, reprinted 1946 by G. Bell and Sons Ltd., London, pages 87–120.