June 21, 1932. D. C. CORNER 1,863,621

WINDING DEVICE

Filed Feb. 20, 1930

Fig. 1.

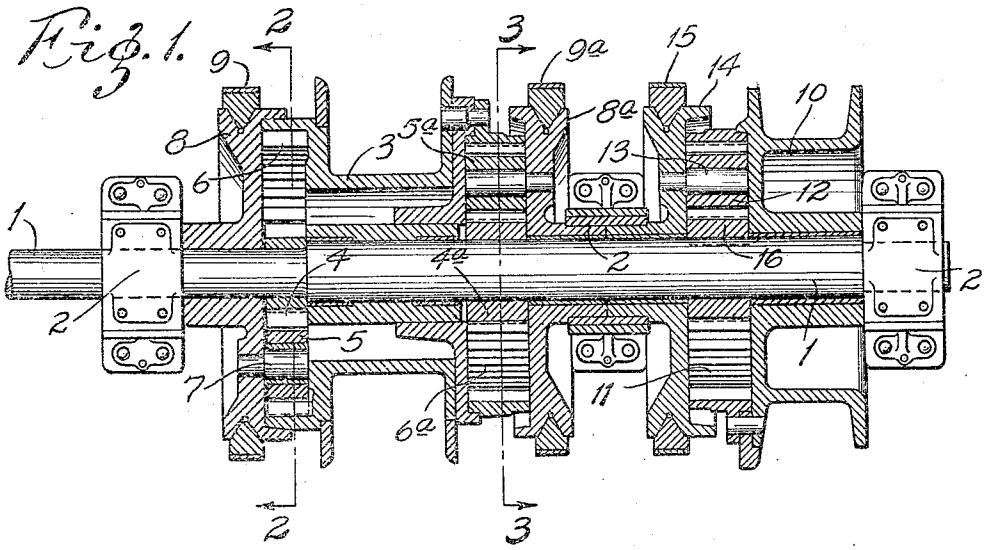

Fig. 2.

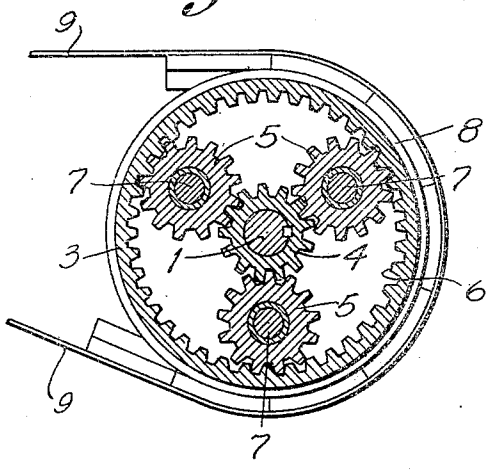

Fig. 3.

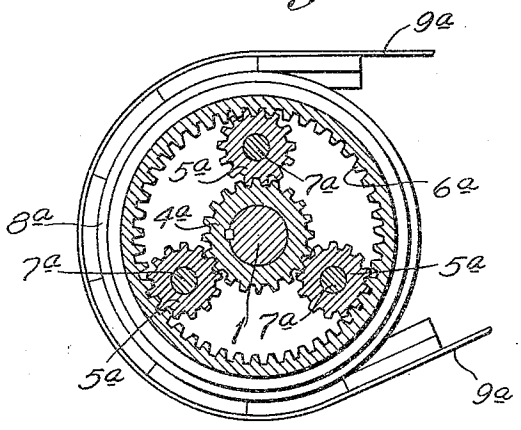

INVENTOR.

Douglas C. Corner

by Carter Carter Gravely

HIS ATTORNEYS

Patented June 21, 1932

1,863,621

UNITED STATES PATENT OFFICE

DOUGLAS C. CORNER, OF WEBSTER GROVES, MISSOURI, ASSIGNOR OF ONE-HALF TO ST. LOUIS POWER SHOVEL COMPANY, OF ST. LOUIS, MISSOURI, A CORPORATION OF MISSOURI, AND ONE-HALF TO LUCIEN EATON, OF ISHPEMING, MICHIGAN

WINDING DEVICE

Application filed February 20, 1930. Serial No. 429,979.

This invention relates to winding devices and has for its principal objects to provide for driving the winding drum at different speeds in the same direction, to provide for the proper housing of the driving mechanism, and to provide for simplicity of construction, compactness of design and ease of operation. The invention consists in the winding device, and in the combinations and arrangements of parts hereinafter described and claimed.

In the accompanying drawing, which forms part of this specification and wherein like symbols refer to like parts wherever they occur,

Fig. 1 is a longitudinal sectional view through a winding device embodying my invention,

Fig. 2 is a transverse section on the line 2—2 of Fig. 1, showing the low speed gearing; and

Fig. 3 is a transverse section on the line 3—3 in Fig. 1 showing the high speed gearing.

My winding device comprises a continuously rotating motor driven main drive shaft 1 journaled in suitable bearings 2. Journaled on said shaft is a drum 3, upon which the cable (not shown) is wound. The hoisting or winding drum 3 is driven at two different speeds in the same direction by two epicylic or planetary gear trains located one in each end of said drum. The low speed gear train in one end of the winding drum 3 comprises a sun pinion 4 meshing with one or more planet pinions 5, which mesh with an internal gear 6 in said end of said drum. The sun pinion 4 is fixed to the drive shaft 1; and the planet pinions 5 are journaled on studs 7 fixed to a grooved wheel 8 that is journaled on said drive shaft and serves to close the opening in the adjacent end of the winding drum 3.

The high speed gear train in the other end of the winding drum 3 comprises a sun pinion 4*a* meshing with one or more planet pinions 5*a*, which mesh with an internal gear 6*a* in said end of said drum. The sun pinion 4*a* is fixed to the drive shaft 1; and the planet pinions 5*a* are journaled on studs 7*a* fixed to a grooved wheel 8*a* that is rotatably supported on said drive shaft and serves as a closure member for the adjacent end of the winding drum. As shown in the drawing, the difference in speed and power transmitted to the winding drum by the two gear trains is obtained by making the sun pinions, planet pinions and internal gears of the two trains of different diameter or pitch.

The grooved planet pinion supporting wheels 8 and 8*a* are encircled by contracting friction bands 9 and 9*a* that are tightened upon the respective wheels by any suitable mechanism ordinarily employed for this purpose. When the brake bands are released, the drive shaft will run idle without effecting either of the planetary gear trains. When either of the brake bands is applied to the wheel with which it cooperates, said wheel, together with the planet pinions carried thereby, will be held against bodily rotation, whereby the sun pinion will drive the planetary pinions which, in turn, will drive the internal gear and thus rotate the winding drum.

The device is also provided at the right hand end of the drive shaft with a second single speed winding drum 10 driven by a planetary gear train comprising an internal gear 11 located at one end of said drum and meshing with a plurality of planetary pinions 12 journaled on studs 13 fixed to a supporting wheel 14 which is journaled on said drive shaft and has a grooved periphery adapted to be engaged by a suitable brake band 15. The planetary pinions 12 are driven by a sun pinion 16 fixed to the drive shaft. With this arrangement, the single speed winding drum is caused to rotate when the brake band 15 is applied to the grooved planetary pinion supporting wheel 14.

The above device is designed particularly with reference for use in operating the drag scraper of an excavating machine, the two speed drum being used for operating the loaded scraper and the single speed reversing drum being use for returning the empty scraper to its starting position. The hereinbefore described winding device has numerous advantages. It provides a low speed

with great power for starting and picking up the load and a high speed for obtaining a faster travel of the load after the same is in motion. Another advantage is that both gear trains are compactly housed within the winding drum where they are protected from dust or grit. Other advantages are simplicity and cheapness of construction and ease of operation.

What I claim is:

1. A winding device comprising a drive shaft, a winding drum rotatably supported on said drive shaft and provided at its opposite ends with internal gears of different diameters, wheels journaled on said shaft at the ends of said drum, means for holding either of said wheels against rotation, pinions rotatably supported on said wheels and meshing with the internal gears at the ends of said drum, and drive pinions fixed to said drive shaft and meshing with the pinions carried by the respective wheels, the pinions, the drive pinions and the internal gears at the opposite ends of said drum being of different diameters.

2. A winding device comprising a drive shaft, a winding drum rotatably supported on said drive shaft and provided at its opposite ends with internal gears, wheels journaled on said shaft at the ends of said drum, contracting brake bands for holding either of said wheels against rotation, pinions journaled on said wheels and meshing with the internal gears at the ends of said drum, and drive pinions fixed to said drive shaft and meshing with the pinions carried by the respective wheels, the gearing at opposite ends of said drum being adapted to drive the same at different speeds.

3. A winding device comprising a drive shaft, a winding drum rotatably supported on said drive shaft, wheels journaled on said shaft at the opposite ends of said drum, means for holding either of said members against rotation, and planetary gear trains in said drum for transmitting motion from said drive shaft to said drum to drive the latter at different speeds in the same direction, each of said gear trains comprising planet pinions rotatably supported on said wheels, internal gears at the ends of said drum and meshing with said planet pinions, and sun pinions fixed to said shaft and meshing with said planet pinions.

Signed at St. Louis, Missouri, this 15 day of February, 1930.

DOUGLAS C. CORNER.