March 19, 1929. B. O. AUSTIN 1,705,700

CONTROL APPARATUS

Filed April 15, 1926

Fig. 1.

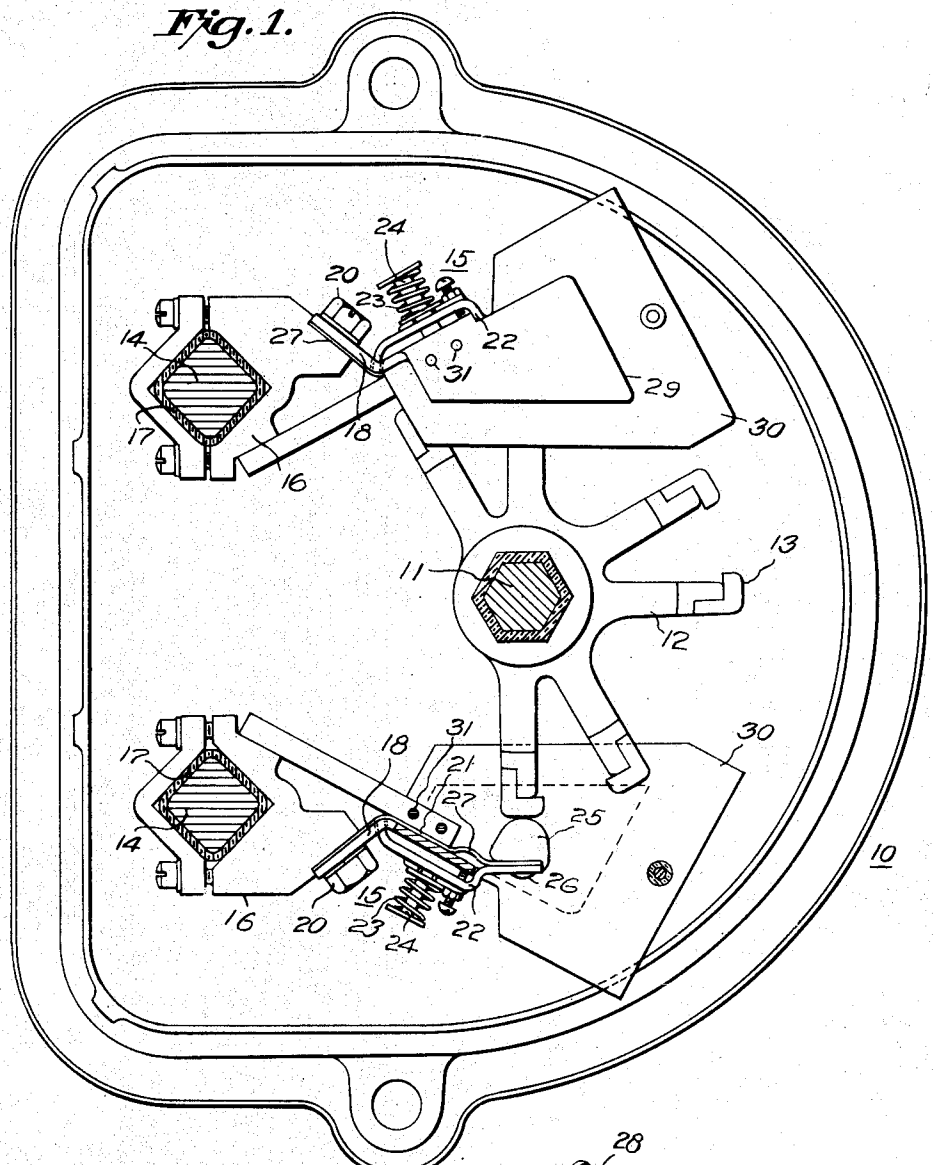

Fig. 2.

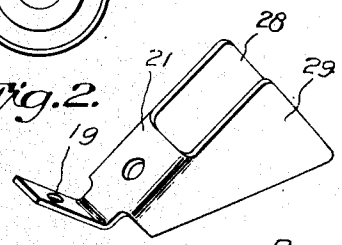

WITNESSES:

R. S. Harrison

E. W. Savage

INVENTOR

Bascum O. Austin

BY Wesley G. Carr

ATTORNEY

Patented Mar. 19, 1929. 1,705,700

UNITED STATES PATENT OFFICE.

BASCUM O. AUSTIN, OF EAST PITTSBURGH, PENNSYLVANIA, ASSIGNOR TO WESTINGHOUSE ELECTRIC & MANUFACTURING COMPANY, A CORPORATION OF PENNSYLVANIA.

CONTROL APPARATUS.

Application filed April 15, 1926. Serial No. 102,202.

This invention relates generally to control apparatus and more particularly to contact fingers provided with arc-rupturing devices.

The object of the invention, generally stated, is the provision of a contact finger having an arc-rupturing device that shall be simple and efficient in operation and readily and economically manufactured.

A more specific object of the invention is to provide for the disrupting of an arc drawn by the opening of an electric circuit at a contact finger.

Another object of the invention is to provide for the using of parts of the contact finger for a plurality of functions in order to simplify the construction

Other objects of the invention will in part be obvious and in part appear hereinafter.

The invention accordingly is disclosed in the embodiment thereof shown in the accompanying drawing and comprises the features of construction, combination of elements and arrangement of parts which will be exemplified in the construction hereinafter set forth and the scope of the application of which will be indicated in the claims.

For a more complete understanding of the nature and objects of the invention, reference may be had to the following detailed description taken in connection with the accompanying drawing, in which

Figure 1 is a horizontal sectional view of a controller provided with contact fingers constructed in accordance with this invention.

Fig. 2 is a perspective view of a portion of the contact finger showing the pole pieces formed integral therewith.

Referring now to the drawing, 10 indicates generally a controller of a well-known type provided with a shaft 11 which carries a spider 12 on which a plurality of contact members 13 are mounted. As will be readily understood, the shaft 11 may be rotatably mounted so that the contact members 13 may be moved forward step-by-step, as desired.

Standards 14 are provided for supporting a plurality of contact fingers, such as shown generally at 15. In order to attach the contact fingers to the standards, two piece brackets 16, which may be clamped in any desired position on the standards, are provided. In this particular construction, the brackets are insulated from the standards by insulating sleeves 17. As shown these sleeves completely enclose the standards 14.

The particular contact finger 15 illustrated is substantially similar to the one disclosed in the copending application of Edward E. Rose, Serial No. 70,535 filed November 21, 1925 and assigned to the Westinghouse Electric & Manufacturing Company. While this type of finger lends itself to the construction of a unit embodying a contact member and an arc-rupturing device, it will be readily understood that this invention might be applied to many other types of contact finger and contact members.

As shown in the drawing, the contact finger 15 comprises a base 18 which is substantially L-shaped, thereby providing an arm for attachment to a bracket 16 and an arm for supporting a contact member. The base 18 may be attached to the bracket in any suitable manner, such as by the provision of a screw bolt 20 which projects through an opening 19 provided in the bracket arm and engages in a threaded opening provided in the bracket.

Movably mounted on the arm of the base 18 which will be designated 21, is a contact carrier 22. As set forth in the application above referred to, the contact carrier is disposed for movement in all directions and is retained in a predetermined position by means of a spring 23 mounted on a post 24 carried by the arm 21 of the base.

A contact member 25 is attached to the outer end of the contact carrier 22 by means of a rivet 26. As illustrated, the contact member 25 is connected to a flexible conductor 27 which extends back along the arm 21 and the bracket arm and is clamped in position by the screw bolt 20. This conductor permits the contact carrier 22 to be moved freely.

In order to concentrate the lines of magnetic force induced by current flowing in the conductor 27, two pole pieces 28 and 29 are formed integral with the arm 21 and disposed to extend on opposite sides of the contact member 22. While in this embodiment of the invention the contact members are formed integral with the arm 21, it will be readily understood that they may be attached to it in any suitable manner, such as by riveting or the like.

The arm 21 and the pole pieces 28 and 29 thus form a channel through which the conductor 27 extends.

In order to confine an arc drawn between the contact member 25 and one of the contact members 13 to a predetermined path, an arc chute 30 is attached to the pole pieces 28 and 29. The arc chute may be of any suitable material, such as asbestos board, and is attached to the pole pieces by means of rivets, as shown at 31.

In operation, when current flows in the conductor 27, it develops a magnetic field. This magnetic field is concentrated by means of the arm 21 which is of magnetizable material and flows into the pole pieces 28 and 29. In completing the magnetic circuit, the lines of magnetic force pass from one pole piece to another, thus providing an arc-rupturing field in which the contact member 25 is disposed.

Assume that one of the contact members 13 is moved out of engagement with the contact member 25 when current is flowing in the conductor 27. This will result in an arc being drawn between the contact finger 13 and the contact member 25. The magnetic field between the pole pieces immediately acts upon the arc and in the usual manner effects a speedy disruption, thereby protecting the contact members. During the disruption process, the arc is confined within the arc chute 30, thereby protecting the operating members of the mechanism provided for actuating the contact members 13 and other parts of the device.

Since certain changes may be made in the foregoing contruction and different embodiments of the invention may be made without departing from the scope thereof, it is intended that all matter contained in the above description or shown in the accompanying drawing shall be interpretive as illustrative and not in a limiting sense.

I claim as my invention:

1. A contact finger comprising, in combination, a base, a contact member movably mounted on the base, extensions formed on the base and disposed to extend on opposite sides of the contact member to provide pole pieces to concentrate lines of magnetic force induced by current flowing in the contact member thereby to form an arc-rupturing field.

2. A contact finger comprising, in combination, a base, a contact finger movably, mounted on the base, a flexible conductor carried by the base and connected with the contact member, pole pieces formed integral with the base and extending on opposite sides of the contact member, said base and pole pieces forming a channel through which said conductor extends thereby to concentrate lines of magnetic force induced by current flowing in the conductor to provide an arc-rupturing field.

3. A contact finger comprising, in combination, a base adapted to be mounted on a support, a contact finger movably mounted on the base, pole pieces formed integral with the base and extending on opposite sides of the contact member, an arc chute carried by the pole pieces and a conductor extending through the channel formed by the base and pole piece and connected with the contact member thereby to utilize the base and pole pieces to concentrate lines of magnetic force induced by current flowing in the conductor.

4. A contact finger comprising, in combination, a base, a contact member pivotally mounted on the base, said contact member extending beyond the base, pole pieces formed integral with the base, said pole pieces extending on the opposite sides of the contact member to concentrate lines of magnetic force induced by current flowing in the contact member to provide an arc rupturing field enveloping the contact member.

5. A contact finger comprising, in combination, a base, a contact member pivotally mounted on the base, extensions formed integral with the base and disposed parallel to one another in spaced relation, to provide pole pieces for concentrating lines of magnetic force induced by current flowing in the contact member thereby to provide an arc-rupturing field, said arc-rupturing field being located to envelope the path of the movable contact member.

In testimony whereof, I have hereunto subscribed my name this 10th day of April 1926.

BASCUM O. AUSTIN.