June 13, 1950 G. JAEGER 2,511,589

MACHINE OR APPARATUS FOR SURFACING ROADS

Filed Nov. 27, 1944 2 Sheets-Sheet 1

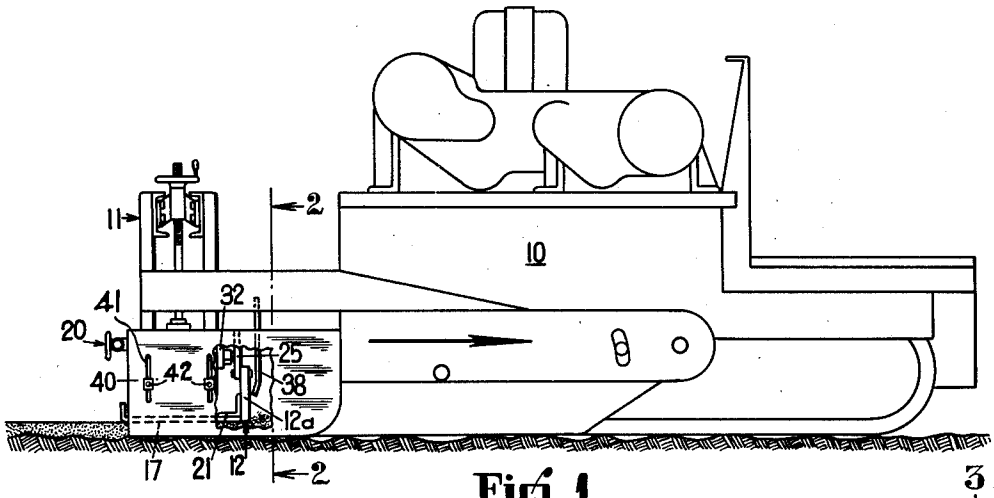

Fig. 1

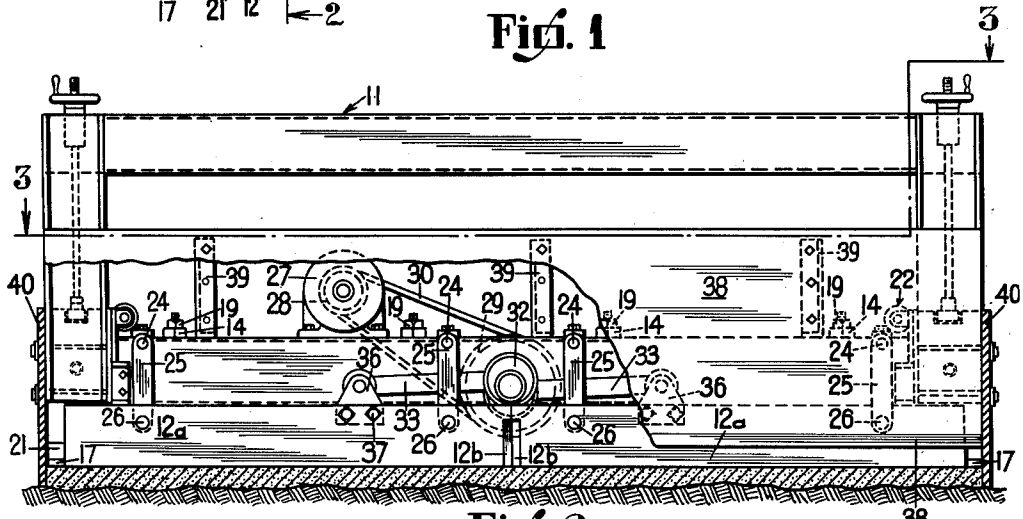

Fig. 2

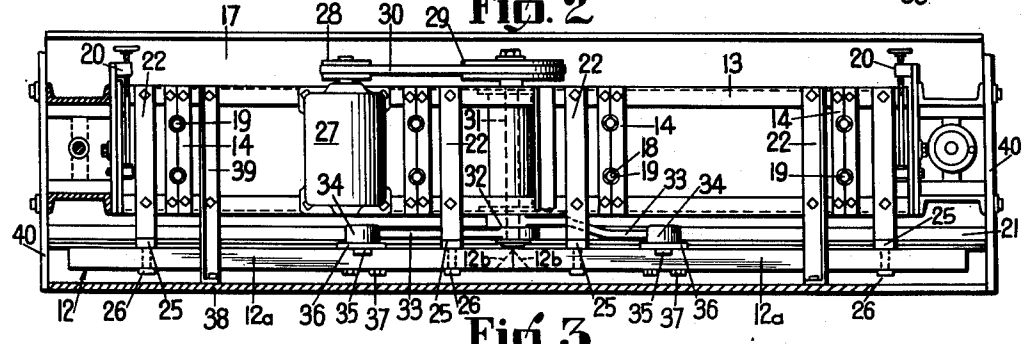

Fig. 3

INVENTOR.
Gebhard Jaeger

BY

Corbett, Mahoney & Miller
ATTORNEYS

June 13, 1950 G. JAEGER 2,511,589

MACHINE OR APPARATUS FOR SURFACING ROADS

Filed Nov. 27, 1944 2 Sheets-Sheet 2

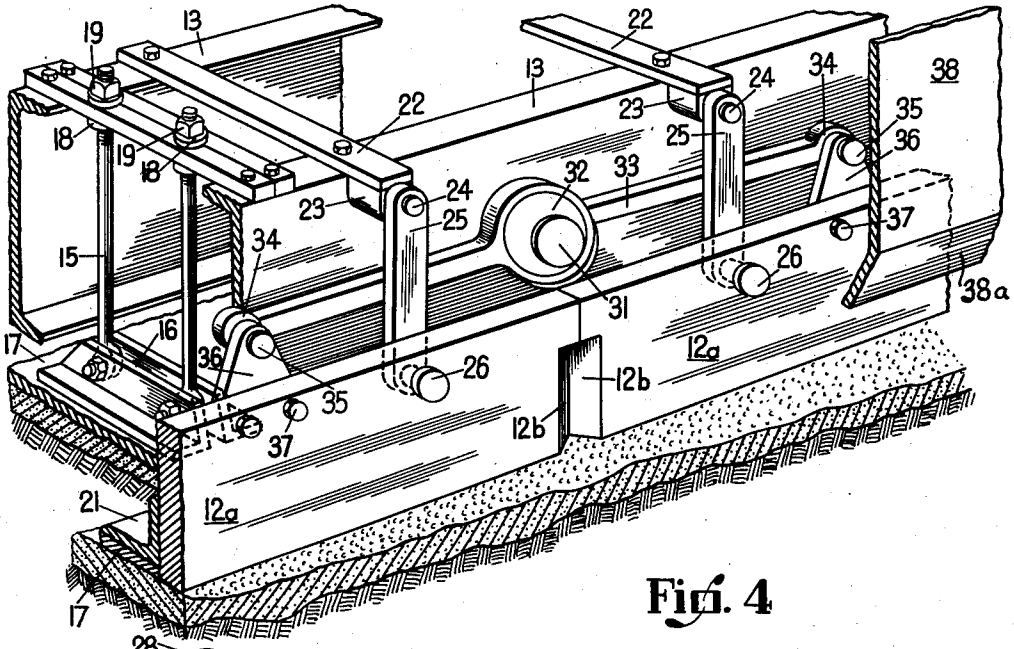

Fig. 4

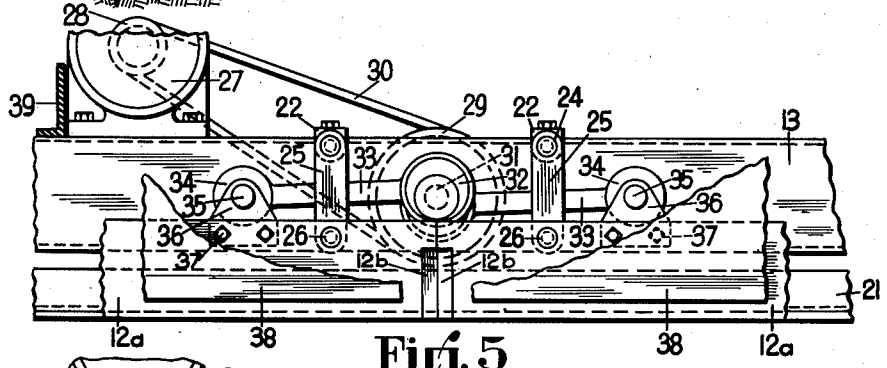

Fig. 5

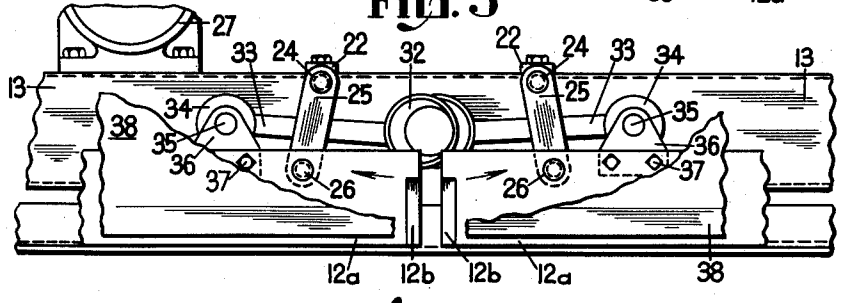

Fig. 6

INVENTOR.
Gebhard Jaeger.

BY

Corbett, Mahoney & Miller
ATTORNEYS

Patented June 13, 1950 2,511,589

UNITED STATES PATENT OFFICE

2,511,589

MACHINE OR APPARATUS FOR SURFACING ROADS

Gebhard Jaeger, Columbus, Ohio, assignor to The Jaeger Machine Company, Columbus, Ohio, a corporation of Ohio

Application November 27, 1944, Serial No. 565,305

6 Claims. (Cl. 94—45)

1

My present invention relates to a machine or apparatus for surfacing roads, such as new roads where forms are used or for resurfacing the original road surface. It has to do more particularly with an oscillating compactor which is adapted to be associated with the screed or screed unit of any conventional type of machine or apparatus of the foregoing character.

One of the objects of my invention is to provide an oscillating compactor unit which is adapted to be used directly on the forward face or portion of a screed, such as a fixed, "dead," or non-oscillating screed.

Another object of my invention is to provide a compactor of the oscillating type which is formed in two sections constituting two upright plates mounted end to end which are adapted to be moved at high speed endwise and up and down relative to one another and in unison.

A further object of my invention is to provide an improved compactor unit comprising two oscillatable plates positioned end to end, which plates are adapted to have imparted thereto endwise motion lengthwise of the screed, which motion results in a wiping action upon the surface to be finished.

Another object of my invention is to provide a compactor of the foregoing character capable of being oscillatable at high speed without impairing the operation of the machine or apparatus of which it forms a part.

Another object of the invention is to provide a machine or apparatus of the foregoing character in which the screed and oscillating compactor are capable of adjustment angularly with relation to the road surface and wherein the screed may be readily adjusted to the desired crown.

A further object of my invention is to provide an oscillating compactor which, in operation, serves to crowd out stones or other objects which might tend to interfere with the proper functioning or operation of the apparatus.

Another object of my invention is to provide an oscillating compactor which is associated with a screed unit and which has a pair of vertically disposed plates or blade members having endwise movement in opposite directions lengthwise of the screed to produce a wiping action upon the surface to be finished by the screed and also up and down movement at high speed to effect the compaction of the material immediately preceding the engagement of said material by the screed.

A further object of the invention is to provide

2

an improved oscillating compactor formed in two sections capable of high speed up and down and endwise movement lengthwise of the screed in association with a screed of the "dead" or non-oscillating type whose forward or lead portion is higher than its rear or trailing portion.

Another object of my invention is to provide an oscillating compactor of the foregoing character which is of relatively simple construction and which may be applied to a screed with ease and facility.

Generally speaking, the machine or apparatus of my invention consists, preferably, of a power driven tractor unit, a screed unit having preferably, a non-oscillatable or "dead" screed drawn by the tractor unit, and an oscillating compactor formed preferably in two sections which is mounted on the forward or lead end of the screed, which sections have imparted thereto up and down and endwise movements in opposite directions in unison lengthwise of the screed, and power means preferably associated with the screed and drivingly connected through eccentric connections with the sections of the compactor to impart thereto the desired oscillating movement at high speed such as from approximately 1000 to 1500 R. P. M.

The foregoing and other objects and advantages of my invention will be apparent from the following description and appended claims when considered in connection with the accompanying drawings forming a part of this specification wherein like reference characters designate corresponding parts in the several views.

In said drawings:

Fig. 1 is a side elevational view, partly broken away, of a machine or apparatus embodying my invention.

Fig. 2 is an enlarged vertical sectional view, partly in elevation and partly broken away, taken substantially along the line 2—2 of Fig. 1, looking in the direction of the arrows.

Fig. 3 is a horizontal sectional view taken substantially along the line 3—3 of Fig. 2, looking in the direction of the arrows.

Fig. 4 is an enlarged fragmentary detail perspective view illustrating the relationship of the central portion of the oscillating compactor of my invention with the material being applied to the road bed.

Fig. 5 is a detail front elevational view, partly broken away, of a fragment of the compactor and screed, and showing the compactor sections, blades or plates in their closed and lowermost position; and

Fig. 6 is a view similar to Fig. 5 but showing the sections or portions of the oscillating compactor in different positions.

Before explaining in detail the present invention it is to be understood that the invention is not limited in its application to the details of construction and arrangement of parts illustrated in the accompanying drawings, since the invention is capable of other embodiments and of being practiced or carried out in various ways. It is to be understood also that the phraseology or terminology employed herein is for the purpose of description and not of limitation, and it is not intended to limit the invention claimed herein beyond the requirements of the prior art.

Referring now particularly to the drawings, in Fig. 1 thereof there is shown as a whole at 10 a power driven tractor unit, a trailing screed unit, shown as a whole at 11, and an oscillating compactor unit, shown as a whole at 12.

The screed unit 11 is connected in any suitable manner to the rear end of the tractor unit 10 so as to be drawn along over the surface by said tractor unit. The screed unit 11, at its lower portion, comprises a pair of spaced channels 13 which carry cross bars 14 which latter support adjusting rods 15 secured at their lower ends to angles 16 carried by the screed member 17. The upper ends of the rods 15 are threaded and extend through bearing sleeves 18 which are supported by the cross bars 14 and which carry nuts 19 engaging the sleeves. The rods 15 and nuts 19 provide means for adjusting the screed member 17 to the desired crown. Additional means, shown as a whole at 20, see Fig. 3, are provided at opposite ends of the channels 13 and serve to tilt or adjust the screed 17 angularly with relation to the surface. The forward or lead end of the screed is normally higher than its rear or following portion. These adjustments and the means for effecting them are substantially the same as those disclosed in the copending application of Obert G. Mandt and Arnold S. Millikin, Serial Number 565,306, now Patent No. 2,473,961.

The screed 17 is provided at its forward edge with a reinforcing angle 21 which extends the full length of the screed. The forward or upright flange of the angle 21 provides a wear plate for the oscillating compactor to be discussed in detail below.

The upper flanges of the channels 13 carry cross bars 22, four such being shown in Figs. 2 and 3. The cross bars 22 carry at their forward ends depending bearing brackets 23 which support pivot pins 24. Each of the pivot pins 24 carries a depending link or pendulum 25 which is connected at its lower end by a pin 26 to the portions or sections 12a of the oscillating compactor unit 12. Thus, the sections or plates 12a of the oscillating compactor unit are suspended from the screed unit for oscillating or pendulum-like movement in opposite directions lengthwise of the screed 17 and crosswise or transversely of the machine.

Each of the plates or members 12a is provided in its outer face and at its inner end with a bevelled portion 12b, see particularly Fig. 4. These bevelled portions 12b, when the plates 12a are moved toward one another, cooperate to crowd out stones or other objects which might tend to interfere with the proper functioning of the apparatus.

Suitable means is provided for oscillating the plates or members 12a of the compactor so as to impart to said members both up and down and endwise movement. Such means, as shown, comprises an electric motor 27 mounted in suitable manner upon the channels 13. The motor shaft carries a pulley 28 which is drivingly connected with a larger pulley 29 through the medium of a drive belt or chain 30. The pulley 29 is mounted upon a horizontal driven shaft 31 which is journalled in suitable bearings in the channels 13. The driven shaft 31 carries at its forward end a pair of cam members or eccentrics 32 each of which has a connecting rod 33 carrying on its outer end a concentric connection or member 34. Each of the members 34 is mounted upon a short shaft 35 carried by a bracket or support 36 which is mounted upon the upper portion of the compactor plate 12a and secured thereto by bolts or the like 37. It will be understood that one such bracket 36 is rigidly attached to each of the plates 12a and that the eccentrics or cranks 32, 33, 34 connect the driven shaft 31 with the oscillatable plates 12a.

A stationary guard plate or shield 38 is mounted upon the forward end of the screed unit in any suitable manner, as by brackets 39, see Fig. 3. The lower end of the guard plate extends inwardly and rearwardly at 38a and terminates adjacent the front face of the oscillating plates 12a. This guard or plate 38 serves as means for pushing the loose material ahead and protects the mechanism for operating the oscillating compactor members 12a.

Floating side plates or forms 40 are mounted upon the machine at opposite ends of the screed unit 11. These plates, as seen in Fig. 1, are provided with vertical slots 41 with which bolts 42 cooperate to permit them to have free up and down movement over the uneven road surfaces at opposite sides of the machine beyond and adjacent to the ends of the screed unit. The plates 40 provide means movable with the machine for determining the side edges of the newly laid material. The screed 17 extends throughout the entire width or space between the forms or plates 40. With all known prior art machines wherein the screeds themselves were oscillated, the screeds could not be long enough to bridge the space between the side plates or forms, there being spaces left between their ends and said side plates or forms. For this reason, finishing operations were required to be performed on the edges of the new surface to correct the irregular or uneven edges of said surface.

The power means, namely the electric motor which is operatively connected to the plates or members 12a of the oscillating compactor unit through the driving connections above described, serves to move or oscillate the members 12a endwise toward and away from one another lengthwise of the screed 17, the eccentric or crank connections and the depending supporting links or pendulum-like connections to the plates, imparting to said plates a combined up and down and endwise motion in unison and at high speed, the speed ranging from approximately 1000 to 1500 R. P. M. This oscillating or swinging movement of the compactor members performs a wiping operation on the surface of the newly laid material and the up and down movement in addition to the endwise movement causes a compaction of said material. As previously stated, the bevelled portions 12b in their movement toward one another crowd out stones or other objects which might have a tendency to enter the space between the members 12a.

While I have shown one preferred form of mechanism for operating the oscillating compactor of my invention, it will be understood that other mechanism may be employed for effecting the necessary and desirable oscillating movement of the plates or sections of the compactor.

Having thus described my invention, what I claim is:

1. In a road surfacing machine, a screed unit, said screed unit including a dead screed member, side form plates mounted at the ends of said screed member, compactor plates supported from said screed unit in end-to-end relationship at the forward side of said dead screed member within said side form plates for engaging and compacting material as the machine moves forwardly before the material reaches said dead screed member, supporting members suspended from said screed unit and connected to both ends of each of said compactor plates for suspending said plates for bodily swinging movement in vertical planes transversely of the machine; said compactor plates in one of their relative positions having their adjacent inner ends substantially in contact and being of such length that their outer ends are spaced from said side form plates, and means for oscillating said compactor plates to produce bodily swinging movement thereof relative to said dead screed member in the vertical planes and to cause the adjacent ends of the compactor plates to alternately move away from each other and then towards each other and to cause simultaneous movement of the outer ends of said compactor plates towards and from said side form plates.

2. Structure according to claim 1 wherein said side form plates are supported by bolt and slot connections from the screed unit for vertical floating movement directly adjacent the ends of said dead screed member.

3. Structure according to claim 1 wherein said compactor plates have cooperating beveled edges on their forward faces at their inner adjacent ends which engage stones tending to enter rearwardly between said ends and deflect them forwardly.

4. Structure according to claim 1 including a guard plate supported by the screed unit and extending from side form plate to side form plate and overlapping the upper portions of said compactor plates.

5. Structure according to claim 1 wherein the suspending means for each compactor plate includes a pendulum link at each end of each plate having its lower end pivoted thereto and its upper end pivoted to the screed unit.

6. Structure according to claim 5 including power means for oscillating the plates in unison and at high speed, a power driven shaft connected to said power means and adapted to be driven thereby, and eccentric connections between said driven shaft and each of said plates.

GEBHARD JAEGER.

REFERENCES CITED

The following references are of record in the file of this patent:

UNITED STATES PATENTS

Number	Name	Date
1,306,353	Reynolds	June 10, 1919
1,386,348	Maxon	Aug. 2, 1921
1,467,243	Fitzgerald	Sept. 4, 1923
1,619,083	Maxon	Mar. 1, 1927
2,138,828	Barber	Dec. 6, 1938
2,199,074	Jackson	Apr. 30, 1940
2,241,299	Finley	May 6, 1941
2,244,297	Heltzel	June 3, 1941
2,248,247	Nichols	July 8, 1941
2,254,743	Jackson	Sept. 2, 1941
2,332,687	Baily	Oct. 26, 1943
2,351,592	Barber	June 20, 1944