May 5, 1970 E. A. HARTBAUER ET AL 3,509,688

PROCESSING CARTONS FOR PACKAGING THEREOF

Filed April 24, 1967 13 Sheets-Sheet 1

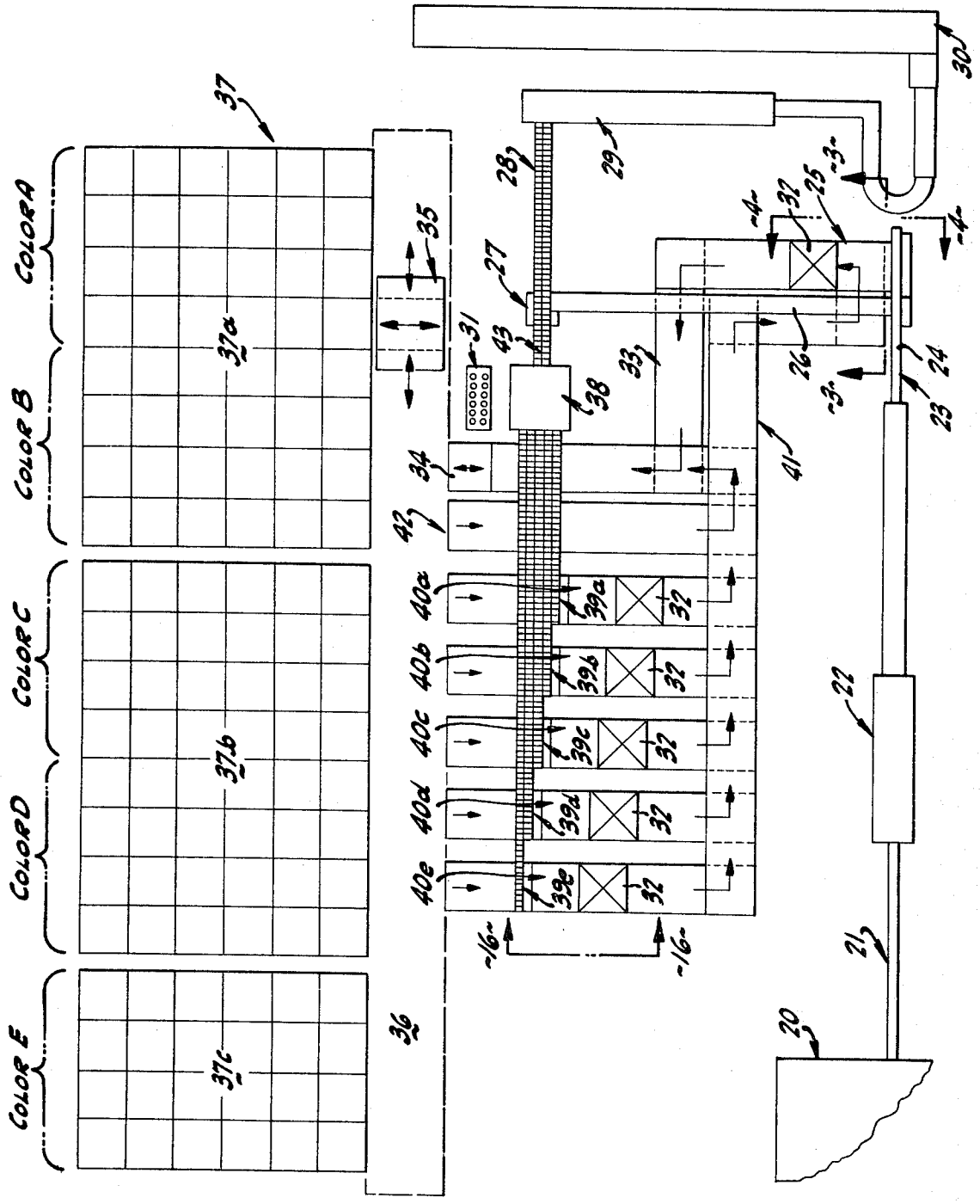

FIG. 1

INVENTORS
ELLSWORTH A. HARTBAUER
HENRY W. REHR
DONALD F. KOWALICK
JOHN W. WYATT

BY

Stanley Bialos
ATTORNEY

May 5, 1970 E. A. HARTBAUER ET AL 3,509,688

PROCESSING CARTONS FOR PACKAGING THEREOF

Filed April 24, 1967 13 Sheets-Sheet 2

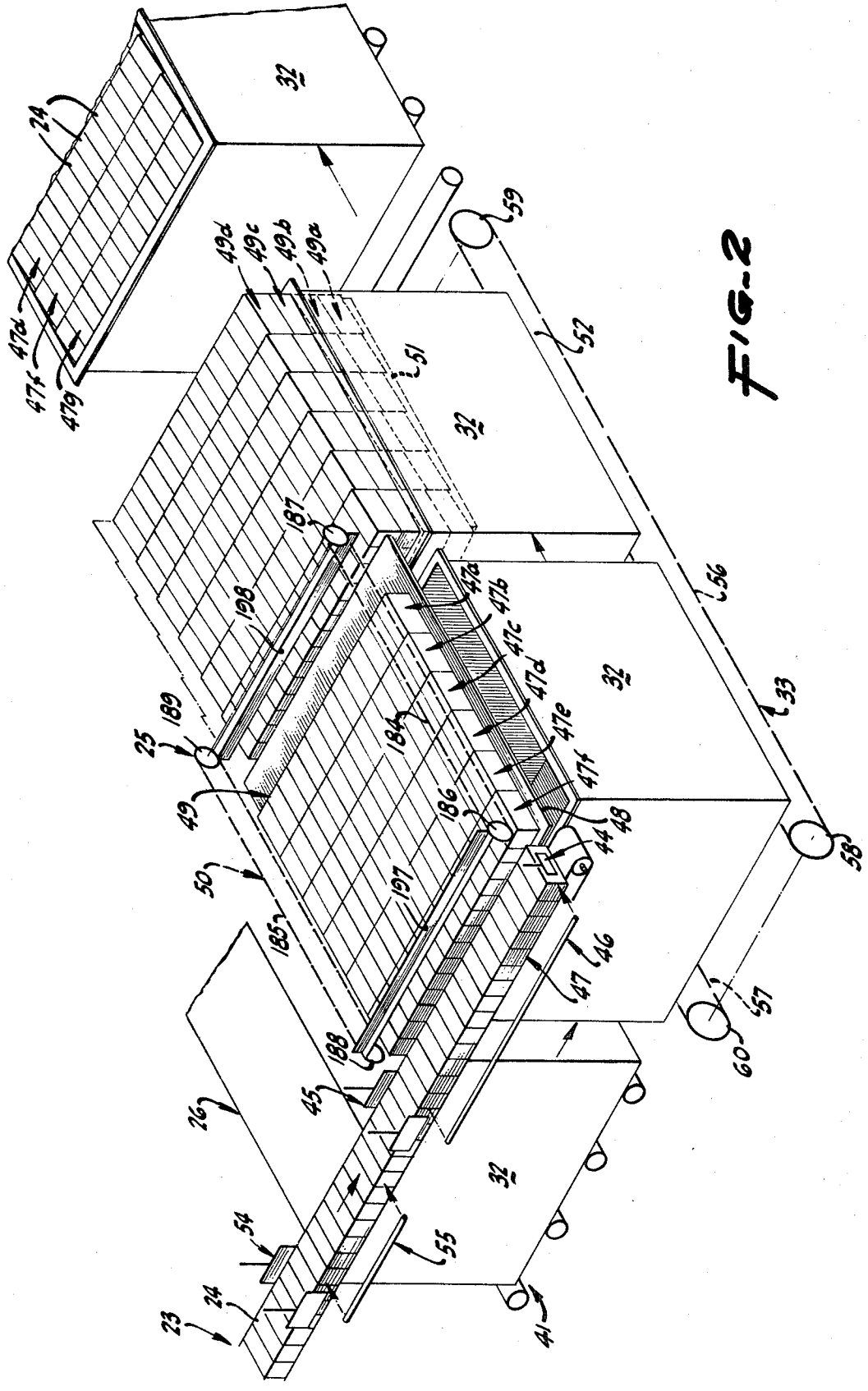

FIG-2

May 5, 1970 E. A. HARTBAUER ET AL 3,509,688

PROCESSING CARTONS FOR PACKAGING THEREOF

Filed April 24, 1967 13 Sheets-Sheet 3

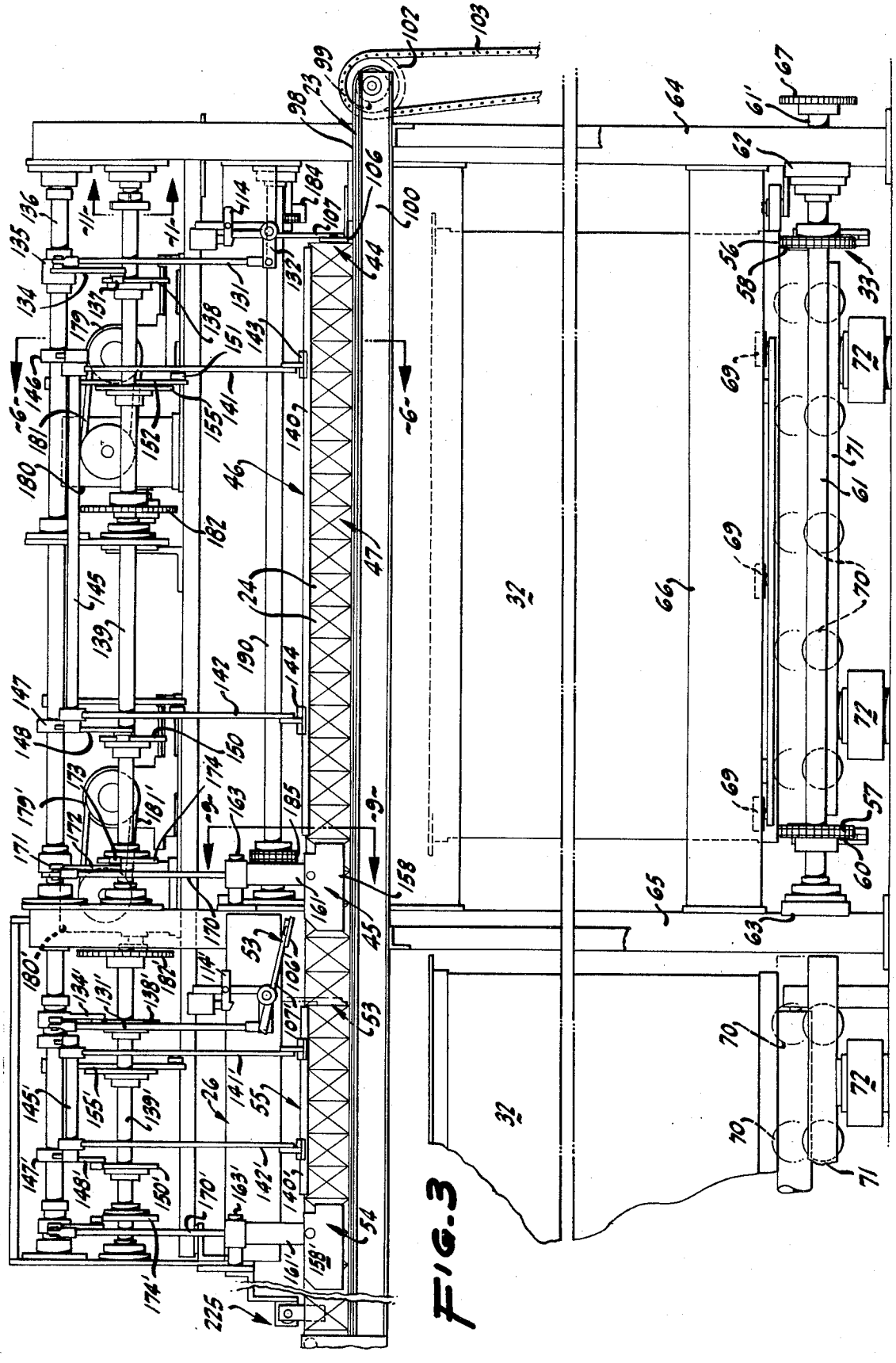

FIG. 3

May 5, 1970 E. A. HARTBAUER ET AL 3,509,688

PROCESSING CARTONS FOR PACKAGING THEREOF

Filed April 24, 1967 13 Sheets-Sheet 4

FIG. 4

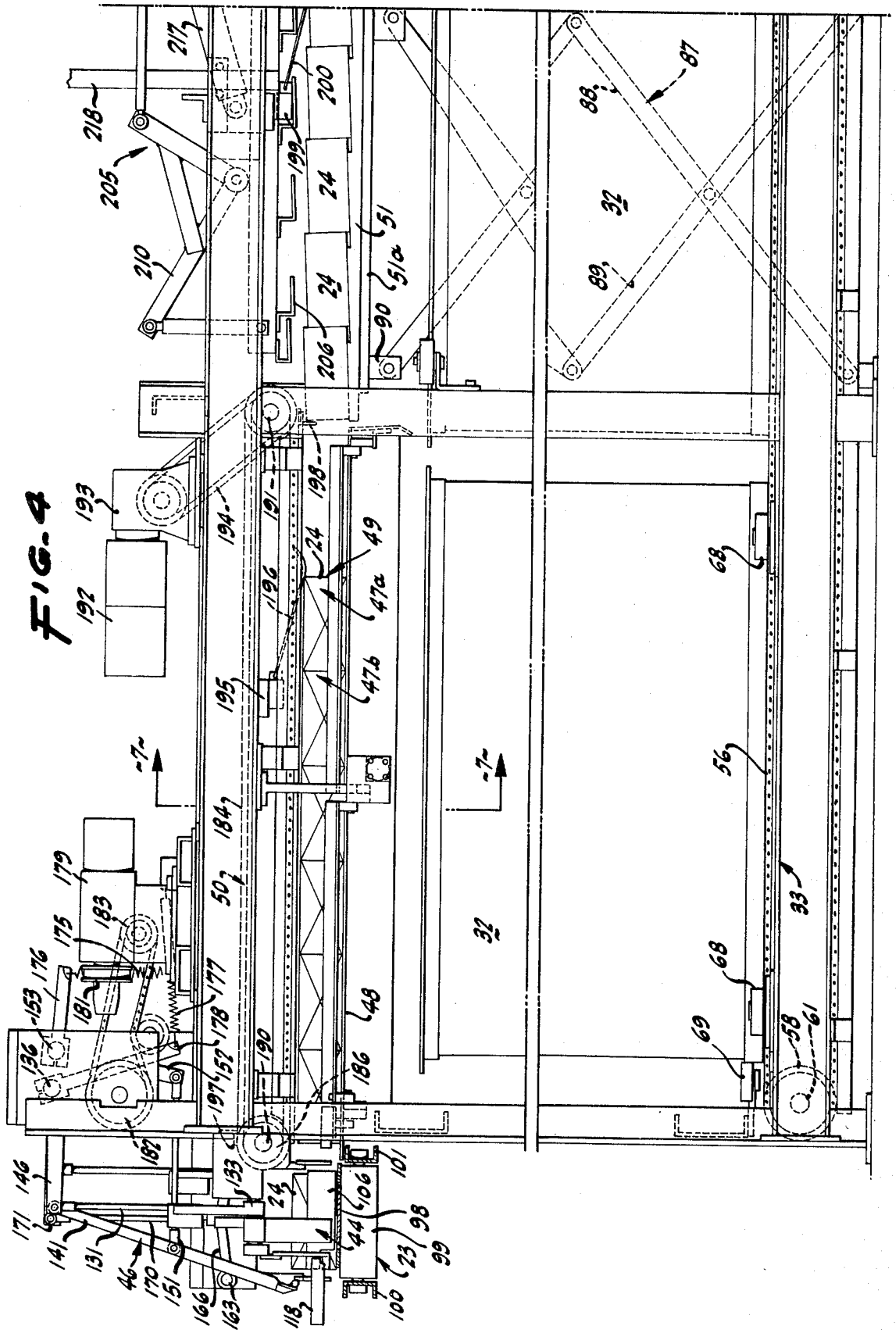

PROCESSING CARTONS FOR PACKAGING THEREOF

Filed April 24, 1967 13 Sheets-Sheet 5

FIG. 5

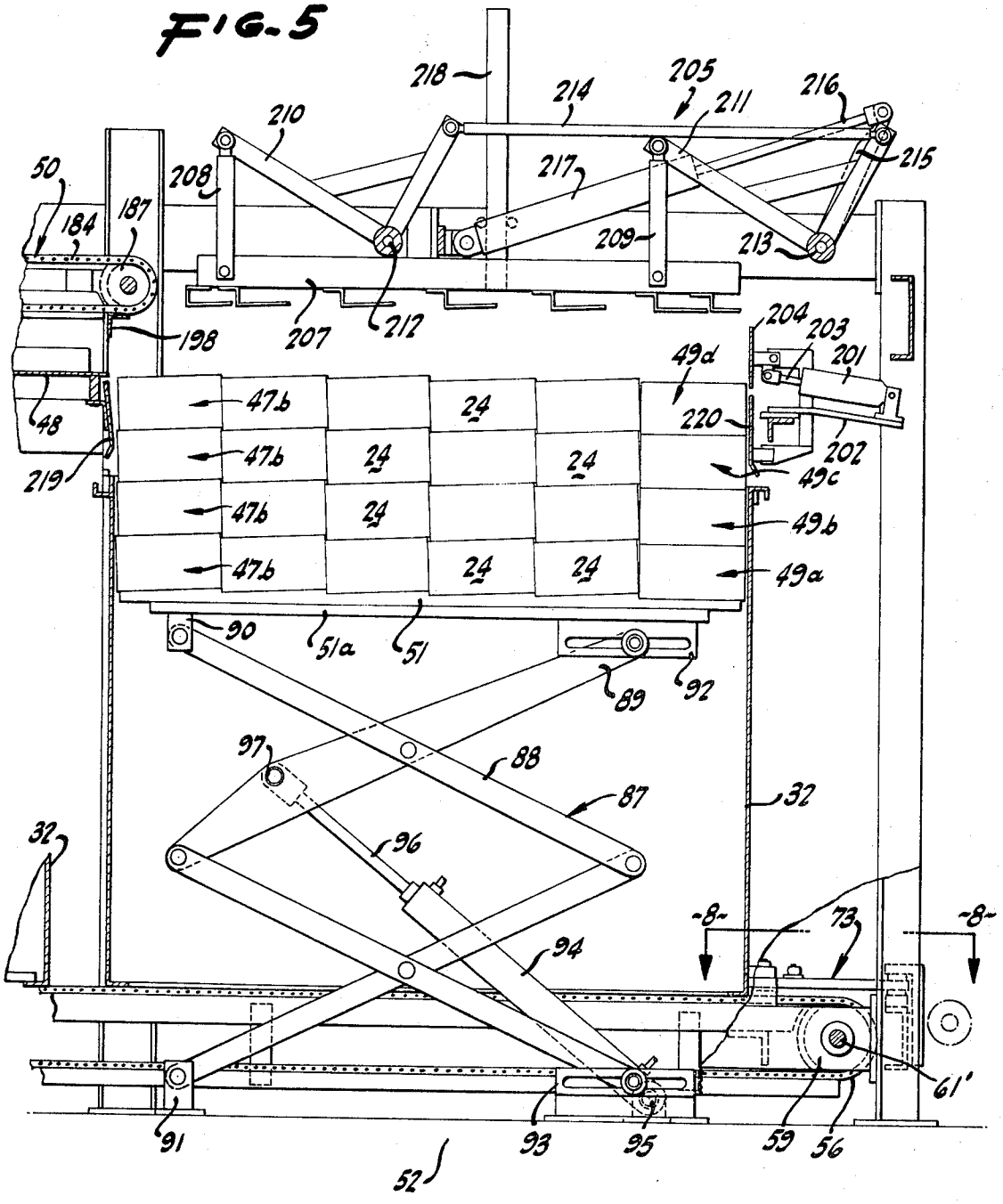

FIG-6

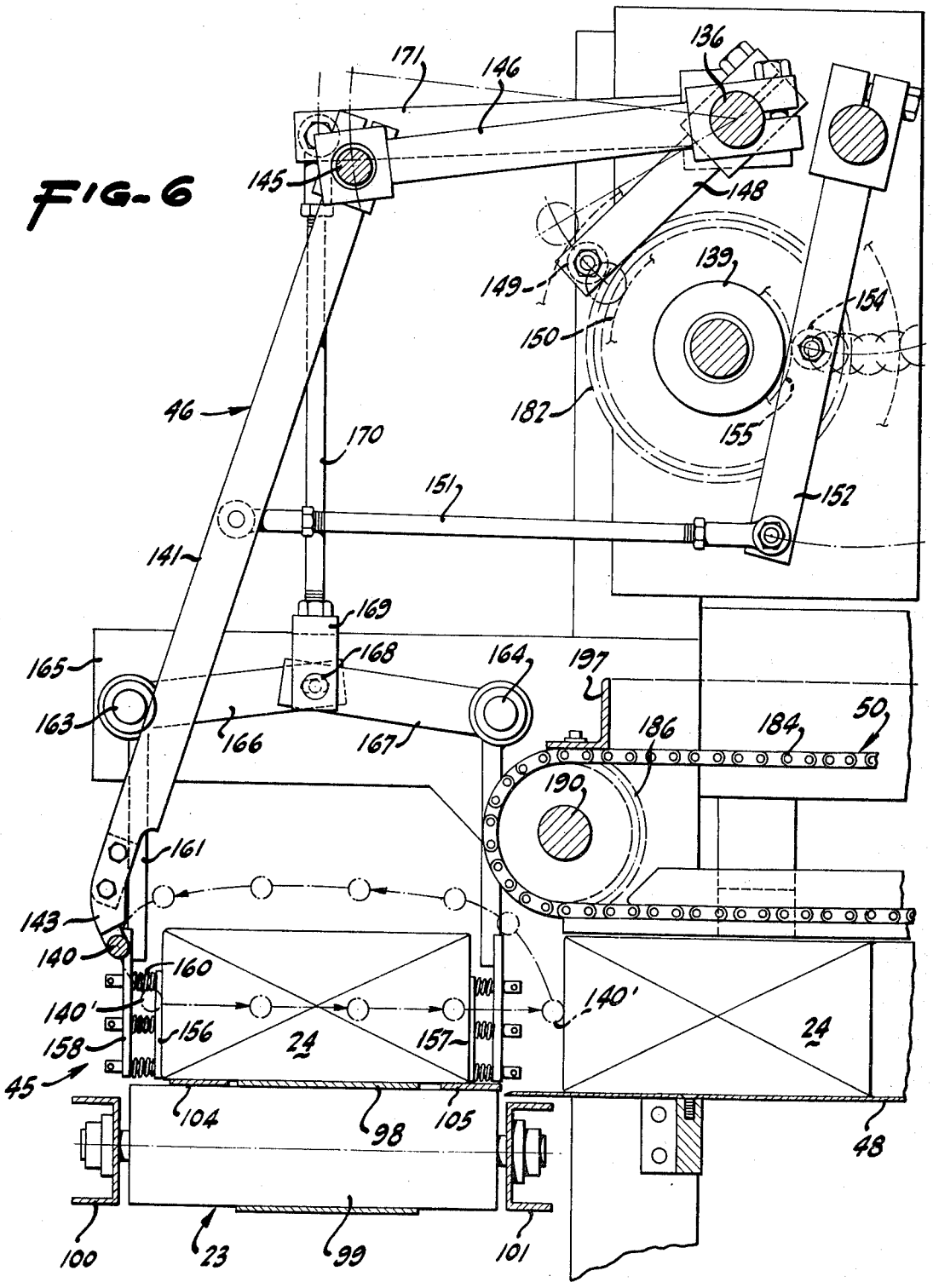
171
146
136
145
148
149
139
154
150
182
155
46
170
151
152
141
169
168
165
164
197
163
166
167
186
184
50
190
161
143
140
160
140'
156
24
157
158
45
104
98
105
48
100
23
99
101

May 5, 1970 E. A. HARTBAUER ET AL 3,509,688

PROCESSING CARTONS FOR PACKAGING THEREOF

Filed April 24, 1967 13 Sheets-Sheet 7

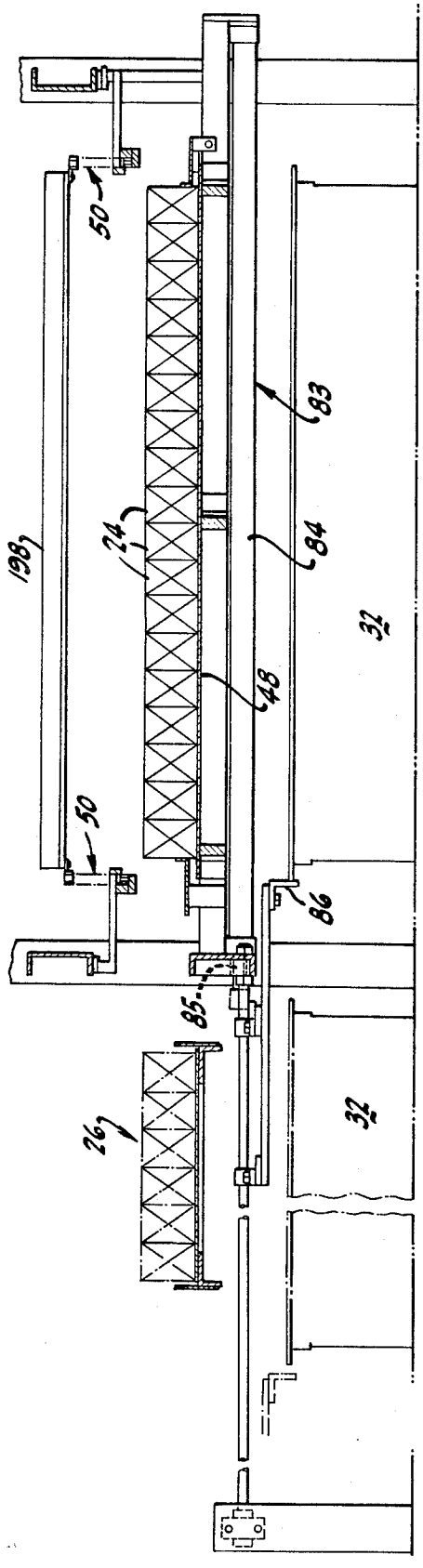

FIG. 7

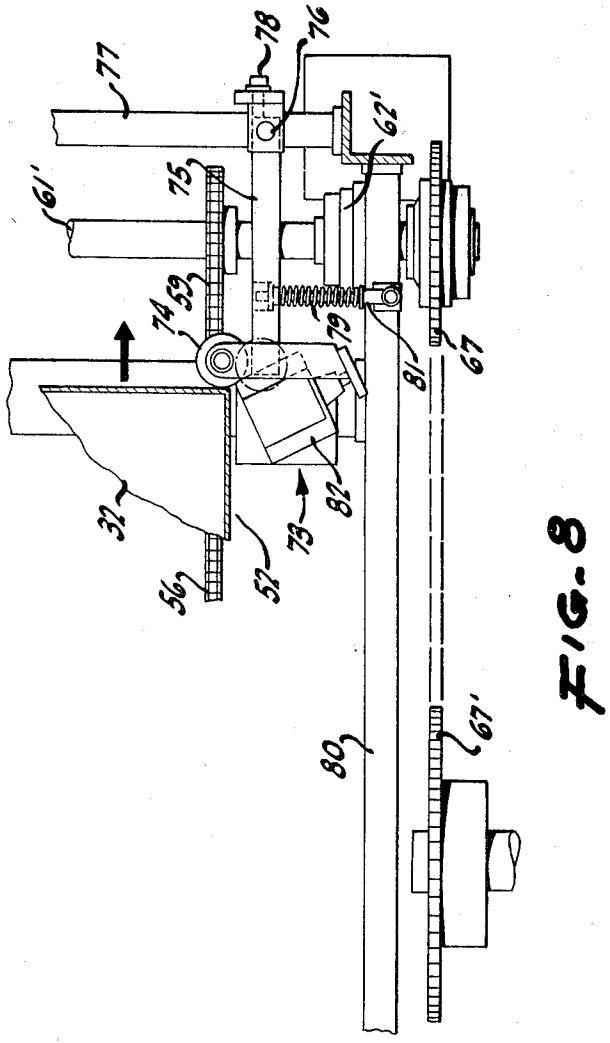

FIG. 8

FIG-10

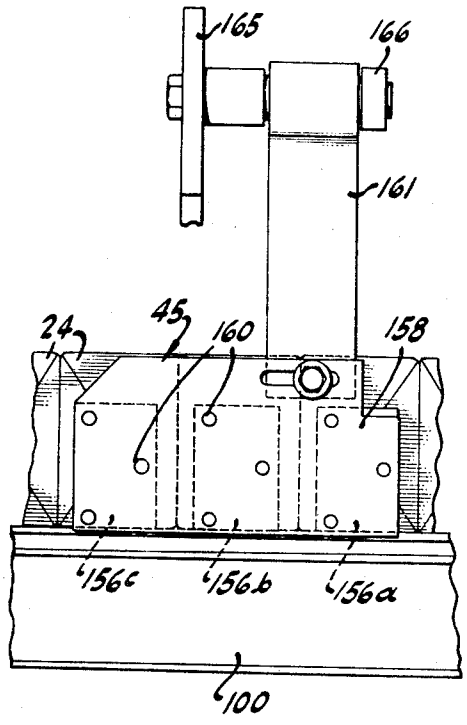

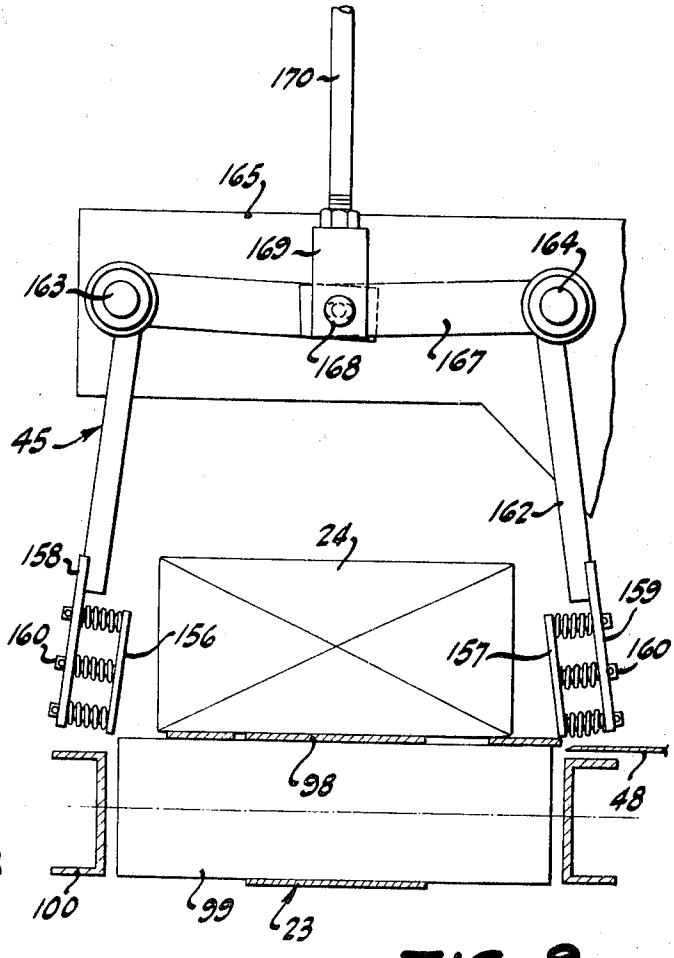

FIG-9

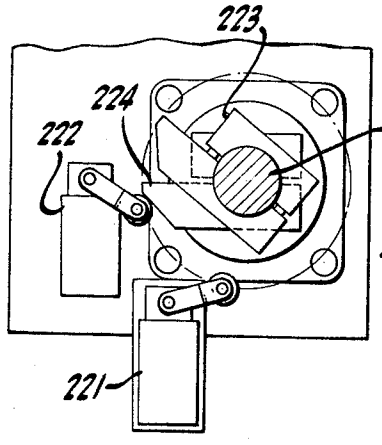

FIG-11

May 5, 1970 E. A. HARTBAUER ET AL 3,509,688

PROCESSING CARTONS FOR PACKAGING THEREOF

Filed April 24, 1967 13 Sheets-Sheet 9

FIG. 12

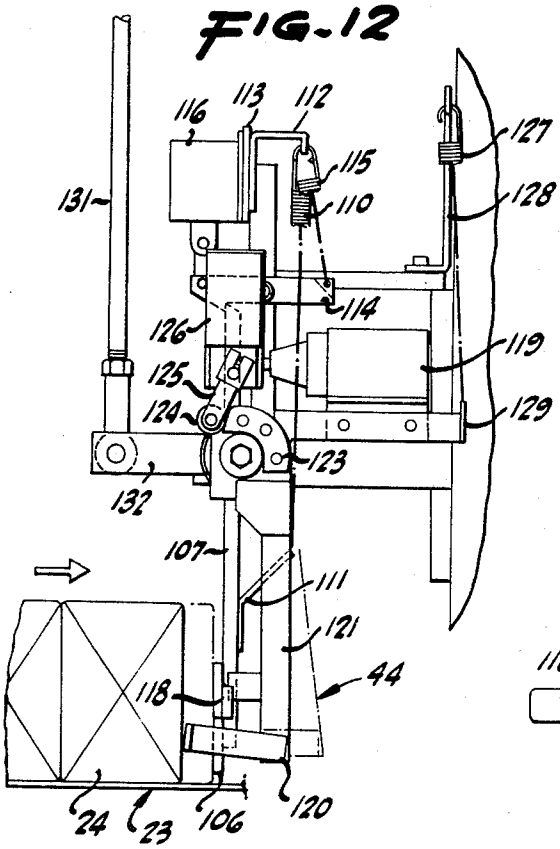

FIG. 13

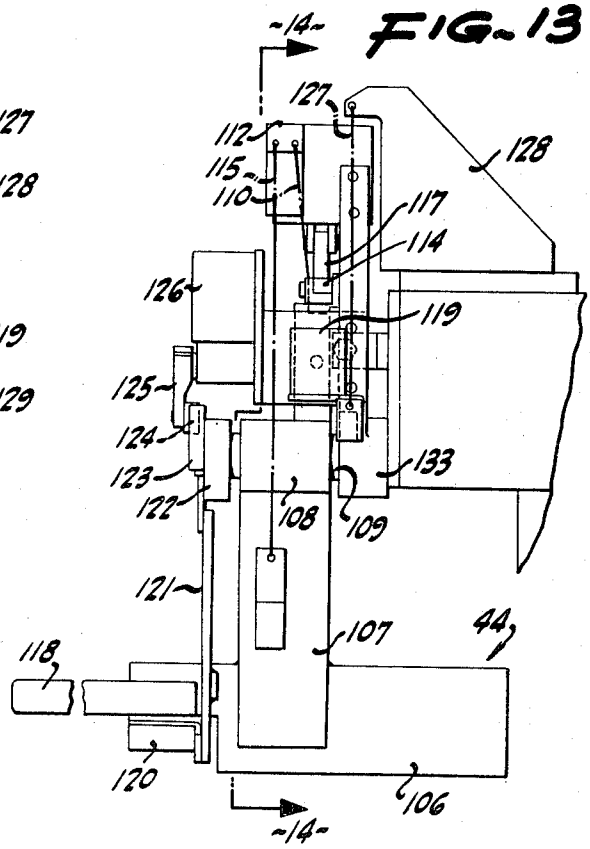

FIG. 14

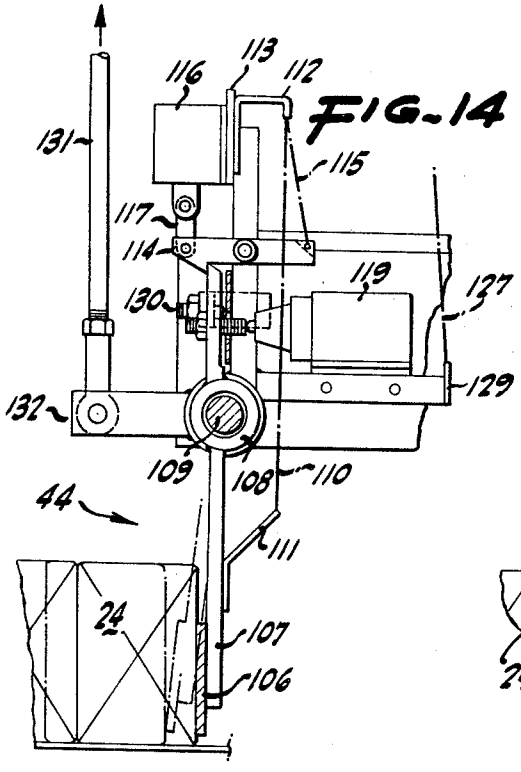

FIG. 15

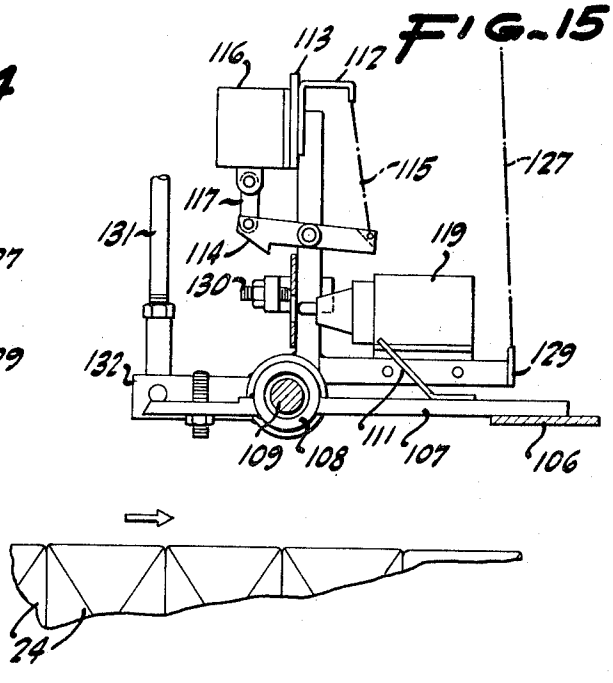

PROCESSING CARTONS FOR PACKAGING THEREOF

Filed April 24, 1967 13 Sheets-Sheet 10

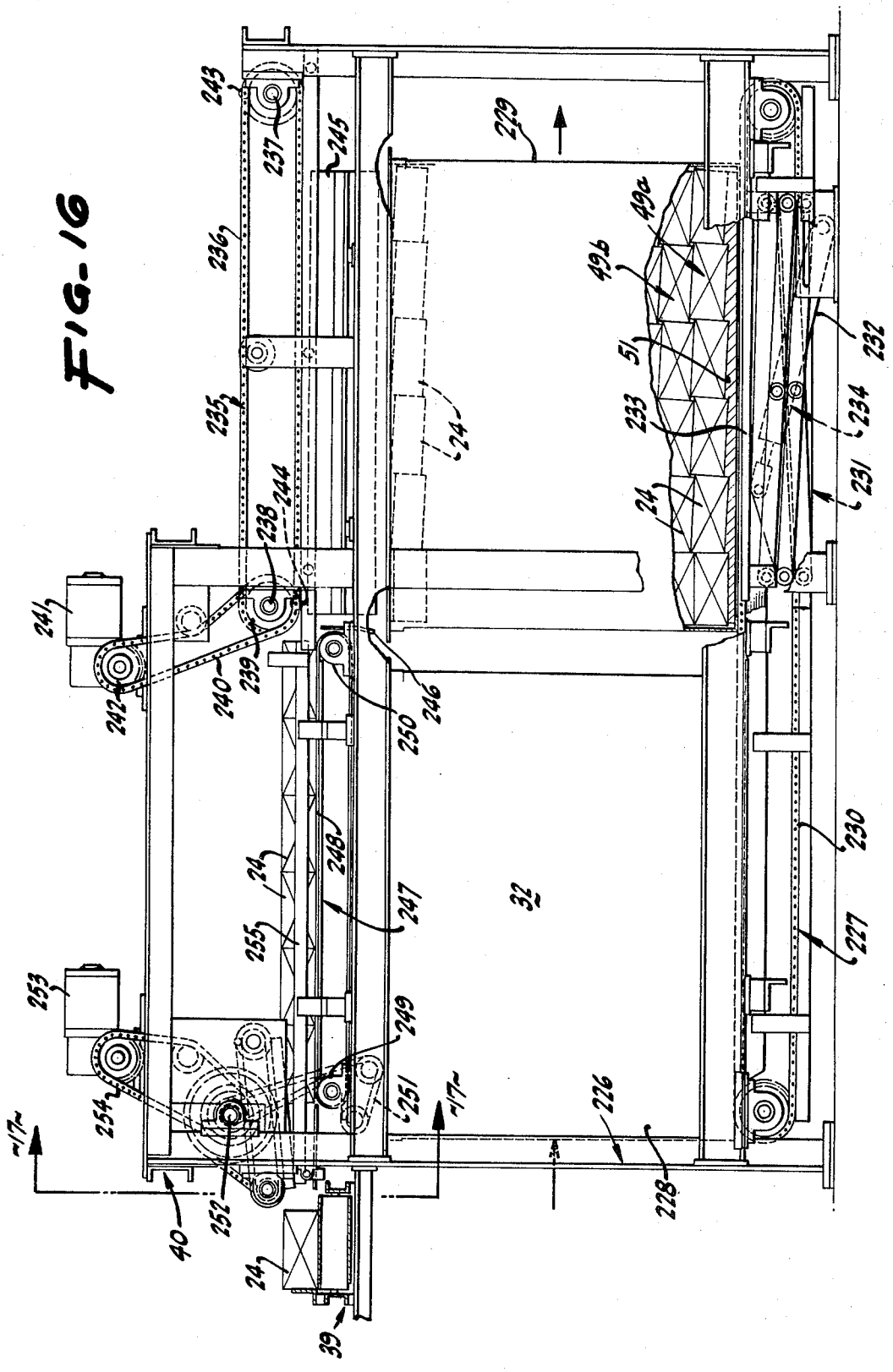

FIG. 16

May 5, 1970 E. A. HARTBAUER ET AL 3,509,688

PROCESSING CARTONS FOR PACKAGING THEREOF

Filed April 24, 1967 13 Sheets-Sheet 11

FIG. 17

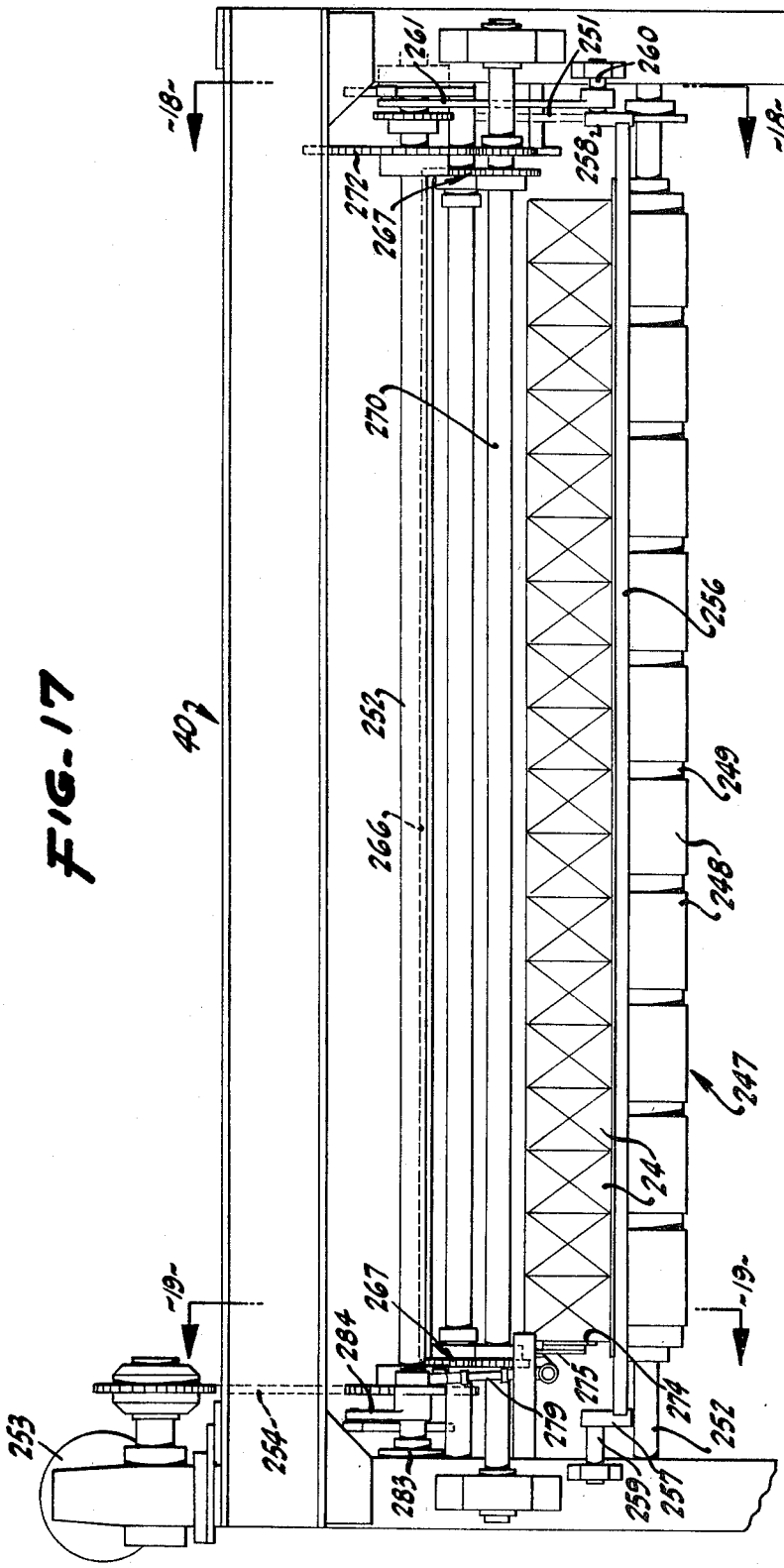

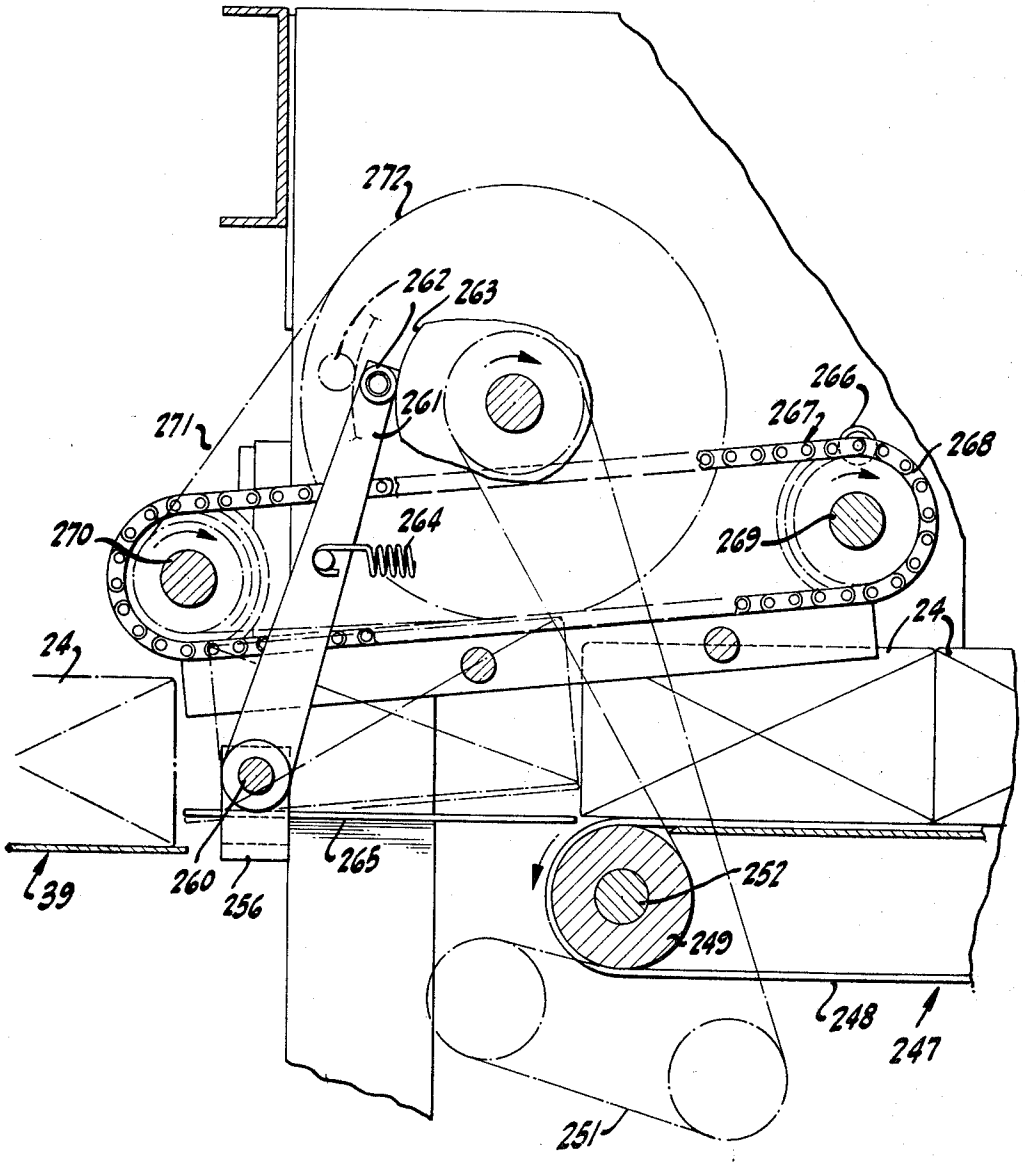
272
262
263
261
271
266
267
268
270
264
269
24
24
39
260
256
265
252
249
248
247
251

FIG. 18

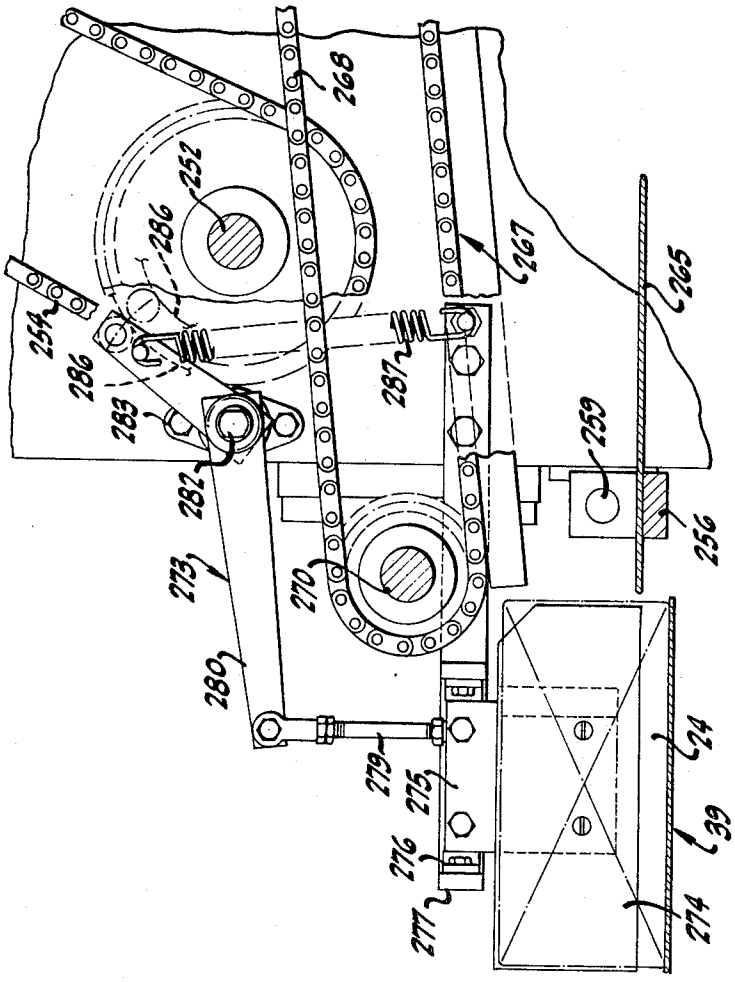
268
252
286
267
265
254
286
287
283
259
282
256
273
270
280
24
279
275
39
276
277
274

FIG-19

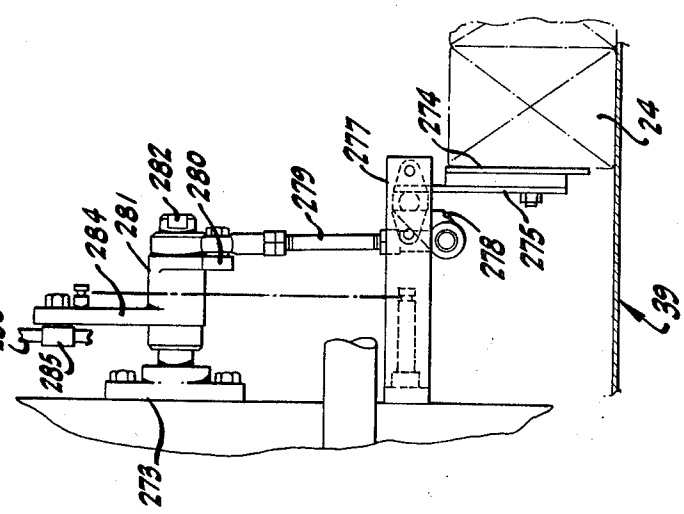
274
24
277
282
280
279
284
281
278
275
286
39
285
273

FIG-20

United States Patent Office 3,509,688 Patented May 5, 1970

3,509,688

PROCESSING CARTONS FOR PACKAGING THEREOF

Ellsworth A. Hartbauer, Antioch, Henry W. Rehr and Donald F. Kowalick, Concord, Calif., and John W. Wyatt, Auburn, Ala., assignors to Crown Zellerbach Corporation, San Francisco, Calif., a corporation of Nevada

Filed Apr. 24, 1967, Ser. No. 633,157
Int. Cl. B65b 35/40
U.S. Cl. 53—163 19 Claims

ABSTRACT OF THE DISCLOSURE

Method of and apparatus for handling cartons of facial tissue prior to packaging the same in shipping containers therefor. Such handling involves transient storage of individual cartons in metal receptacles called tote boxes each of which is sufficiently large to hold a great number of cartons; and the apparatus employed in such handling includes a tote box loader operative to fill each such tote box with facial tissue cartons for storage thereof, and further includes a tote box unloader for subsequently removing facial tissue cartons from tote boxes preparatory to packaging the cartons in shipping containers therefor. Such transient storage of facial tissue cartons prior to packaging thereof enables cartons containing variously colored tissue to be accumulated so as to permit cartons respectively containing tissue of different color to be packaged in a single shipping container.

The method includes the step of group processing cartons of facial tissue so that a plurality of cartons are handled at a time; and in this respect, loading of a tote box with cartons comprises collecting the same group-by-group to form a layer thereof and then placing the collected cartons within a box layer-by-layer. Subsequently, the cartons are unloaded from the tote boxes layer-by-layer, and cartons of one color are assembled with cartons of different colors for eventual packaging as mixed lots in shipping containers therefor.

This invention relates to a method of and apparatus for packaging cartons of paper facial tissue in shipping containers ir cases therefor; and, in greater particularity, the invention relates to group processing facial tissue cartons for transient storage thereof preparatory to packaging mixed-lot cases of colored facial tissue.

For many years paper facial tissue has been packaged in cartons for sale to the consumer through retail outlets; and until quite recently white has been the only color in which facial tissue was available. At present, however, tissue is being offered in several different colors; and although there has been consumer acceptance of all such colors, it has been found that the rate of purchase varies as between different colors. This variation in rate of purchase, or sale to the consumer, has been burdensome to many retail outlets in that such outlets tend to become overstocked in certain colors in those instances where cartons containing tissue of any one color are ordered in case lots.

To avoid this situation, retailers have adopted the practice of ordering cartons of facial tissue in mixed-lot cases comprising several different colors. For example, a case of tissue may consist of 36 (24 is another common number) individual cartons, and a typical order might be for 11 cartons of white tissue, 8 cartons of blue tissue, 7 of yellow, 6 of green, and 4 of pink. Thus, there is imposed upon the tissue manufacturer the requirement for packaging mixed-lot cases of tissue, thereby necessitating the

availability of tissue in each of the various colors before packaging thereof can begin.

Unless several facial tissue lines are to be operated concurrently—one for each of the various tissue colors desired (which in the usual case is not practicable), it is necessary to accumulate and store a substantial number of cartons of each color before cartons in all of the desired colors are available for packaging thereof to form mixed-lot cases. By way of indicating the magnitude of the accumulation facilities required, a particular facial tissue line may use supply or parent rolls of paper sufficiently large to provide a continuous run of several hours (e.g., six or more) before the rolls are depleted and require replacement. Evidently, because of the large number (e.g., 100 or more) of parent rolls that may supply tissue concurrently, it is economically infeasible to interrupt a run prior to depletion of the parent rolls to change the color of the tissue being processed, and clearly then this means that facilities for accumulating and storing the enormous total production of several runs must be provided before mixed-lot cases can be packaged.

The present invention is especially useful in processing cartons of facial tissue for transient storage thereof prior to such cartons being used in packaging mixed-lot cases, and in such transient storage, a great plurality of individual cartons are stored within large metal receptacles which are referred to herein as tote boxes. As respects this invention, an object thereof, among others, is to provide a method of and apparatus for group processing cartons of facial tissue and the like and for accumulating cartons group-by-group to form a layer thereof and for thereafter loading a tote box with cartons layer-by-layer. The invention further includes a method of and apparatus for unloading each such tote box layer-by-layer preparatory to packaging the cartons of facial tissue in a shipping container therefor. Additional objects and advantages of the invention, especially as concerns particular features and characteristics thereof, will become apparent as the specification develops.

An embodiment of the invention is illustrated in the accompanying drawings in which:

FIG. 1 is a block diagram illustrating an entire box facial tissue production system embodying the invention;

FIG. 2 is a diagramatic perspective view of the tote box loader component of the tissue production system;

FIG. 3 is a broken, transverse sectional view of the tote box loader and by-pass section therefor taken along the plane 3—3 of FIG. 1;

FIG. 4 is a broken, longitudinal sectional view of the tote box loader taken along the plane 4—4 of FIG. 1;

FIG. 5 is an enlarged, longitudinal sectional view similar to that of FIG. 4 but being confined to the apparatus shown in the right hand portion thereof;

FIG. 6 is avertical sectional view through the entrance end of the tote box loader taken along the line 6—6 of FIG. 3;

FIG. 7 is a vertical sectional view, oriented transversely through the tote box loader, taken along the line 7—7 of FIG. 4;

FIG. 8 is a horizontal sectional view of the discharge end portion of the tote box loader taken along the plane 8—8 of FIG. 5;

FIG. 9 is a vertical sectional view through the entrance end of the tote box loader taken along the line 9—9 of FIG. 3;

FIG. 10 is a broken end view of the apparatus illustrated in FIG. 9 as observed from the left hand side thereof;

FIG. 11 is a broken, vertical sectional view taken along the line 11—11 of FIG. 3;

FIG. 12 is an enlarged elevational view of the mechanism shown in FIG. 3 adjacent the right hand end portion of the infeed conveyor (immediately below the section line **11—11**);

FIG. 13 is an end view looking from right to left of the mechanism illustrated in FIG. 12;

FIG. 14 is a vertical sectional view taken along the plane **14—14** of FIG. 13 and illustrating the abutment position of the stop structure;

FIG. 15 is a vertical sectional view substantially the same as that of FIG. 14 but illustrating the stop in the release position thereof;

FIG. 16 is a longitudinal sectional view taken along the plane **16—16** of FIG. 1 illustrating a tote box unloader in side elevation;

FIG. 17 is a broken, vertical sectional view taken along the line **17—17** of FIG. 16;

FIG. 18 is an enlarged vertical sectional view taken along the line **18—18** of FIG. 17;

FIG. 19 is an enlarged vertical sectional view taken along the line **19—19** of FIG. 17; and

FIG. 20 is a broken end view looking from left to right of the mechanism illustrated in FIG. 19.

GENERAL DESCRIPTION

An entire box facial tissue fabrication line is illustrated in FIG. 1, and referring thereto it will be noted that such line includes a back stand generally denoted with the numeral **20**. The back stand **20** constitutes a plurality of individual parent rolls (not shown) of tissue totaling, in the usual instance, **102** separate rolls each providing a web which is slit longitudinally as it is withdrawn from the roll into two individual webs each of facial tissue width (usually about 8½ inches wide). The paper webs are withdrawn concurrently from the parent rolls, and as such individual webs are advanced, they are folded into the desired size and are stacked one upon another to form a longitudially extending "log" **21** comprising 204 individual webs oriented in vertical juxtaposition.

The log **21** is advanced into a saw and cartoning machine **22** which severs the log transversely at spaced-apart locations therealong to section the same into facial tissue lengths, and then places each such section into a carton therefor which is thereafter closed and advanced along a conveyor **23**. Accordingly, the conveyor **23** has disposed therealong a succession of individual cartons oriented in side-by-side juxtaposition, which cartons are denoted with the numeral **24**.

As concerns the present invention, the back stand **20**, cartoning machine **22** and each of the cartons of tissue may be completely conventional and, as is well known, each such carton as a typical example, will contain 200 double-ply tissues folded into a C-shaped or Z-shaped configuration.

Adjacent the end of the conveyor is a tote box loader **25** and also a by-pass conveyor section **26** which terminates at a diverter **27**. Associated with the diverter **27** is a discharge conveyor **28** which empties into a case packer **29** operative to place a group of cartons **24** (usually totaling 36) into a shipping case. After the shipping case has been packed it can be placed upon a pallet in a palletizer **30**. The case packer **29** and palletizer **30** may be conventional pieces of equipment as respects the present invention.

Whether the cartons **24** are advanced through the by-pass section **26** or are advanced into the tote box loader **25** is a matter of manual selection made by an operator controlling the entire fabrication line by means of a control console **31**. When the selection is such that the cartons **24** are advanced into the loader **25**, the cartons are collected into individual layers comprising a plurality of transversely extending and longitudinally extending rows, and the cartons are then displaced layer-by-layer into a tote box **32** which, in the specific structure being considered, is sufficiently large to receive therein 972 individual cartons. After the tote box **32** has been loaded with cartons, it is advanced along a conveyor structure **33** to a pickup station **34** where it is grasped by a storage bank loader **35** selectively movable along an elongated track **36**.

Disposed along the track **36** is a storage bank **37** adapted to accommodate, in the apparatus shown, cartons containing tissue of five separate colors. For this purpose, the storage bank **37** is divided into five sections of equal capacity, which equality of capacity is not essential, respectively denoted by brackets and designated by the legends Color A through Color E. Each such section comprises a plurality of vertically stacked tiers each of which includes a plurality of tandemly disposed tote-box-receiving compartments. The storage bank loader **35** is movable along the track **36** to the pickup station **34** where it grasps a loaded tote box **32**, then carries such tote box to the appropriate color section of the storage bank **37**, elevates the tote box to an appropriate tier and row thereof, and finally displaces the tote box into the forwardmost compartment of such row from which the box enters the particular compartment intended therefor.

Ultimately, the storage bank **37** will contain a relatively large number of cartons of variously colored tissue, and a large capacity for the storage bank is required because a period of several hours of operation follows each loading of the back stand **20** with parent rolls of any one color. By way of example: a loaded back stand may accommodate a continuous period of operation of about six to eight hours, and a production line cannot practicably be changed over from the cartoning of one color to the cartoning of another until the back stand **20** is depleted. Therefore, the storage bank **37** must be able to accommodate an entire run of each of four colors (assuming a 5-color operation) before cartons containing the fifth color can be packaged and shipping cases packed with cartons of each color. By way of indicating the size of the storage bank **37**, it may have a capacity of 640 tote boxes containing 622,080 cartons of facial tissue so that each such color section will have a capacity of 128 tote boxes. The particular storage bank illustrated is comprised of three separate structural components denoted **37***a*, **37***b* and **37***c*, but the arrangement is a matter of choice.

The number of cartons of each color of tissue which will be packed in any one case is predetermined, and cartons in appropriate number and color in accordance with such determination are automatically delivered to the aforementioned discharge conveyor **28** by a color selector mechanism **38**. The delivery of cartons to the selector **38** is effected by a plurality of infeed conveyors **39***a*–**39***e*, respectively adapted to receive cartons containing the various tissue colors. The infeed conveyors **39***a*–**39***e* receive cartons from a group of tote box unloaders **40***a*–**40***e* respectively associated with the infeed conveyors **39***a*–**39***e*. Loaded tote boxes are delivered to the unloaders **40** by the storage bank loader **35** which withdraws such tote boxes from the storage bank **37** on command from the control console **31**.

After a tote box has been emptied by an unloader **40**, the empty tote box is advanced along a return conveyor **41** to the tote box loader **25** where it is available for a subsequent loading cycle. In the case where a sufficient supply of empty tote boxes **32** is available for use at the tote box loader **25**, additional empty tote boxes may be diverted onto the conveyor structure **33** for return to the pickup station **34** from which it is deposited by the storage bank loader **35** into the storage bank **37**. Should a need arise at the tote box loader **25** for additional empty tote boxes, they may be withdrawn from the storage bank **37** and delivered to the return conveyor **41** via a conveyor section **42**.

A continuous supply of cartons of variously colored tissue is delivered by the infeed conveyors **39** to the selector **38**, and the selector is operative to select and segregate or separate from such supply the requisite number of cartons of each tissue color and to arrange the separated

cartons into two rows along a combining or assembly table **43** from which the cartons are advanced onto the discharge conveyor **28**. As explained heretofore, the conveyor **28** advances such two rows of cartons into the case packer **29** which functions in a conventional manner to pack such cartons into a shipping case. Evidently, the diverter **27** must be conditioned selectively to receive cartons from the combining table **43** or from the by-pass section **26**, since it is necessary that each of these two components deliver cartons to the discharge conveyor **28** through the diverter **27**.

Summarizing the operation of the box facial tissue fabrication line illustrated in FIG. 1, tissue webs are withdrawn from the parent rolls thereof provided at the back stand **20**, and after being folded and stacked one upon another define an elongated log which is severed transversely into sections of carton length, each of which sections is then packaged into a carton therefor. The filled cartons are advanced in side-by-side succession toward the tote box loader **25** which is operative to place a predetermined number of cartons in each tote box **32**. The loaded tote boxes are advanced one-by-one to the pickup station **34** from which they are deposited by the storage bank loader **35** into the storage bank **37** in the color section thereof corresponding to the color of the tissue.

When cartons having all of the necessary tissue colors are available in the storage tank **37**, the storage bank loader **35** withdraws tote boxes from the storage bank and deposits each box at the appropriate tote box unloader **40** which is operative to unload the tote box and deposit the cartons therefrom on the associated infeed conveyor **39**. Thereafter the empty tote boxes are returned to the tote box loader **25** and the cartons of tissue are fed into the color selector **38** which selects and segregates the requisite number of cartons of each tissue color and combines the segregated cartons into two parallel rows, which rows are then advanced by the discharge conveyor **28** into the case packer **29**. Should it be desired to bypass the tote box loader **25**, storage bank **37**, tote box unloaders **40** and selector **38**, the cartons **24** leaving the cartoning machine **22** are directed into the by-pass section **26** which delivers such cartons directly to the discharge conveyor **28** through the diverter **27**; and in this event, each case will contain cartons of one tissue color only.

TOTE BOX LOADER

In initiating discussion of the tote box loader **25** and by-pass conveyor section **26** therefor, reference will be made in particular to FIG. 2 which diagrammatically illustrates the various functions of the tote box loader. As shown in this figure and as described heretofore, cartons **24** of facial tissue are advanced in side-by-side juxtaposition along the carton infeed conveyor **23**, and adjacent the terminal end of such infeed conveyor is a two-position stop mechanism generally denoted **44** which in the active abutment position thereof illustrated, is engaged by advancing cartons and thereby terminates further movement thereof along the conveyor. After a predetermined number of cartons **24** have accumulated along the conveyor **23** rearwardly of the stop mechanism **44**, an interrupter mechanism **45** located intermediate the tote box loader **25** and by-pass conveyor section **26** moves into gripping engagement with one or more cartons **24** in alignment therewith to prevent further movement thereof along the conveyor **23** toward the stop mechanism **44**. Thereafter, a row-displacing pusher mechanism **46** is actuated to engage the cartons **24** then positioned between the stop mechanism **44** and interrupter mechanism **45** (which group of cartons constitute a row **47** thereof totaling 14 in the diagrammatic illustration of FIG. 2) to displace such row from the conveyor **23** and onto a stationary platform **48**.

Following such displacement of a row **47** of cartons onto the platform **48**, the interrupter mechanism **45** is deactuated to enable the conveyor **23** to further advance cartons **24** positioned therealong toward the stop mechanism **44** and into abutment therewith. Thereafter, the interrupter mechanism **45** is again actuated to grip the cartons then in alignment therewith and the pusher mechanism **46** is again energized to displace a subsequent row **47** of cartons onto the platform **48**. Evidently, such displacement of a subsequent row **47** will cause the prior row (or rows) then on the platform **48** to be pushed forwardly therealong, and in the illustration of FIGURE 2, six individual rows or groups **47** are located on the platform **48** and, for purposes of identification, are denoted with the numerals **47***a* through **47***f*. Such six rows or groups **47** supported upon the platform **48** together define a layer **49** of cartons, which layer in its entirety is advanced from the platform **48** and into a tote box **32** by operation of a layer-displacing conveyor mechanism **50**.

In the tote box loader **25** diagrammatically shown in FIG. 2, the layer **49** comprises eighty-four individual cartons **24** (i.e., 14 times 6) arranged in the aforementioned transversely extending rows **47** each of which is defined by a group of fourteen cartons. Each tote box **32** is adapted to receive a plurality of layers **49**, and the tote box **32** shown as in the process of being loaded, has four such layers supported upon the movable bottom **51** thereof—such individual layers being denoted with the numerals **49***a* through **49***d*. For convenience of description, the tote box presently being loaded in the illustration of FIG. 2 may be considered to be located at a loading station or loading position generally indicated at **52**, and after such tote box has been completely loaded, it is advanced from the station **52** along the path depicted by the directional arrow included as part of the FIG. 2 illustration. Such advancement of a loaded tote box is effected by the conveyor **33** which at the same time advances another tote box **32** into the loading station **52**. Thereafter, an additional tote box is advanced into place along the conveyor **33** beneath the platform **48** so as to be ready for advancement into the loading station **52** during the next cycle of operation.

As concerns the by-pass conveyor section **26**, it is employed whenever it is desired to bypass the tote box loader **25** and deliver cartons of tissue directly to the case packer **29**. In many respects the by-pass conveyor section is quite similar to the tote box loader **25**, and it includes a two-position stop mechanism **53** (not shown in FIG. 2, but see FIG. 3) selectively movable into an active abutment position to perform with reference to the by-pass conveyor the same function as the stop mechanism **44** with reference to the tote box loader **25**. Similarly, an interrupter mechanism **54** operates in a manner analogous to that of the interrupter mechanism **45** to terminate intermittently the advancement of cartons **24** along the infeed conveyor **23** when the by-pass section **26** is being used. In further similitude with the tote box loader **25**, a row displacing pusher mechanism **55** is associated with the by-pass conveyor section **26**, and the mechanism **55** is cyclically operable to displace successive rows or groups of cartons from intermediate the stop mechanism **53** and interrupter mechanism **54** onto the by-pass conveyor **26** which delivers the cartons row-by-row (not layer-by-layer) to the discharge conveyor **28**.

The tote box conveyor **33** will now be described with particular reference being made to FIGS. 3, 4 and 5, and considering the same it is seen that the tote box conveyor **33** comprises a pair of endless chains **56** and **57** which are spaced apart transversely so as to engage a tote box **32** supported thereon along the outer edges thereof, as seen best in FIG. 3. The chain **56** is entrained about a pair of longitudinally spaced sprockets **58** and **59** and correspondingly, the chain **57** is entrained about spaced-apart sprockets one of which is illustrated in FIG. 3 and is denoted with the numeral **60**. the sprockets **58** and **60** are mounted upon a common shaft **61** journalled adjacent its opposite ends in bearings **62** and **63** which are respectively supported by frame components **64** and **65** adapted to stand upon a suitable floor or other support surface. The upwardly extending frame components **64**

and 65 are rigidified by one or more horizontally disposed frame elements 66 and, quite evidently, because of the relatively great weights of the tote boxes 32 and quantities of facial tissue cartons carried thereby, the frame components of the apparatus must be substantial and a considerable number both of vertically disposed and of horizontally oriented frame components will be employed in the overall frame structure. In that such frame structure and the components thereof may be essentially conventional in form and function, no specific description thereof will be made.

As shown best in FIG. 8, the sprocket 59 (and its counterpart, not shown) is mounted upon a drive shaft 61' journalled adjacent its opposite ends in bearings supported by frame components of the apparatus, one such bearing being illustrated in FIG. 8 and denoted 62'. The drive shaft 61' extends outwardly from the adjacent frame components and is equipped exteriorly thereof with a sprocket 67 chain driven from a motor or other prime mover indicated by the drive sprocket 67'.

Located along the conveyor chain 56 are a plurality of guides in the form of longitudinally spaced rollers 68 which perform two functions. First, the rollers 68 serve as stops to limit movement of each tote box 32 from the return conveyor 41 into position beneath the platform 48, and second, to guide each tote box 32 as it is moved by the tote box conveyor 33 from a position beneath the platform 48 into the loading station 52. In an analogous manner, a plurality of guides in the form of rollers 69 are located adjacent the drive shaft 61 so as to guide each tote box 32 as it is moved from the conveyor 41 and into position beneath the platform 48.

Certain associated sections of the return conveyor 41 (FIG. 1) and tote box conveyor 33 are in the form of transveyors which enable the direction of movement of the tote boxes 32 to be changed by 90° at certain locations along such conveyors. Transveyors of the type used herein are commercially available and are well known in the art and need not be described in detail. Accordingly, it will only be noted herein, as is illustrated in FIG. 3, that such conveyors necessarily have sections which are substantialy normal to each other and that at each location of interconnection, one of the conveyor sections is vertically displaceable to make it dominant at certain times in control of the article moving therealong, and to make it passive at certain other times so that the coactive conveyor section then has control of such article. In this reference, the return conveyor 41 at its location of intersection with the tote box conveyor 33 is the vertically movable conveyor section and it comprises a plurality of narrow rollers 70 mounted upon elongated supports 71 which in turn are carried by the movable piston components of a plurality of spaced-apart piston-cylinder members 72 operative to displace the supports 71 and rollers 70 carried thereby between the upper and lower positions illustrated in FIG. 3 in which the rollers 70 are effective and ineffective, respectively, to control the direction of movement of each tote box supported thereabove.

The loading station 52 is defined in part by releasable stop structure operative to limit forward movement along the conveyor structure 33 of each tote box 32 and thereby positively locate each tote box within such loading station 52. The releasable stop structure is shown in FIGS. 5 and 8 and is denoted in its entirety with the numeral 73. The stop 73 includes a roller 74 rotatably carried adjacent one end of a generally T-shaped lever 75 pivotally mounted adjacent another end thereof by a pin 76. The pin is supported by a stationary frame component 77, and an adjustable stop screw 78 permits selection of the precise limit of angular movement of the lever 75 in a clockwise direction about the axis of the pin 76. The lever 75 is resiliently biased toward its limiting inward position in a clockwise direction (shown in full lines in FIG. 8) by a compression spring 79 which at one end bears against the lever 75 and at its other end bears against a fixed frame component 80. The spring 79 is a helical structure located coaxially circumjacent a pin or plunger 81 which adjacent one end is pivotally support by the frame component 80 and thereby accommodates pivotal displacement of the lever 75 while positively relating the spring 79 with respect thereto.

The T-shaped lever 75 is selectively displaceable in a counterclockwise direction about the axis of the pin 76 to withdraw the roller 74 from its inner position of abutment with a tote box 32 to an outer position remote therefrom, illustrated by broken lines in FIG. 8, by a motor means 82 in the form of piston-cylinder structure, the cylinder element of which is fixedly connected to the frame component 80 and the moveable piston element of which is connected to the T-shaped lever 75. Evidently, when the motor means 82 is energized, the piston and rod thereof are displaced in a direction causing counterclockwise movement of the lever 75 about the axis of the pivot pin 76 therefor to move the roller 74 into its retracted position against the biasing force of the spring 79.

Each tote box 32 is displaced along the return conveyor 41 and onto the conveyor 33 at a location beneath the platform 48 thereof by reciprocable displacement mechanism 83 comprising an elongated cylinder 84 fixedly supported by appropriate frame components of the tote box loader 25. The mechanism 83 further includes a reciprocable piston equipped with a rod or plunger 85 which has affixed thereto a finger 86 adapted to engage an edge portion of a tote box 32 and thereby enforce movement thereon when the piston rod is displaced toward its innermost position.

More particularly in this respect, when a tote box 32 is moved by the return conveyor 41 into a position of alignment with the platform 48 so that it may be displaced thereunder, as shown in FIGS. 2 and 7, the plunger 85 of the cylinder 84 is in the outermost position thereof shown by broken lines in FIG. 7, wherefore movement of a tote box 32 into such position of alignment orients the same for engagement by the finger 86. Thereafter, energization of the cylinder 84 to displace the rod or plunger 85 toward the right, as viewed in FIG. 7, causes the tote box 32 then in alignment with the finger 86 to be displaced along the return conveyor 41 and into position beneath the platform 48. It will be appreciated that during such displacement the aforementioned piston-cylinder members 72 will have been energized to elevate the rollers 70 of the return conveyor 41 into the uppermost position thereof in which the return conveyor controls movement of the tote box.

As explained hereinbefore, each tote box 32 is provided with a movable bottom 51 adapted to receive thereon a plurality of cartons 24. The purpose of such movable bottom 51 is to enable the tote box to be loaded layer-by-layer while maintaining the cartons 24 in a precise predetermined orientation relative to each other. In an analogous manner, the movable bottom 51 enables each tote box to be unloaded layer-by-layer without disturbing the predetermined orientation of the cartons 24. In this connection, the bottom 51 is shingled or has a stepped configuration which facilitates loading and unloading of the tote box by preventing misalignment or improper positioning of one or more cartons 24, which improper positioning might interfere with such layer-by-layer processing thereof. A complete and explicit explanation of such features and characteristics of the tote box are set forth in copending patent application Ser. No. 633,088 filed April 24, 1967, now Pat. No. 3,421,655, and insofar as such details may find application herein, they are incorporated by such reference to this copending patent application.

Referring to FIG. 5, it will be seen that the movable bottom 51 of the tote box 32 there illustrated is in an intermediate position and has four layers of cartons 24 supported thereon. Such four layers are respectively de-

noted with the numerals **49***a*, **49***b*, **49***c* and **49***d*, and each such layer comprises six transversely extending rows or groups **47** of cartons, the corresponding groups in such layers **49** being vertically juxtaposed in substantial alignment as evidenced by the numerically designated rows **49***f* respectively comprised by the layers **49***a* through **49***d*. Evidently, the movable bottom **51** is freely displaceable within the tote box **32**, and the bottom in its lowermost position is supported perimetrically by inwardly projecting support edges provided by the tote box. Displacement of the bottom **51** through various vertical locations above such lowermost position are enforced thereon by a jack assembly **87** which is illustrated most clearly in FIG. 5.

The jack **87** is essentially a scissors type jack having pivotally interconnected levers **88** and **89** each of which comprises two separate arms or branches in the particular structure shown. At its upper and lower ends, the lever **88** is pivotally connected, respectively, to a movable floor or platform **51***a* through a depending ear **90** and to the frame of the tote box loader through an upwardly extending ear **91**. Although supported for pivotal movement adjacent its opposite ends, the lever **88** at such ends is fixed against translational displacements with respect both to the floor **51***a* and to the frame of the tote box loader.

The lever **89** at its upper end is pivotally connected to the floor or platform **51***a* through a slot-equipped depending bracket **92** which permits limited translational displacements of such end portion of the lever relative to the floor **51***a* within the limits defined by such slot. In a similar manner, the lower end of the lever **89** is pivotally connected to a frame component of the tote box loader through a slot-equipped guide or bracket **93** which permits limited translational displacement of such end portion of the lever relative to such frame. The translational displacements afforded for the end portions of the lever **89** evidently accommodate movement of the bottom **51** (i.e., floor or platform **51***a* which supports the bottom thereon) from the extreme lowermost position thereof (see FIG. 16), through the intermediate position shown in FIG. 5, and into an uppermost position, generally shown in FIG. 4, in which the upper surface thereof is located in substantial alignment with the platform **48**.

Such movement of the floor or platform **51***a* is enforced thereon by a motor means **94** in the form of a fluid actuated piston-cylinder structure, the cylinder element of which is supported by a frame component of the tote box loader through a pivot pin **95** permitting angular displacement with respect thereto. The reciprocable piston of the motor means **94** is equipped with a rod or plunger **96** pivotally connected by a pin **97** to the upper branch or arm of the lever **89**. Quite evidently, when the motor means **94** is energized to displace the piston rod **96** outwardly, the bottom **51** will be moved upwardly within the tote box **32**, and reverse actuation of the motor means to displace the rod **96** inwardly will cause the bottom **51** to descend. As indicated hereinbefore, the movement of the bottom **51** is a step function related to the layer-by-layer loading and unloading of the tote box.

The infeed conveyor **23** will now be described with particular reference being made to FIGS. 2, 3, 6, 9, 10 and 12 through 15. The conveyor **23** includes an endless belt **98** entrained at opposite ends thereof about suitable drums, one of which is shown in the drawings (FIG. 3), and is denoted with the numeral **99**. The drum **99** extends between and is rotatably supported by a pair of spaced-apart channels **100** and **101** fixedly supported by the frame of the apparatus. As shown in FIG. 3, the drum **99** is driven by a pulley or sprocket **102** having a belt or chain **103** drivingly engaging the same, which chain **103** is in turn driven by a suitable motor or other prime mover, not shown. As illustrated in FIG. 6, the endless belt **98** is located intermediate the ends of the drum **99** and is sufficiently narrow that a pair of stationary rails **104** and **105** respectively extend along the opposite longitudinal edges of the belt and tend to support each carton **24** as it is advanced thereby.

The aforementioned stop mechanism **44** is disposed adjacent the outer terminal end of the infeed conveyor **23** and, as shown best in FIGS. 12 through 15, includes an abutment plate **106** extending transversely of the infeed conveyor **23** and adapted to be engaged by the forwardmost carton **24** in a group or row thereof advancing along the conveyor. Accordingly, the abutment plate **106** defines the extreme limit of movement of cartons **24** along the conveyor **23** whenever the plate is in the carton-engaging position thereof. The abutment plate **106** is carried by a depending bar or bracket **107** which, at its upper end, is equipped with an annular hub or collar **108** supported for pivotal movements about the axis of a pin **109** between the active position illustrated in FIG. 14 in which the abutment plate **106** is in the lower carton-engaging position thereof, and the retracted position illustrated in FIG. 15 in which the abutment plate **106** is in an elevated position in which it is ineffective to engage cartons **24** advancing along the conveyor **23**.

The abutment plate **106**, bracket **107** and hub **108** are resiliently biased for angular movement in a counterclockwise direction, as viewed in FIG. 14, toward the retracted position of the abutment plate, shown in FIG. 15, by a helical spring **110** which at its lower end is secured to an ear **111** affixed to the bracket **107** and at its upper end is anchored to a hanger **112** affixed to a stationary frame member **113**. The abutment plate **106**, bracket **107** and hub **108** are ordinarily retained in the carton-engaging position, shown in FIG. 14, against the biasing force of the spring **110** by a latch **114** pivotally supported intermediate the ends thereof and adapted at one end to engage the upper edge of the bracket **107**. The latch **114** is resiliently biased into its bracket-engaging position, illustrated in FIG. 14, by a helical spring **115** which at one end is connected to the latch and its upper end is affixed to the hanger **112**.

The latch **114** is selectively movable into the release position thereof, shown in FIG. 15, against the biasing force of the spring **115** by action of a solenoid **116** supported by the frame member **113** and having a movable plunger pivotally connected to the latch **114** through a link **117**. So long as the solenoid **116** is de-energized, the abutment plate **106** can be maintained in the carbon-engaging position thereof, shown in FIG. 14, by the latch **114** through the biasing force imparted thereto by the spring **115**. However, energization of the solenoid **116** elevates the latch **114** to release the bracket **107**, whereupon it is swung upwardly as a consequence of the biasing force imparted thereto by the spring **110**. Resetting of the stop mechanism in the carton-engaging position thereof is a manual operation accomplished by simply swinging the abutment plate **106** and bracket **107** downwardly (an outwardly extending hand grip **118** being provided for this purpose) into the position shown in FIG. 14 whenever the solenoid **116** is de-energized.

It may be noted that in the usual case the abutment plate **106** is moved into the retracted position thereof, shown in FIG. 15, only upon malfunctioning of the tote box loader **25**, by-pass conveyor section **26**, or equipment following thereafter so as to permit the back stand **20** and cartoning machine **22** to continue to operate by providing a path of discharge for the cartons emanating therefrom. A push-button limit switch **119** located so as to be actuated by movement of the abutment plate **106** into the retracted position thereof (compare FIGS. 14 and 15) is included in the apparatus and it may be used in association with an indicia device to provide an indication of such positioning of the abutment plate in its elevated position.

Associated with the stop mechanism **44** is control apparatus which includes an actuator **120** carried by a hanger **121** supported by a collar **122** circumjacent the aforementioned pin **109** for pivotal displacements with

respect thereto. Also carried by the collar **122** is a cam-type switch actuator **123** that is cooperatively engaged by the cam follower **124** of a switch arm **125** operative to control the condition of a limit switch **126**. In this respect, the hanger **121** and actuator **120** are gravity biased into the downward position, shown by full lines in FIG. 12, in which a portion of the actuator **120** extends rearwardly of (to the left, as viewed in FIG. 12) the abutment plate **106** so as to be engaged by a carton moving theretoward slightly before such carton engages the abutment plate. Such condition of initial engagement of the actuator **120** by a carton **24** is illustrated in FIG. 12, and following such engagement, the actuator **120** is displaced in a counterclockwise direction, as viewed in this figure, about the axis of the pin **109**. Such counterclockwise angular displacement results in the cam **123** displacing the arm **125** of the switch **126** to trip the same, thereby commencing a cycle of operation in which a group or row of cartons disposed along the conveyor **23** are displaced by the pusher mechanism **46** onto the platform **48**.

As a part of such cycle of operation, the entire structural assemblage comprising the stop mechanism **44** is angularly displaced in a counterclockwise direction, as viewed in FIGS. 12 and 14, from the normal inner position thereof shown by broken lines in FIG. 14 into its outer position illustrated by full lines in such figures so as to relieve the row of cartons **24** in engagement with the abutment plate **106** from compression by allowing the row to move through a limited distance forwardly or toward the right along the conveyor **23**, which displacement of the cartons and slight relief of compression facilitate displacement thereof from the conveyor **23** and onto the platform **48**. Evidently, the structural assembly comprising the stop mechanism **44** is supported for such pivotal displacements by and with respect to the pin **109**, and in its entirety it is biased in a counterclockwise direction by a helical spring **127** affixed at its upper end to a stationary bracket **128** and at its lower end to a bracket **129** forming a part of such mechanism **44**. The extent of the angular displacement of the stop mechanism **44** in a counterclockwise direction is determined by an adjustable stop pin or screw **130**.

The structural assemblage comprising the stop mechanism **44** is angularly displaced in a counterclockwise direction against the biasing force of the spring **127** to cause the abutment plate **106** to relieve a row of cartons of compression by action of a push rod **131** which at its lower end is pivotally connected to a crank arm **132** equipped at its inner end with a collar **133** supported by the pin **109** for pivotal displacements with respect thereto. Evidently, the stop mechanism **44** is carried by such collar **133** which then affords the aforementioned permissible pivotal displacements thereof relative to the pin **109**.

As shown in FIG. 3, the push rod **131** at its upper end is pivotally connected to one arm of a bell crank **134** supported intermediate the ends thereof by a collar **135** for angular movement about a shaft **136**. The other arm of such bell crank **134** is provided with a cam follower **137** that ridingly engages a cam **138** mounted upon a main drive shaft **139**. Upon rotation of the shaft **139**. the cam **138** is rotated and, as a consequence thereof, the push rod **131** is displaced upwardly to cause the crank arm **132**, bracket **107** and abutment plate **106** to be rotated in a clockwise direction into the position shown by broken lines in FIGURE 14 against the resilient biasing force of the spring **127**.

The row-displacing pusher mechanism **46** will now be described with particular reference being made to FIGS. 2, 3, 4 and 6. The mechanism **46** is cyclically operable to displace successive rows **47** of cartons from the endless belt **98** of the infeed conveyor **23** onto the stationary platform **48**; and it includes an elongated pusher bar **140** that extends longitudinally along the conveyor **23** and is of sufficient length to engage each carton defining a row **47** thereof so as to positively displace the same from the conveyor belt **98** and onto the platform **48**. The pusher bar **140** is carried at spaced-apart locations therealong by a pair of arms **141** and **142** which are respectively connected to the bar through brackets or fasteners **143** and **144**. Adjacent their upper ends, the arms **141** and **142** are clamped or otherwise secured to a shaft **145** which adjacent its opposite ends is journalled for rotation in bearing structures respectively provided by crank arms **146** and **147** clamped or otherwise fixedly secured to the aforementioned shaft **136** so as to be angularly displaced therewith.

The shaft **136** adjacent the crank arm **147** has a cam follower arm **148** secured thereto, which cam follower arm may be formed integrally with the crank arm **147** and defines a bell crank therewith. Adjacent its outer end, the arm **148** is equipped with a rotatable cam follower **149** adapted to ridingly engage a cam **150** configured so as to displace the cam follower **149** between the inner and outer positions thereof shown in FIG. 6, such outer position being depicted in phantom by broken line. The cam **150** is mounted upon the aforementioned main drive shaft **139** so as to rotate therewith.

The pusher mechanism **46** further includes a push rod **151** pivotally secured at one end thereof to the arm **141** and at its other to the lower end of a crank arm **152** which adjacent its upper end is clamped to a shaft **153** supported adjacent its opposite ends by frame components of the apparatus in suitable journals that permit angular displacements of the shaft. Intermediate its ends, the arm **152** is equipped with a rotatable cam follower **154** that ridingly engages a cam **155** configurated to displace the cam follower **154** between the inner and outer positions thereof depicted in FIG. 6. The cam **155** is mounted upon the aforementioned main drive shaft **139** so as to rotate therewith.

Evidently, rotation of the shaft **139** causes the cams **150** and **155** to rotate therewith, and rotation of the cam **155** results in the push rod **151** reciprocating the arms **141** and **142** and pusher bar **140** carried thereby from their outermost position, shown in full lines in FIG. 6, adjacent the outer lateral extremity of the infeed conveyor **23** to an inner position, indicated by broken lines in FIG. 6, in which the pusher bar **140** has been moved inwardly completely across the conveyor **23** to a position above the edge portion of the stationary platform **48**. Continued rotation of the cam **155** returns the push bar **140** to its starting position. Thus, in one complete 360° rotation of the shaft **139** and cam **155** carried thereby, the pusher bar **140** is swung inwardly to displace a row **47** of cartons from the infeed conveyor **23** and onto the stationary platform **48** and is then returned to its starting position in preparation for another displacement cycle.

Concurrently therewith, simultaneous rotation of the cam **150** causes the entire pusher mechanism **46** to be displaced angularly with respect to the axis of the shaft **136** which causes the pusher bar **140** to traverse different, vertically-separated paths of travel as between the inward and outward displacements thereof. More particularly in this respect, just prior to the commencement of a cycle of operation, the pusher mechanism **46** is in the position thereof illustrated by full lines in FIG. 6, and upon initiation of such cycle, the pusher bar **140** begins to move inwardly toward engagement with the cartons defining a row **47** thereof along the infeed conveyor **23** because of the coaction of the cam **155**, cam follower **154**, and associated components as heretofore explained.

At the same time, coaction of the cam **150**, cam follower **149**, and associated components, as heretofore explained, causes the pusher bar **140** to move downwardly into the position denoted **140'** in FIG. 6 at which position thereof the pusher bar is located at an elevation substantially along the center line of the cartons **24**. The pusher bar is thereafter maintained at such eleva-

tion until it reaches its innermost position above the stationary platform **48**, at which time the cam **150** causes the pusher bar to move upwardly to an elevation at which it clears any cartons **24** then disposed along the infeed conveyor to permit the pusher bar to be returned to the starting position thereof. Such arcuate path of travel traversed by the pusher bar enables the infeed conveyor **23** to commence advancing a subsequent row **47** of cartons toward the stop mechanism **44** without having to wait until the pusher bar **140** has been returned to its starting position, thereby increasing the productive capacity of the apparatus.

In order for the row-displacing pusher machanism **46** to advance a row **47** of cartons from the conveyor **23** and onto the stationary platform **48**, a minimum of interference should be presented by the successive cartons **24** being advanced along the infeed conveyor. Minimization of interference is provided in the present apparatus by interrupting advancement of cartons along the infeed conveyor during the brief interval that a row **47** of cartons is being displaced from the infeed conveyor. Such interruption is provided by the aforementioned interrupter mechanism **45** which will now be described in detail with particular reference being made to FIGS. 3, 6, 9 and 10.

The interrupter mechanism **45** comprises a pair of spaced-apart carton-gripper plate structures **156** and **157** each of which, as shown best in FIGURE 10, comprises a plurality of separate plate sections or segments, there being three in number in the structure shown and for purposes of identification such sections are respectively designated in FIG. 10 with the numerals **156***a*, **156***b* and **156***c*. The various sections comprising each of the plate structures **156** and **157** are resiliently supported by carrier plates **158** and **159** through a plurality of helical spring and plunger devices, collectively denoted with the numeral **160**, operative to urge the plate structures **156** and **157** toward each other for engagement with any cartons **24** disposed therebetween, as shown in FIG. 6 (the number of cartons so engaged depending upon the length of the plate structures, and totalling three in the particular apparatus illustrated). As will be explained hereinafter, the springs impart a yieldable biasing force to the plate structures enabling them to grip tightly a carton **24** disposed therebetween without crushing or otherwise damaging such carton, which damage might result should the magnitude of the force imparted to the plates **156** and **157** through the carriers **158** and **159** be excessive.

The carrier plates **158** and **159** are selectively movable between an outer position illustrated in FIG. 9 in which the gripper plate structures **156** and **157** are remote from a carton **24** disposed therebetween, and an inner position shown in FIG. 6 in which such gripper plates are in engagement with a carton to prevent further movement thereof along the infeed conveyor **23**. In order to accomplish such swinging movement of the carrier plates, they are respectively carried by depending arms **161** and **162** respectively supported by stub shafts **163** and **164** for pivotal displacements with respect thereto. The stub shafts are fixedly mounted upon one or more frame components of the apparatus, such as the transverse frame component **165** illustrated most clearly in FIGS. 6 and 9.

Respectively secured to the stub shafts **163** and **164** are a pair of crank arms **166** and **167** in a manner preventing relative rotation therebetween, and such crank arms extend inwardly from the shafts and adjacent their inner end portions are pivotally secured by a pin **168** to the bifurcated end portion **169** of a vertically oriented push rod **170**. Adjacent its upper end, the push rod **170** is pivotally connected to one end of a crank arm **171** which at its opposite end is pivotally supported by the aforementioned shaft **136**, and together with a depending arm section **172** (FIG. 3) forms a bell crank equipped with a cam follower **173** that rides upon a cam **174** rotatably driven by the shaft **139**. Evidently, rotation of such shaft **139** upon initiation of a cycle of operation causes the arm **171** and push rod **170** to be displaced upwardly with the result that the upward movement thereby enforced on the inner end portions of the arms **166** and **167** causes the carrier plates **158** and **159** to swing inwardly to bring the gripper plate structures **156** and **157** respectively carried thereby into carton-interrupting engagement with a carton **24** positioned therebetween.

Thereafter, as explained heretofore, inward movement of the pusher bar **140** is effective to displace a row **47** of cartons from the infeed conveyor **23** without excessive frictional interference from the next successive carton positioned along the infeed conveyor. As soon as the pusher bar **140** has cleared the infeed conveyor as it moves inwardly, the cam **174** will have been rotated into a position in which the push rod **170** will be moving downwardly to effect release of the carton **24** clamped between the plate structures **156** and **157**, thereby enabling such carton and those following the same to be advanced by the conveyor **23**. It will be apparent that the infeed conveyor **23** may run continuously, and the endless belt thereof simply slides beneath the cartons **24** constrained against movement therewith by action of the interrupter mechanism **45**.

As shown best in FIG. 4, the cam follower **154** is resiliently maintained in engagement with the cam **155** associated therewith through a helical spring **175** which at one end is affixed to the frame of the apparatus and at its other end is affixed to an arm **176** that is clamped to the shaft **153**, the spring thereby causing the arm **176** and shaft **153** to be biased in a clockwise direction, as viewed in FIGS. 4 and 6. In a similar manner, the cam follower **149** is urged into engagement with the cam **150** associated therewith by a helical spring **177** which at one end is affixed to the frame of the apparatus and at its other end is affixed to an arm **178** that is clamped to the shaft **136**, the spring thereby biasing the arm **178** and shaft **136** in a counterclockwise direction, as viewed in FIGS. 4 and 6.

The main drive shaft **139** for the cams is driven through a drive train that includes a motor **179**, gear reducer **180** to which it is connected by a drive belt **181** entrained about appropriate sheaves respectively carried by the motor and gear reducer, and a drive sprocket **182** mounted upon the shaft **139** and about which is entrained an endless chain **183** that is also entrained about a sprocket provided by the gear reducer **180**. The motor **179** is operative to cycle the shaft **139** through one complete 360° rotation, and following any such complete revolution of the shaft, angular movement thereof terminates pending initiation of the next successive cycle of operation. Evidently, then, various control and limit switches are incorporated in the apparatus to effect such intermittently, cyclically repetitive operation of the shaft. In this reference, a one-revolution clutch can be employed as the connector between the motor **179** and gear reducer **180** in those instances where a continuously operative motor is used, although in other environments an intermittently operative motor may be employed.

As indicated hereinbefore, successive rows **47** of cartons are advanced one-by-one onto the stationary platform **48**, and after a predetermined number of rows have been advanced thereonto, the entire layer **49** defined by such plurality of rows **47** is displaced in its entirety into a tote box **32** for support either directly by the movable bottom **51** thereof or indirectly thereby through a prior layer **49**. The layer-displacing conveyor mechanism **50** by means of which such layer-by-layer loading of a tote box **32** is accomplished will now be described, and for this purpose reference will be made to FIGS. 1, 3 through 6 in particular.

The mechanism **50** includes a pair of endless chains **184** and **185** respectively entrained about sprockets **186**, **187** and **188**, **189**. The chains **184** and **185** are driven

in enforced synchronism, and in this reference the sprockets **186** and **188** are mounted upon an idler shaft **190** located adjacent the infeed conveyor **23**, and the sprockets **187** and **189** are mounted upon a drive shaft **191**. The shaft **191** is driven through a drive train including a motor **192**, gear reducer **193**, and a drive chain **194** entrained at opposite ends about sprockets, one of which is connected with the gear reducer **193** and the other of which is mounted upon the shaft **191**. The motor **192** is energized intermittently through control circuitry therefor including a switch **195** having a relatively long actuator arm **196** that extends over the stationary platform **48** and is adapted to be engaged and pushed upwardly by a carton **24** advanced therealong, as shown in FIG. 4. The actuator arm **196** is located with respect to the platform **48** so that the switch **195** is actuated whenever the final row **47** of cartons forming a layer **49** thereof is displaced onto the platform **48**. Upon removal of such entire layer **49** from the platform **48**, the actuator arm **196** returns downwardly to its lowermost position to signal the termination of a cycle of operation for the motor **192**.

A layer **49** of cartons is removed from the platform **48** upon energization of the motor **192** by one or the other of a pair of conveyor flights or pushers **197** and **198** that extend transversely between the chains **184** and **185** and are fixedly secured thereto, as shown best in FIG. 6. The pusher flights **197** and **198** are equally spaced along the chains **184** and **185** and alternately engage the cartons defining the final row **47** forming successive layers **49** thereof. For the purpose of such engagement, each pusher flight has an L-shaped configuration and is adapted to engage the upper trailing corner portion of such final row **47**, as shown in FIG. 4 by the pusher flight **198**.

The conveyor mechanism **50** terminates its cycle of operation at about the relative disposition of the pusher flights **197** and **198** shown in FIG. 4, and in such position, the layer of cartons displaced by the conveyor mechanism during its cycle of operation from the platform **48** is located generally within the dimensional confines of a tote box **32** as such dimensions are projected upwardly from the upper edges of a tote box disposed in the loading station **52**. As shown in FIG. 4, such displacement of a layer **49** into position above the tote box **32** causes a height-sensing switch **199** to be actuated because of the upward displacement of the actuator arm **200** thereof by engagement with cartons comprised in such layer **49**. Actuation of the switch **199** causes the jack assembly **87** to index the bottom **51** of the box **32** downwardly one step.

Prior thereto, however, the direction of movement of the conveyor mechanism **50** is reversed and the conveyor travels reversely through a slight distance to withdraw the pusher **198** from the cartons displaced thereby, which reverse movement actuates a switch (not shown), and control circuitry associated therewith causes energization of a motor means **201** in the form of piston-cylinder structure, the cylinder of which is pivotally connected with frame components of the apparatus through mounting bracket structure generally denoted with the number **202**. The reciprocable piston of such motor means is equipped with a rod **203** pivotally coupled to a confining or positioning displacer **204** in the form of an elongated plate that extends transversely with respect to the conveyor mechanism **50** and is adapted to engage each carton in the forwardmost row defining a layer thereof being advanced by the conveyor mechanism **50** into position above the tote box **32**.

When the motor means **201** is energized, the rod **203** tends to be displaced toward the left, as viewed in FIG. 5, which causes the confining displacer **204** to be moved toward the left and into engagement with the cartons adjacent or immediately facing the same. Such engagement tends to move the row of cartons, and those rearwardly thereof, to the left to bring the lower trailing corner portion of each such carton into tight abutment with the upper forward corner portion of the carton therebelow (or step of the movable bottom **51** in the case of the first layer **49***a*). The purpose of such reverse displacement of a layer or cartons is to assure proper vertical disposition thereof with respect to the underlying rows of cartons.

At about the time that the confining displacer **204** has completed its reverse displacement of the layer of cartons, a vertically movable presser mechanism, generally denoted **205**, is energized. Such mechanism **205** includes a plurality of depending presser feet **206** mounted upon carrier structure **207** supported for vertical displacements. Each of the presser feet extends transversely in the manner of the confining displacer **204**, and such feet are respectively aligned with the various rows **47** of cartons supported by the movable bottom **51** of a tote box **32** located at the loading station **52**. The carrier structure **207** is supported by a plurality of upwardly extending posts, there two shown in FIG. 5 which are respectively denoted with the numerals **208** and **209**.

The posts are pivotally connected at their lower ends to the carrier structure **207**, and at their upper ends the post **208** is pivotally connected to one free end of a bell crank **210** and, similarly, the post **209** is pivotally connected to one free end of a bell crank **211**. The bell cranks **210** and **211** are respectively supported at the mergence of the legs thereof for angular displacements about shafts **212** and **213** fixedly related to frame structure of the apparatus. The other free ends of the bell cranks **210** and **211** are pivotally interconnected by a tie rod **214**, which interconnection thereof causes such bell cranks to move in enforced synchronism. The shaft **213** is equipped with a crank arm **215** which is pivotally connected to a rod **216** operatively coupled with a motor means **217** in the form of piston-cylinder structure, the cylinder of which is pivotally anchored to frame structure of the apparatus and the piston of which is connected with the rod **216**. One or more guides **218** confines the carrier structure **207** for vertical displacement.

Ordinarily the presser mechanism **205** is in the elevated position thereof shown in FIG. 5, but upon actuation of the switch **199**, as heretofore described, the motor means **217** is energized, whereupon the rod **216** is moved inwardly, or generally toward the left as viewed in FIG. 5. As a consequence of such displacement of the rod **216**, the shaft **213** is rotated in a counterclockwise direction with the result that the bell cranks **211** and **210** are similarly rotated, whereupon the carrier structure **207** is moved downwardly to bring the presser feet **206** into engagement with the cartons **24** in the underlying layer thereof to press the same downwardly into tight juxtaposition with the underlying layer of cartons **24** (or the movable bottom **51**, as the case may be). Thus, the cooperative action of the confining displacer **204** and presser mechanism **205** assures a positive and proper location of each of the cartons **24** with respect to the tote box **32** and movable bottom **51** thereof.

The movable bottom **51** of the tote box **32** necessarily moves downwardly step-by-step as each successive layer **49** of cartons is advanced into position thereabove, and each step-by-step indexing of the movable bottom is initiated upon actuation of the aforementioned switch **199** through suitable control circuitry associated therewith and operative to energize the motor means **94** as a step function. Thus, as each layer **49** of cartons is advanced by the conveyor mechanism **50** from the stationary platform **48** and into position above the bottom **51** of a tote box **32** for receipt therein, the aforementioned mechanisms **204** and **205** positively locate the cartons of each such layer and the motor means **94** lowers the bottom **51** to condition the same for receipt of the next successive layer. As shown in FIG. 5, downward movement of each layer of cartons is facilitated by guides

219 and 220 respectively located adjacent the end of the conveyor 50 and adjacent the confining displacer 204.

As concerns control over a cycle of operation, a plurality of limit switches are used in this connection and are located along the shaft 139 for actuation by a plurality of cams carried thereby. However, since control circuitry of the type used in the present apparatus involving both limit switches and cam actuated switches is essentially standard, the complete circuitry is not treated herein because it is not essential to an understanding and complete disclosure of the present invention, and because inclusion of such circuitry would unduly burden the present description. For illustrative purposes, however, two such switches and the cam actuators therefor are illustrated in FIG. 11, and for identification, the switches are denoted with the numerals 221 and 222, and the cam actuators therefor are designated 223 and 224. Such cams, it may be noted, are mounted upon the main 139 so as to rotate therewith and, therefore, actuate the switches in a particular time relationship referenced to the rotation or angular displacement of the shaft 139.

As explained heretofore, the by-pass conveyor section 26 as it relates to the infeed conveyor 23 is substantially similar to the tote box loader 25. Accordingly, it may be said that the stop mechanism 53 associated with the by-pass conveyor section 26 is analogous in mechanism and function to the stop mechanism 44 heretofore described in detail. Therefore, details of the stop mechanism 53 will not be repeated herein since to do so would simply be a duplication of the disclosure presented with respect to the stop mechanism 44. As a convenience in establishing the visual correspondence of component parts as between the two stop mechanisms, the primed form of the same numerals used to identify certain of the components in the stop mechanism 44 are used in FIG. 3 to identify the respectively corresponding components of the stop mechanism 53.

The same comments are applicable with respect to the interrupter mechanism 54 and the row-displacer pusher mechanism 55 which respectively correspond structurally and functionally to the aforedescribed interrupter mechanism 45 and row-displacer pusher mechanism 46 of the tote box loader 25. Accordingly, these mechanisms will not be again described and where appropriate, the primed form of the same numerals employed to identify component parts of the interrupter mechanism 45 and row-displacer pusher mechanism 46 are used in FIG. 3 to identify the respectively corresponding components of the interrupter mechanism 54 and row-displacer pusher mechanism 55. In the same sense other corresponding components are similarly designated including the motor 179', gear reducer 180', and shaft 139' driven thereby which respectively correspond to the motor 179, gear reducer 180, and shaft 139 heretofore described.

It will be apparent from the foregoing discussion that proper functioning of the tote box loader 25 and of the by-pass conveyor section 26 requires that the cartons 24 of tissue be properly oriented in a predetermined disposition as they are advanced along the infeed conveyor 23. That is to say, all of the cartons 24 are intended to have a contiguous juxtaposition in which each carton is resting upon a side wall thereof, and should a carton not have such orientation and, for example, be resting upon a top or bottom wall thereof (or in the unlikely event that it be resting upon an end), the apparatus could malfunction. To prevent this occurrence, a position-sensing mechanism is employed along the infeed conveyor 23 upstream of the by-pass conveyor section 26, and such mechanism is operative to detect the presence of and displace from the infeed conveyor any such misaligned carton.

In the present apparatus the position-sensing mechanism is electro-optical in character and includes a photosensitive cell, a light source and an ejector device responsive to a signal from such photosensitive cell to displace from the conveyor a misaligned carton sensed by the photosensitive cell. Such apparatus is indicated in FIG. 3 and is denoted generally with the numeral 225. As concerns its position-sensing characteristics, the mechanism is conventional and includes a light source oriented along one side of the infeed conveyor 23 to project a light beam thereacross, and a photosensitive cell positioned along the opposite side of the conveyor to intercept the light beam. The photosensitive cell responds to any change in the condition of incidence of the light beam thereon to energize the ejector device and thereby displace from the infeed conveyor any carton causing such change in the incidence of the light beam. In that the structural composition of the mechanism 225 may be conventional, the foregoing description thereof is clearly adequate.

TOTE BOX UNLOADER

As illustrated in FIG. 1 and as described heretofore, a plurality of tote box unloaders 40 are included in the box facial tissue fabrication line (one for each color being processed), and each such unloader in a sense performs the reverse function of the tote box loader 25 in that it removes cartons 24 of tissue layer-by-layer from the tote boxes 32, which cartons were placed therein layer-by-layer by the tote box loader 25. A tote box unloader will now be described in detail with particular reference being made to FIGS. 16 through 20, and although the specific tote box unloader illustrated in these figures is the unloader 40*e*, numerical identification of the unloader and components thereof as illustrated in FIGS. 16 through 20 will be made without the inclusion of a letter suffix since all of the unloaders are essentially identical.

The unloader 40 includes frame structure generally denoted 226 that is provided along the bottom thereof with an infeed conveyor 227 adapted to receive thereon a tote box 32 delivered thereto by the storage bank loader and unloader structure 35. The conveyor 227 is operative to advance each tote box 32 from left to right, as viewed in FIGURE 16, wherefore each tote box passes under the color selector infeed conveyor 39 associated with such unloader. Each full tote box 32 resides temporarily at a ready station generally denoted 228 in FIGURE 16 until there is a requirement for such tote box at an adjacent unloading station 229. Such requirement occurs when a tote box 32 at the unloading station 229 has been completely unloaded and then removed from such station (displacement from left to right, as viewed in FIG. 16) either for return to the tote box loader 25 via the return conveyor 41 or for delivery to the pickup station 34, all as heretofore explained.

The tote box conveyor 227 for the unloader 40 is structurally similar to the tote box conveyor 33 for the loader 25 heretofore described, and includes a plurality of endless chains 230 adapted to support tote boxes thereon and entrained adjacent their opposite ends about sprockets at least one set of which is positively driven by motor means (not shown) upon command from appropriate signal devices. In view of the general similarity of the conveyor structures 33 and 227, and also because of the essential conventionality thereof, further details of the conveyor 227 will not be recited.

Included at the unloading station 229 is a jack assembly 231 which is substantially the same in terms of structure and function as the jack assembly 87 heretofore described in connection with the tote box loader 25. Accordingly, the jack 231 includes a scissors type lever system 232 operatively connected with a floor or platform 233 which seats thereon the movable bottom 51 of a tote box and is operative to index such bottom through a plurality of vertically spaced positions upon actuation of a piston-cylinder motor means 234. Since the jack assembly 231 is essentially the same as the jack assembly 87 described heretofore in detail, a part-by-part consideration of the jack assembly 231 appears

unnecessary and will not be set forth. It may be observed, however, that while the jack assembly **87** is operative to index the movable bottom **51** of a tote box **32** downwardly through a plurality of successive positions as the tote box is loaded layer-by-layer, the jack assembly **231** functions reversely to successively elevate the movable bottom **51** through a plurality of positions as the tote box is unloaded layer-by-layer.

Located above the unloading station **229** is a layer-displacing conveyor mechanism **235** which is analogous to the aforedescribed layer-displacing conveyor mechanism **50** associated with the tote box loader **25**. In this respect, then, the conveyor mechanism **235** includes a pair of transversely spaced endless chains **236** entrained at one of the ends about transversely spaced sprockets mounted upon a common shaft **237**, and entrained at their opposite ends about transversely spaced sprockets mounted upon a common shaft **238**. The shaft **238** is equipped with a drive sprocket **238** engaged by a chain **240** which is driven by a motor **241** via a drive sprocket **242** connected thereto. Extending transversely between the chains **236** at spaced-apart locations therealong are a pair of conveyor flights or pushers **243** and **244** adapted to selectively engage the successive uppermost layers of cartons as each such layer is indexed upwardly by the jack assembly **87** into proximity with the conveyor mechanism **235**.

As concerns coaction of the pushers **243** and **244** with the successive uppermost layers of cartons provided by a tote box **32**, it may be noted that the pushers are moved from right to left, as viewed in FIG. 16 (i.e., in a clockwise direction about the shaft **237**), and such pushers in their path of travel alternately engage the successive uppermost layers of cartons. It should be observed that each tote box **32** is continuously maintained in precisely the same orientation as it moves through the entire fabrication and storage line shown in FIG. 1 so that, for example, the same side wall of a tote box will face toward the top of the FIG. 1 drawing as the tote box moves through the loader **25**, along the conveyor structure **33**, into the storage bank loader **35**, into and out of the storage bank **37**, through the appropriate unloader **40**, and along the return conveyor **41** to the loader **25** to be used again in a subsequent cycle. Accordingly, the cartons **24** in any tote box **32** located at the unloading station **229** are stepped in a direction permitting the successive uppermost layers of cartons to be stripped from the underlying layer, or bottom **51** in the case of the final layer.

In being removed from a tote box **32**, the cartons **24** have lateral confinement supplied thereto by transversely spaced guide members **245**; and a guide member **246** is provided adjacent the forward or discharge edge of the tote box **32** to guide the cartons thereat. All of the guide members **245** and **246** tend to maintain the cartons **24** in the layer-by-layer disposition thereof as the bottom **51** of the tote box is indexed upwardly by the jack assembly **231**, and as each successive layer is displaced by the conveyor **235** onto a receiving conveyor **247** that overlies the ready station **228**.

The receiving conveyor **247** comprises a plurality of relatively narrow, transversely-spaced belts **248** which are endless and at one of their ends are entrained about an elongated drive drum **249**, and at their opposite ends are entrained about an idler drum **250**. The endless belts **248** are continuously driven and movement is imparted thereto by the drive drum **249** which is driven by a belt **251** entrained about a sheave drivingly connected with the drum **249** via the shaft **252** therefor. The drive belt **251** passes over a plurality of idler pulleys, as shown in FIGS. 16 and 18, and is driven by a pulley wheel mounted upon a shaft **252** so as to rotate therewith.

The shaft **252** is journalled for rotation in suitable bearings mounted upon the frame structure **226** of the unloader **40**, and the shaft **252** is rotatably driven by a motor **253** via a belt **254** which at one end is entrained about a drive pulley mounted upon the shaft **252**, and at its opposite end is entrained about a drive sprocket connected with the motor **253**. The motor **253** may operate continuously, but usually operates intermittently upon demand from the color selector **38** (as explained in copending application Ser. No. 562,204 filed July 1, 1966, now Pat. No. 3,371,767, dated Mar. 5, 1968), and through its connection with the shaft **252** drives the drum **249** which in turn imparts motion to the conveyor belt **248** tending to move cartons **24** supported thereon from right to left, as viewed in FIG. 16. It may be noted that longitudinally extending guide members **255** are provided along the sides of the receiving conveyor **247** to confine the cartons within fixed transverse dimensions during such movement thereof by the conveyor **247**.

Adjacent the discharge end of the receiving conveyor **247** is a row-delivery mechanism operative to deliver cartons row-by-row from the conveyor **247** to the color selector infeed conveyor **39**. Such mechanism includes an elongated transversely extending support or carrier **256** mounted at its opposite ends on crank arms **257** and **258** respectively supported on stub shafts **259** and **260** for angular displacements therewith. As illustrated in FIG. 17, the shafts are journalled for rotation in bearings affixed to vertical components of the frame structure **226**; and as shown in FIG. 18, the shaft **260** has secured thereto a crank arm **261** equipped at its upper end with a cam follower **262** adapted to ridingly engage a cam **263** effective to displace the follower **262** between an inner position, shown by full lines in FIG. 18, and an outer position, illustrated by broken lines. The cam follower **262** is resiliently biased into engagement with the cam **263** by a helical spring **264**. The cam **263** is mounted upon the aforementioned shaft **252** so as to rotate continuously therewith.

The support **256**, as best evidenced in FIG. 18, carries a relatively large, flat plate **265** that is movable with the support between a substantially horizontal position shown by full lines in such figure, in which position the plate is in substantial alignment with the belts **248** of the receiving conveyor **247** so as to receive cartons **24** therefrom, and an inclined position shown by broken lines in which it has been angularly displaced with respect to the axis of the stub shaft **260** and forms a stop preventing movement of cartons **24** thereonto. These two positions of the plate **265** respectively correspond to the inner and outer positions of the cam follower **262**.

As concerns the stop-forming function of the plate **265**, when it is displaced in a counterclockwise direction, as viewed in FIG. 18, by coaction of the cam follower **262** and cam **263**, the inner end of the plate is swung upwardly into the path of movement of the next successive row of cartons **24** being advanced by the receiving conveyor **247**, as shown in FIG. 18. Thus, such next successive row of cartons cannot be advanced onto the plate **265** until the plate has been returned to its horizontal position. However, such upward displacement of the plate **265** causes the row of cartons **24** then positioned thereon to be elevated into a position in which the pusher bar or flight **266** of a stripping conveyor **267** can engage the upper corner portion of each such carton to push the same from right to left, as viewed in FIG. 18, downwardly along the plate **265** and onto the color selector infeed conveyor **39**.

The pusher bar **266** extends between a pair of transversely spaced endless chains **268** entrained at opposite ends about spaced-apart sprockets therefor which are mounted, respectively, on shafts **269** and **270**. The shaft **270** is equipped with a drive sprocket operatively connected with a drive chain **271** driven by a sprocket **272** mounted upon the aforementioned shaft **252**. Evidently, then, the chains **268** of the conveyor **267** are continuously driven because of their connection with the continuously (or intermittently) driven shaft **252**, wherefore the pusher bar **266** traverses the path of travel defined by the chains

268. In traversing this path, the pusher bar engages any cartons 24 supported by the plate 265 whenever such plate is in its elevated position, and quite apparently the pusher bar 266, plate 265, and support 256 are synchronously related in a time sense since they are driven from the shaft 252. In that the conveyor 247 operates continuously, or intermittently upon demand as explained with reference to the motor 253 and conveyor belt 248 driven thereby, it is always conditioned to supply a row of cartons 24 to the plate 265 so long as any cartons 24 are positioned on the conveyor.

Also comprising a part of the tote box unloader 40 is an alignment-enforcing mechanism 273 illustrated in FIGS. 19 and 20 and operative to maintain each row of cartons 24 in aligned juxtaposition as it is displaced onto the color selector infeed conveyor 39 from the plate 265 by the stripping conveyor 267. More particularly in this respect, the color selector infeed conveyor 39 operates to provide at the color selector 38 a supply of cartons 24 of the particular color being handled by such conveyor. Evidently, then, since the conveyor 39 may be in motion at any particular time, cartons being discharged downwardly along the inclined plate 265 may touch a moving conveyor in which event they tend to be immediately advanced thereby. In that only the forward lower corner portion of each carton would be in initial contact with such moving conveyor 39, a skewed disposition would tend to be enforced on those cartons as a consequence of the relative movement between the traveling conveyor 39 and stationary plate 265. The alignment-enforcing mechanism 273 prevents such skewing of the cartons from occurring by constraining the entire row of cartons against movement along with the conveyor 39 until all of the cartons in their entirety are resting thereon.

The mechanism 273 includes an alignment or abutment plate 274 bolted or otherwise secured to a depending bracket 275 which at its upper end is bolted to a generally U-shaped pivot 276 supported for pivotal movement by a stationary carrier 277. Connected to the pivot 276 so as to enforce angular displacements thereon is a crank arm 278 pivotally connected to the lower end of a push rod 279 that at its upper end is pivotally connected to one end of an elongated lever 280. The lever 280 at its opposite end is equipped with a collar or hub 281 pivotally supported on a pin 282 mounted upon frame components of the apparatus, as shown at 283.

Formed integrally with or otherwise secured to the hub 281 is a cam follower arm 284 which at its outer free end is equipped with a cam follower 285 that ridingly engages a cam 286 operative to displace the cam follower 285 between the inner and outer positions thereof respectively illustrated in FIG. 19 by full and broken lines. The arm 284 is resiliently biased by a helical spring 287 in a clockwise direction, as viewed in FIG. 19, to maintain the cam follower 285 in engagement with the surface of the cam 286. The spring 287 is affixed at one end to the arm 284 and at its opposite end to stationary components of the apparatus.

The cam 286 through the cooperative interrelation of the cam follower 285, arm 284, lever 280, push rod 279, and crank arm 278 is effective to displace the alignment plate 274 between its lower carton-engaging position shown by full lines in FIG. 20 and its upper carton release position shown in FIG. 17. The cam 286 is mounted upon the shaft 252 so as to rotate therewith and, therefore, is driven continuously in enforced synchronism with the stripping conveyor 267 and with the angular displacements of the plate 265. Accordingly, movement of the alginment plate 274 between the two alternate positions thereof is timed with the conveyor and plate, and it may be noted that because of the differential between the lengths of the crank arm 278 and lever 280, angular displacements of the plate 274 between the alternate positions thereof will be quite rapid.

OPERATIONAL CYCLE

Considering an overall cycle of operation, cartons of facial tissue are advanced along the infeed conveyor 23 in contiguous juxtaposition and are intended to have a predetermined orientation since the three dimensions of a rectangular carton of facial tissue usually differ from each other. In the particular apparatus being discussed, the cartons 24 are intended to be supported upon a side wall thereof and to extend transversely of the conveyor so that the two ends of each carton are disposed adjacent the lateral edges of the conveyor. In the event that any particular carton 24 is improperly positioned as it is advanced along the infeed conveyor 23, the position-sensor mechanism 225 (FIG. 3) is operative to detect such condition of misalignment and to eject or displace the misaligned carton from the conveyor by imparting a transverse impulse or push to such carton to force it off of the conveyor.

In the usual condition of the apparatus, the by-pass conveyor section 26 is ineffective to control the processing of cartons 24 and, accordingly, the stop mechanism 53 (FIG. 3) is in the upper position thereof in which it does not interfere with the movement of cartons along the conveyor, and the interrupter mechanism 54 and row-displacing pusher mechanism 55 are maintained in the inactive positions thereof in which cartons are free to move without interference therefrom along the infeed conveyor. Thus, as the cartons move in side-by-side juxtaposition past the by-pass conveyor section 26, they eventually have their motion stopped by abutment of the leading carton of each successive group thereof with the abutment plate 106 of the stop mechanism 44 (FIGS. 3 and 12 through 15). Just prior to such engagement of each leading carton 24 with the abutment plate 106, such carton 24 engages the actuator 120 and displaces the same, which displacement thereof results in actuation of the switch 126, whereupon a cycle of operation is initiated.

As part of such cycle of operation, the shaft 139 begins to rotate, and the consequent rotation of the cam 138 mounted thereon causes the push rod 131 to displace the entire stop mechanism 44 in a counterclockwise direction, as viewed in FIG. 14, to relieve compression of the cartons 24, defining a row thereof, thereby facilitating movement of such row from the infeed conveyor and onto the stationary platform 48 of the tote box loader 25. Also as a part of such cycle of operation, the cam 174 is rotated by the shaft 139 whereupon the push rod 170 of the interrupter mechanism 45 (FIGS. 3, 6, 9 and 10) is caused to manipulate the carton-gripper plate structures 156 and 157 to effect inward displacement thereof from their outer positions shown in FIG. 9 to their inner positions shown in FIG. 6 to resiliently clamp a carton 24 therebetween. Such clamped carton 24 is thereby held against movement in either direction along the infeed conveyor 23 and, therefore, allows decompression of the row of cartons forwardly thereof upon the aforementioned angular displacement of the stop mechanism 44.

Also as a part of such cycle of operation, the shaft 139 rotates the cams 150 and 155 to bring the row-displacing pusher mechanism 46 (FIGS. 3 and 6) into action. Such action thereof causes the pusher bar 140 to traverse the arcuate path of travel depicted in FIG. 6 to advance the entire row or group of cartons defined between the stop mechanism 44 and interrupter mechanism 45 onto the stationary platform 48 of the tote box loader 25. As explained heretofore, as soon as such row of cartons has been displaced from the infeed conveyor, the interrupter mechanism 45 is released to enable the infeed conveyor to advance the next row-forming group of cartons into position between the stop mechanism and interrupter mechanism while the row-displacing pusher mechanism 46 is being returned to its starting position. The cyclic operation described continues repetitively so long as car-

tons are being advanced along the infeed conveyor **23**, and each cycle is initiated by abutment of the leading carton **24** in a row thereof with the actuator **120** of the stop mechanism **44** because of the consequent actuation of the cycle-initiating switch **126**.

Successive rows **47** or cartons continue to be advanced onto the stationary platform **48** until a predetermined number of rows are accumulated thereon, which accumulation thereof initiates operation of the layer-displacing conveyor mechanism **50** (FIGS. 4 and 5) as a result of the actuation of the switch **195** which follows engagement of the depending arm **196** thereof with a carton **24** moving into a predetermined position on the platform **48**. Energization of the conveyor mechanism **50** slectively brings one or the other of the conveyor flights or pushers **197** and **198** into engagement with the upper trailing corner portion of the cartons defining the final row **47** thereof, and such pusher then displaces the entire layer **49** of cartons onto the movable bottom **51** (or onto a layer of cartons already supported by such bottom) of a tote box **32** located at the loading station **52**. Such layer-by-layer loading of the tote box **32** continues until the tote box is entirely loaded in which condition thereof the movable bottom **51** is in its lowermost position within the tote box and is supported upon the inwardly turned bottom edges thereof.

Further concerning such layer-by-layer loading of each tote box, as soon as an empty tote box is moved into the loading station **52**, the motor means **94** is energized through appropriate switch controls to displace the movable bottom **51** of such tote box upwardly and into a position of substantial alignment with the platform **48** (as shown in FIG. 4) so that the first complete layer **49** of cartons on such platform **48** can be displaced therefrom onto the bottom **51**. The motor means **94** is then energized through switch control circuitry to displace the bottom **51** downwardly to the next successive position thereof in which the upper surfaces of the cartons **24** supported upon such bottom are then in approximate alignment with the platform **48** so that the next successive layer **49** of cartons can be displaced therefrom and onto the layer previously received by the bottom **51**. The movable bottom **51** is then displaced downwardly through actuation of the motor means **94** to the next successive step for receipt of a subsequent layer **49** of cartons from the platform **48**, and such step-by-step downward indexing of the bottom **51** continues seriatim until the tote box is completely loaded, whereupon the releasable stop structure **73** (FIG. 8) is retracted and the tote box conveyor structure **33** energized to remove such loaded tote box **32** from the loading station **52**.

As explained heretofore, each successive layer **49** of cartons after displacement thereof onto the movable bottom **51** of the tote box, or onto a layer of cartons already supported thereby, is accurately located and positioned by the confining displacer **204** and by the presser mechanism **205**. As concerns the confining displacer **204**, the layer-displacing conveyor mechanism **50** may be thought of as imparting a slight over-travel to each layer **49** of cartons displaced thereby so as to make sure that the cartons of each such layer clear or pass over the upper forward corner portion of each carton therebelow, or the upper corner portion of the steps of the movable bottom **51**, as the case may be. The confining displacer **204** compensates such over-travel by displacing the entire layer of cartons in the opposite direction to move the lower trailing corner portion of the cartons in each such layer toward the upper leading corner portion of the underlying cartons or stop.

The removal of a filled tote box **32** from the loading station **52** signals the requirement for an empty tote box thereat, and the tote box conveyor structure **33** then becomes operative to advance a tote box from the awaiting station therefor beneath the stationary platform **48** into the loading station **52** concurrently with removal of a loaded tote box therefrom. Such concurrent advancement of an empty tote box from the awaiting station empties the same to condition it for receipt of another empty tote box advanced thereinto by operation of the reciprocable displacement mechanism **83** (FIGURE 7) which is made active by control switches actuated upon removal of a tote box from the awaiting station. Such operation of the displacement mechansm **83** is accompanied by energization of the motor means **72** to elevate the transveyor section supported thereon and thereby permit movement of a tote box **32** by the displacement mechanism **83** into the awaiting station. Upon return of the displacement mechanism **83** to the starting position shown by broken lines in FIG. 7, the motor means **72** lowers such transveyor section, whereupon the next successive tote box **32** located along the return conveyor **41** can be advanced into position on the transveyor section enabling the displacement mechanism **83** to advance the same into the awaiting station in the following cycle of operation.

After a filled tote box **32** leaves the tote box loader **25**, it is advanced to the pickup station **34** whereat the storage bank loader **35** transports such tote box into an approximate storage location therefor in the storage bank **37**. Whenever there is a need for tissue of the particular color stored within such tote box, the loader **35** removes the tote box from the storage bank **37** and deposits the tote box at the appropriate tote box unloader **40** for unloading thereat. After such tote box is so deposited at the unloader therefor, it is advanced into the ready station **228** along the infeed conveyor **227** (FIG. 16) of the tote box unloader. Each such tote box is subsequently advanced from the ready station **228** and into the unloading station **229** whereat the cartons **24** are removed therefrom layer-by-layer.

In this respect, movement of a tote box into the unloading station **229** energizes the jack assembly **231** to cause the motor means **234** thereof to elevate the movable bottom **151** of the tote box and cartons supported thereby into the first unloading position thereof in which the uppermost layer of cartons is adapted to be selectively engaged by one or the other of the conveyor flights or pushers **243** and **244** provided by the layer displacing conveyor mechanism **235** to remove such uppermost layer from the underlying support therefor and onto the receiving conveyor **247**. This step-by-step elevation of the movable bottom **51** and removal of the successive uppermost layers of cartons is repeated seriatim until the tote box is completely unloaded at which time the motor means **234** of the jack assembly **231** returns the bottom **51** to its lowermost position and withdraws therefrom to enable the emptied tote box to be forwarded by the return conveyor **41** toward the tote box loader **25**. The upward step-by-step indexing of the movable bottom **51** of each tote box when in the unloading station **229** is controlled by switch means appropriately located to sense the requirement for the next successive layer of cartons at a position in which the conveyor mechanism **235** can engage the same. Evidently, such switch means governs energization of the conveyor mechanism **235**, which conveyor operates intermittently in accordance with the presence of a layer of cartons in a position for engagement by one or the other of the pushers **243** and **244**.

As each layer of cartons is advanced onto the receiving conveyor **247**, such cartons are displaced thereby from right to left, as viewed in FIG. 16, because of the continuous operation of the receiving conveyor. Movement of the cartons along the conveyor is terminated adjacent the forward end thereof by the intermittent stop function performed by the inner edge of the plate **265** (FIG. 18) which is cyclically disposed in and withdrawn from the path of movement of such cartons. Such cyclic movement of the plate **265** is enforced thereon through the cam **263**, cam follower **262**, and crank arm **261**, and whenever the plate is in its lower position of

substantial alignment with the upper reach of the conveyor **247**, the forwardmost row of cartons **24** can be advanced from the conveyor onto the plate. The plate is then tipped upwardly to form a stop constraining the successive row of cartons against movement, and the row of cartons then positioned upon the plate **265** is stripped therefrom by the conveyor **267** which displaces such row of cartons onto the color selector infeed conveyor **39**.

During such removal of the cartons from the plate **265**, they are constrained against movement with the continuously operating conveyor **39** by the alignment plate **274** of the alignment-enforcing mechanism **273**, which plate **274** at this time is in a lowered position in which it extends across the conveyor **39**. As soon as such row of cartons has been completely displaced from the plate **265** and onto the conveyor **39**, the plate **274** is displaced upwardly by action of the cam **286** and cam follower **285** (and associated lever system) to permit the cartons to be advanced by the conveyor **39** to the color selector **38**. The stripping conveyor **267** is continuously driven and the plate **265** and alignment plate **274** are movable between the alternate positions thereof in enforced synchronism with the conveyor **267** because they are all driven from the same shaft **252**.

Whenever it is desired to by-pass the tote box loader **25** and components of the system following thereafter, the by-pass conveyor **26** is made operative by energizing the motor **179'** thereof which drivingly rotates the shaft **139'** upon command from the stop mechanism **53**, as heretofore explained with respect to the stop mechanism **44**, motor **179**, and shaft **139** associated with the tote box loader. Whenever the by-pass conveyor **26** is made operative, the motor **179** may be de-energized since there is then no occasion to use the tote box loader **25**. The by-pass conveyor **26** in its relation to the infeed conveyor **23** functions in the manner heretofore explained with reference to the tote box loader **25**, and in this reference movement of cartons **24** along the infeed conveyor is terminated by abutment of the leading carton in each group thereof with the stop mechanism **53**, following which the interrupter mechanism **54** closes to grip the cartons then positioned therebetween, the stop mechanism **53** releases the row of cartons located between it and the interrupter mechanism, and the row-displacing pusher mechanism **55** is made operative to displace such row from the infeed conveyor **23** and onto the by-pass conveyor **26** which carries such cartons to the discharge conveyor **28** for processing in the case packer **29** and palletizer **30**, as heretofore explained.

It will be appreciated from all of the foregoing discussion that an article-handling or processing method is comprehended in which articles such as the facial tissue cartons **24** are advanced along a predetermined path defined, in the particular system considered, by the infeed conveyor **23**. Such articles are advanced in a substantially continuous procession thereof in which they follow each other in substantially side-by-side juxtaposition. Along such path, the articles are collected into successive groups thereof each comprising a plurality of articles, and the groups are then organized onto successive layers each of which comprises a plurality of groups. Each such layer is formed along the stationary loading platform **48**, and it is delivered from such platform to a container for receipt therein, which container in the present instance constitutes a tote box **32**.

As explained heretofore, the bottom of the tote box is movable and in the loading of the tote box, the bottom thereof is moved downwardly from the an initial position of substantial alignment with the loading platform **48** in step-by-step relation with the successive displacement of layers of articles from such platform so that a receiving surface for each successive layer is always available at a location of substantial alignment with the loading platform. With respect to the first layer received by any particular tote box **32**, such receiving surface constitutes the upper surface of the movable bottom **51** and for each successive layer thereafter, the receiving surface constitutes the upper surface of the preceding layer.

The method of handling articles also comprehends removal thereof from such container which again constitutes a tote box **32** in the particular system under consideration. In unloading such container, the movable bottom thereof is indexed upwardly step-by-step to present and make available each successive layer of articles for removal from the container. After each layer is so removed from the container, it is subdivided into its component groups and the groups are then advanced along a predetermined path for subsequent processing, which path in the apparatus hereof constitutes a color selector infeed conveyor **39**. It may be noted that in the event details of the color selector **38** are desired, reference may be made to copending patent application Ser. No. 562,204 filed July 1, 1966, now Pat. No. 3,371,767, dated Mar. 5, 1968; and details concerning the storage bank loader **35** and storage bank **37** can be found in copending patent application Ser. No. 633,137, filed Apr. 24, 1967.

While in the foregoing specification an embodiment of the invention has been set forth in considerable detail for purposes of making a complete disclosure thereof, it will be apparent to those skilled in the art that numerous changes may be made in such details without departing from the spirit and principles of the invention.

What is claimed is:

1. In apparatus for loading into a container therefor a plurality of articles such as facial tissue cartons and the like, an infeed conveyor for advancing such articles in row-like procession, a loading platform adjacent said infeed conveyor for receiving articles therefrom, row-displacing mechanism operative to displace articles in groups thereof from said infeed conveyor and onto said loading platform, layer-displacing mechanism operative to displace from said loading platform and into loading relation with such container a layer of articles comprising a plurality of such groups thereof, conveyor structure for moving a container into loading position with respect to said loading platform so as to receive such articles layer-by-layer therefrom and for subsequently removing loaded containers from such loading position, and mechanism adjacent said loading platform for cooperative action with such container to effect layer-by-layer receipt of such articles therein and including a jack assembly movable between an elevated position adjacent said loading platform and a retracted position therebelow for carrying therebetween a movable bottom provided by such container.

2. The apparatus of claim **1** in which said row-displacing mechanism comprises an elongated pusher extending along said infeed conveyor and transversely of said loading platform and being operative to displace groups of articles transversely from said infeed conveyor and onto said loading platform, and further comprises means for moving such pusher between an outer article-engaging position remote from said loading platform and an inner article-releasing position adjacent said loading platform.

3. The apparatus of claim **2** in which the path of travel traversed by said pusher in moving between the outer and inner positions thereof is transversely across said infeed conveyor, and in which said means for moving said pusher includes mechanism for elevating the pusher to a location above said infeed conveyor sufficient to pass over articles advancing therealong when said pusher moves from said inner to said outer position thereof.

4. The apparatus of claim **1** and further comprising stop mechanism positioned along said infeed conveyor for terminating the advance of articles therealong, and interrupter mechanism disposed along said infeed conveyor a spaced distance from said stop mechanism and being coactive therewith to define each such successive group of articles therebetween.

5. The apparatus of claim 4 in which said interrupter mechanism comprises carton-gripping structures movable between open and closed positions and being effective in the latter position thereof to grip a carton therebetween and thereby constrain the same against movement along said infeed conveyor, and further comprises means for moving said carton-gripper structures between such open and closed positions thereof.

6. The apparatus of claim 5 in which said stop mechanism includes components operative to withdraw the same from the leading carton in each successive group thereof when said carton-gripper structures are in their closed position.

7. The apparatus of claim 4 in which said interrupter mechanism is selectively operative to permit articles to move therepast and to terminate movement thereof, and in which said stop mechanism includes components operative to withdraw the same from the leading carton in each successive group thereof when said interrupter mechanism is operative to terminate movement of articles.

8. The apparatus of claim 1 and further comprising stop mechanism positioned along said infeed conveyor for terminating the advance of articles therealong, interrupter mechanism disposed along said infeed conveyor a spaced distance from said stop mechanism and coactive therewith to define each such successive group of articles therebetween, and in which said row-displacing mechanism comprises an elongated pusher extending along said infeed conveyor transversely of said loading platform and being operative to displace from said infeed conveyor a group of articles defined between said stop and interrupter mechanisms.

9. The apparatus of claim 8 in which the path of travel traversed by said pusher in moving between the outer and inner positions thereof is transversely across said infeed conveyor, and in which said means for moving said pusher includes mechanism for elevating the same to a location above said infeed conveyor sufficient to pass over articles advancing therealong when said pusher moves from said inner to said outer position thereof.

10. The apparatus of claim 1 in which said layer-displacing mechanism comprises conveyor means operative to displace an entire layer of articles along said loading platform and into loading relation with such container.

11. The apparatus of claim 10 in which said conveyor means includes a pair of spaced-apart conveyor chains and a conveyor flight extending therebetween, said conveyor flight being advanced into pushing engagement with each such layer of cartons to displace the same along said loading platform upon movement of said chains.

12. The apparatus of claim 1 in which said jack assembly comprises a base adapted to support such movable bottom thereon, and further comprises motor means for moving said base downwardly in step-by-step relation with the successive displacement of layers of articles from said loading platform.

13. The apparatus of claim 1 and further comprising presser mechanism adjacent said loading platform at such container-loading position, said presser mechanism being operative to urge articles comprising a layer thereof downwardly toward the interior of such container to positively seat such articles upon a surface underlying the same.

14. The apparatus of claim 13 in which said presser mechanism comprises a plurality of elongated presser feet respectively aligned with groups of articles comprising each such layer thereof.

15. The apparatus of claim 13 and further including a confining displacer extending across the path of movement enforced on each such layer of articles by said layer-displacing mechanism and being operative to enforce on each such layer a limited movement in a direction opposite to the direction of movement imparted to each such layer by said layer-displacing mechanism.

16. In apparatus for loading into a container therefor a plurality of articles such as facial tissue cartons and the like, an infeed conveyor for advancing such articles in row-like procession, a loading platform adjacent said infeed conveyor for receiving articles therefrom, row-displacing mechanism operative to displace articles in groups thereof from said infeed conveyor and onto said loading platform, layer-displacing mechanism operative to displace from said loading platform and into loading relation with such container a layer of articles comprising a plurality of such groups thereof, and conveyor structure for moving a container into loading position with respect to said loading platform so as to receive such articles layer-by-layer therefrom and for subsequently removing loaded containers from such loading position, said row displacing mechanism comprising an elongated pusher extending along said infeed conveyor and transversely of said loading platform and being operative to displace groups of articles transversely from said infeed conveyor and onto said loading platform, and further comprising means for moving such pusher between an outer article-engaging position remote from said loading platform and an inner article releasing position adjacent said loading platform, the path of travel traversed by said pusher in moving between the outer and inner positions thereof being transversely across said infeed conveyor, and said means for moving said pusher including mechanism for elevating the pusher to a location above said infeed conveyor sufficient to pass over articles advancing therealong when said pusher moves from said inner to said outer position thereof.

17. In apparatus for loading into a container therefor a plurality of articles such as facial tissue cartons and the like, an infeed conveyor for advancing such articles in row-like procession, a loading platform adjacent said infeed conveyor for receiving articles therefrom, row-displacing mechanism operative to displace articles in groups thereof from said infeed conveyor and onto said loading platform, layer-displacing mechanism operative to displace from said loading platform and into loading relation with such container a layer of articles comprising a plurality of such groups thereof, conveyor structure for moving a container into loading position with respect to said loading platform so as to receive such articles layer-by-layer therefrom and for subsequently removing loaded containers from such loading position, stop mechanism positioned along said infeed conveyor for terminating the advance of articles therealong, and interrupter mechanism disposed along said infeed conveyor a spaced distance from said stop mechanism and being coactive therewith to define each such successive group of articles therebetween, said interrupter mechanism comprising carton-gripping structures movable between open and closed positions and being effective in the latter position thereof to grip a carton therebetween and thereby constrain the same against movement along said infeed conveyor, and further comprising means for moving said carton-gripper structures between such open and closed positions thereof, said stop mechanism including components operative to withdraw the same from the leading carton in each successive group thereof when said carton-gripper structures are in their closed position.

18. In apparatus for loading into a container therefor a plurality of articles such as facial tissue cartons and the like, an infeed conveyor for advancing such articles in rod-like processing, a loading platform adjacent said infeed conveyor for receiving articles therefrom, row-displacing mechanism operative to displace articles in groups thereof from said infeed conveyor and onto said loading platform, layer-displacing mechanism operative to displace from said loading platform and into loading relation with such container a layer of articles comprising a plurality of such groups thereof, conveyor structure for mov-

ing a container into loading position with respect to said loading platform so as to receive such articles layer-by-layer therefrom and for subsequently removing loaded containers from such loading position, stop mechanism positioned along said infeed conveyor for terminating the advance of articles therealong, and interrupter mechanism disposed along said infeed conveyor a spaced distance from said stop mechanism and being coactive therewith to define each such successive group of articles therebetween, said interrupter mechanism being selectively operative to permit articles to move therepast and to terminate movement thereof, and said stop mechanism including components operative to withdraw the same from the leading carton in each successive group thereof when said interrupter mechanism is operative to terminate movement of articles.

19. In apparatus for loading into a container therefor a plurality of articles such as facial tissue cartons and the like, an infeed conveyor for advancing such articles in row-like procession, a loading platform adjacent said infeed conveyor for receiving articles therefrom, row-displacing mechanism operative to displace articles in groups thereof from said infeed conveyor and onto said loading platform, layer-displacing mechanism operative to displace from said loading platform and into loading relation with such container a layer of articles comprising a plurality of such groups thereof, conveyor structure for moving a container into loading position with respect to said loading platform so as to receive such articles layer-by-layer therefrom and for subsequently removing loaded containers from such loading position, said layer-displacing mechanism comprising conveyor means operative to displace an entire layer of articles along said loading platform and into loading relation with such container, and said conveyor means including a pair of spaced-apart conveyor chains and a conveyor flight extending therebetween, said conveyor flight being advanced into pushing engagement with each such layer of cartons to displace the same along said loading platform upon movement of said chains.

References Cited

UNITED STATES PATENTS

1,942,555	1/1934	Kimball et al.	53—162 XR
2,613,021	10/1952	Bowes	53—62
2,698,693	1/1955	Nordquist	53—244 XR
2,752,050	6/1956	Nordquist	214—6
3,160,259	12/1964	Dalton	53—61 XR
2,692,177	10/1954	Larsen	220—93 X
2,707,142	4/1955	Waite.	

FOREIGN PATENTS

32,798	5/1965	Germany.
670,611	4/1952	Great Britain.
1,212,854	3/1966	Germany.
1,238,831	7/1960	France.

TRAVIS S. McGEHEE, Primary Examiner

R. L. SPRUILL, Assistant Examiner

U.S. Cl. X.R.

53—164, 244, 250