C. R. M. HANSEN.

NON-REFILLABLE BOTTLE.

APPLICATION FILED MAR. 1, 1913.

1,068,766. Patented July 29, 1913.

FIG. 1

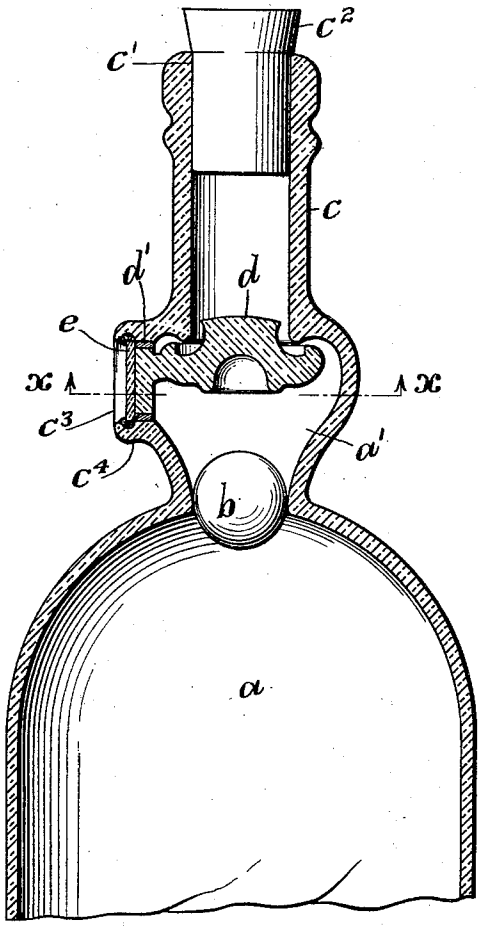

FIG. 2.

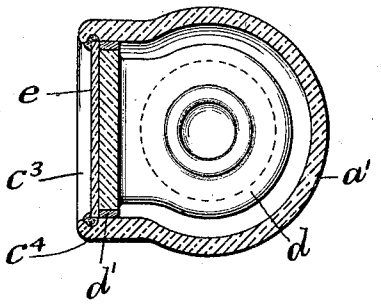

FIG. 3.

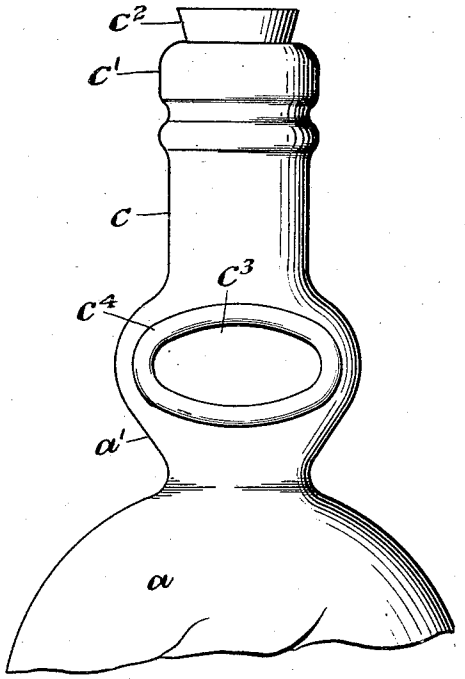

Witnesses

Thomas M. Smith

Helen F. Miller.

Inventor

Carl R. M. Hansen,

By J. Walter Douglass.

Attorney

UNITED STATES PATENT OFFICE.

CARL R. M. HANSEN, OF CYNWYD, PENNSYLVANIA.

NON-REFILLABLE BOTTLE.

1,068,766. Specification of Letters Patent. Patented July 29, 1913.

Application filed March 1, 1913. Serial No. 751,462.

To all whom it may concern:

Be it known that I, CARL R. M. HANSEN, a subject of the King of Denmark, but now residing at Cynwyd, in the county of Montgomery and State of Pennsylvania, have invented certain new and useful Improvements in Non-Refillable Bottles, of which the following is a specification.

My invention has relation to a type of bottle which has become known as non-refillable, but in this instance, it relates more particularly to a protective bottle, for containing liquors or beverages put up under trade marks or names; and to which end my present invention consists of a protective type of such a bottle, consisting of a bottle proper having an irregular-shaped neck portion integrally extended into a tubular mouth portion for a stopper, and interposed between both integral portions of said neck is arranged an approximately elliptical-shaped opening for introducing interiorly an irregular-shaped obstruction device so as to occupy a position cross-wise of the irregular-shaped portion of said neck and to extend into the tubular portion thereof, and said device having exteriorly a ring-like terminal formation to form a sealing closure of the neck about the internal obstruction device therein, and also to provide a means for application of a trade mark or name to or in the same for designating maker as well as internal contents of such a bottle.

The nature, scope and characteristic features of my present invention will be more fully understood from the following description taken in connection with the accompanying drawings forming part hereof, in which—

Figure 1, is a vertical central sectional view, partly in elevation of a broken away portion of a bottle neck, to disclose main features of my said invention. Fig. 2, is a transverse sectional view on the line *x*—*x* of Fig. 1, looking in the direction of the arrows of said figure; and Fig. 3, is a side elevational view of the neck-portion of the bottle, showing the approximate shape of the opening for inserting the irregular-shaped obstruction device, as arranged interiorly in the bottle neck.

Referring to the drawings *a*, is the bottle proper, provided with an irregular-shaped neck portion a^1. The lower portion of said neck interiorly is arranged tapering, as illustrated in Fig. 1, so as to seat a glass ball-valve *b*, therein, when the bottle is caused to occupy a vertical position, but at the same time the ball is movable from said seat to allow of free discharge then of contents around an obstruction device placed cross-wise of the neck, as more fully hereinafter explained.

c, is the upper tubular neck-section having a mouth-portion c^1, for the reception of an ordinary stopper c^2, as illustrated in Figs. 1 and 3. The said portion *c*, is formed integral with the irregular-shaped portion a^1, of the bottom proper, and in one part is provided with a substantially elliptical-shaped opening c^3, of the character illustrated in Fig. 3, for inserting the irregular-shaped obstruction device *d*, into the neck cross-wise thereof, and so that a portion of the said device extends vertically into the tubular portion of said neck. The said device *d*, is provided with a gasketed seating-ring d^1, for holding the same firmly in operative position, as clearly illustrated in Fig. 1. In front and resting against the outer side of said seating-ring d^1, is inserted in the recessed wall c^4, of the opening c^3, a plate *e*, which is cemented to the recessed wall c^4, of the said opening c^3, to secure the same against removal. On this plate *e*, in shape corresponding with the shape of the said opening c^3, may be blown in or otherwise applied, the trade name or mark of the contents of the bottle and maker of the preparation or decoction contained in said bottle.

It will be seen from the drawings that any attempt at refilling of said protective bottle will be difficult, and that as it is arranged such attempt will destroy same so that further possibility of refilling of the said bottle, is prevented.

Having thus described the nature and objects of my invention, what I claim as new and desire to secure by Letters Patent is:—

A non-refillable bottle having a tubular neck, terminating in a relatively enlarged portion, a side opening in said enlarged portion, a disk larger than the tubular neck insertible through said opening, an annular projection on said disk, said projection ex-

tending into said tubular neck, a channel formed at the juncture of said disk and said projection, said tubular neck extending partly into said enlarged portion thereby to provide a tortuous passage between said neck and said channel and means for securing said disk in place.

In witness whereof, I have hereunto set my signature in the presence of the two subscribing witnesses.

CARL R. M. HANSEN.

Witnesses:
THOMAS M. SMITH,
HELEN F. MILLER.

Copies of this patent may be obtained for five cents each, by addressing the "Commissioner of Patents, Washington, D. C."