July 3, 1923. 1,460,996

W. S. WHITE

FLUSHING VALVE

Filed May 3, 1921 2 Sheets-Sheet 1

Fig. 1.

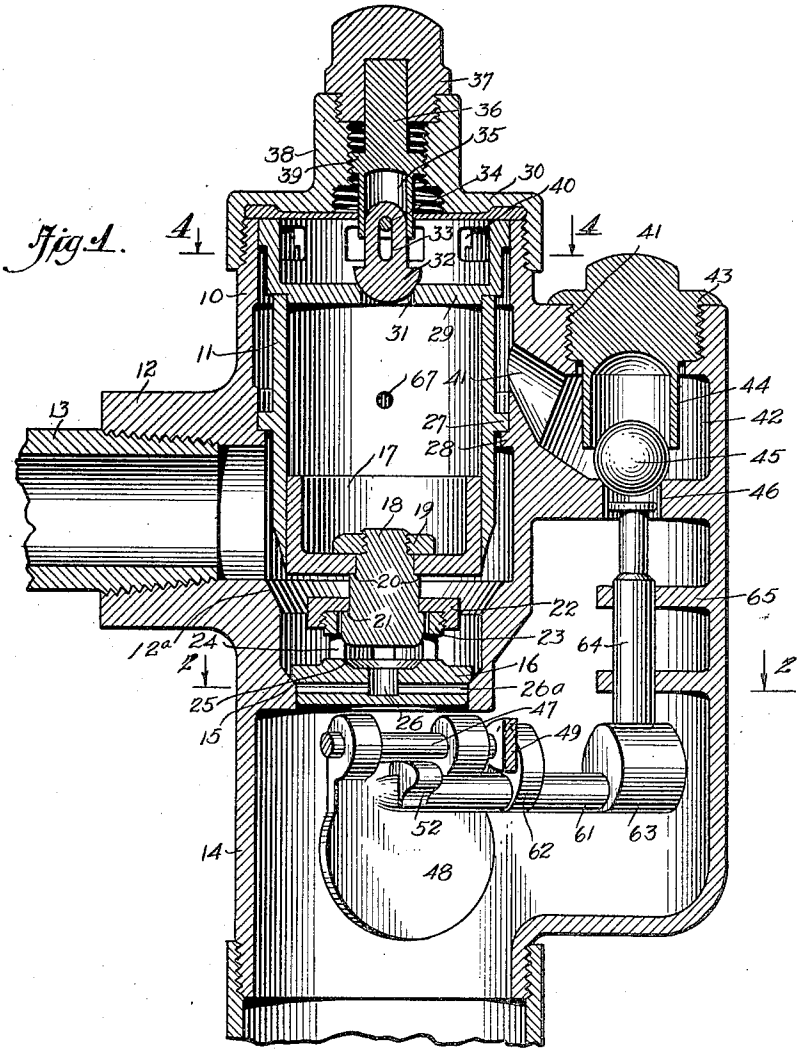

Fig. 5.

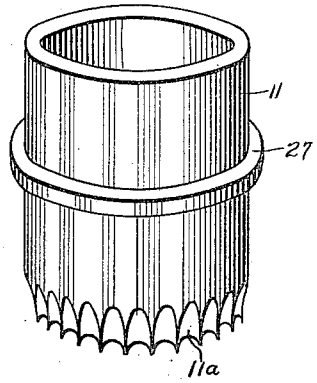

WITNESSES

Frank J. Faggiani

J. L. McAuliffe

INVENTOR

WILLIAM SEARS WHITE

BY Munn & Co

ATTORNEYS

July 3, 1923.

1,460,996

W. S. WHITE

FLUSHING VALVE

Filed May 3, 1921

2 Sheets-Sheet 2

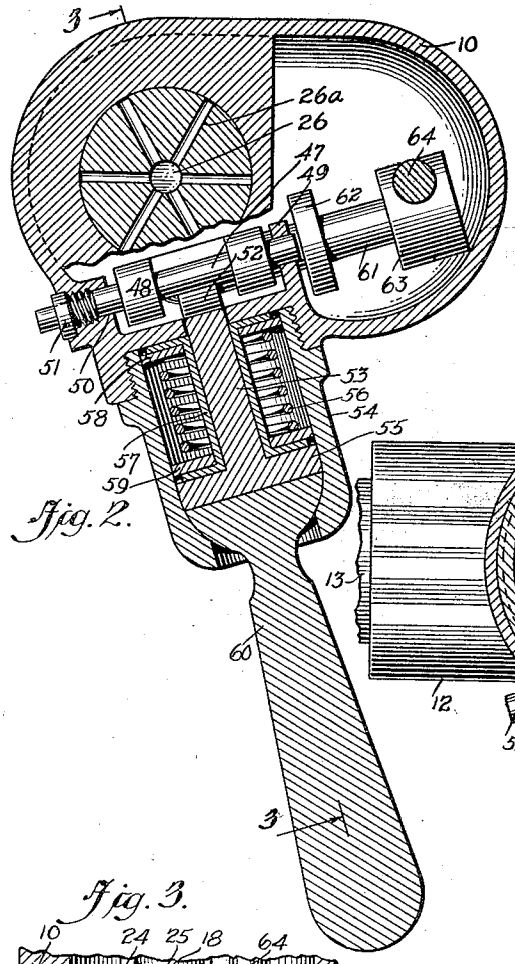

Fig. 2.

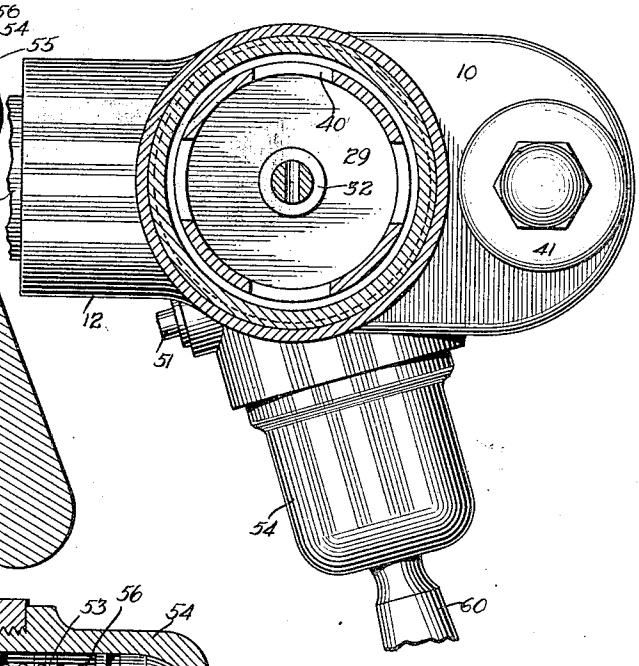

Fig. 4.

Fig. 3.

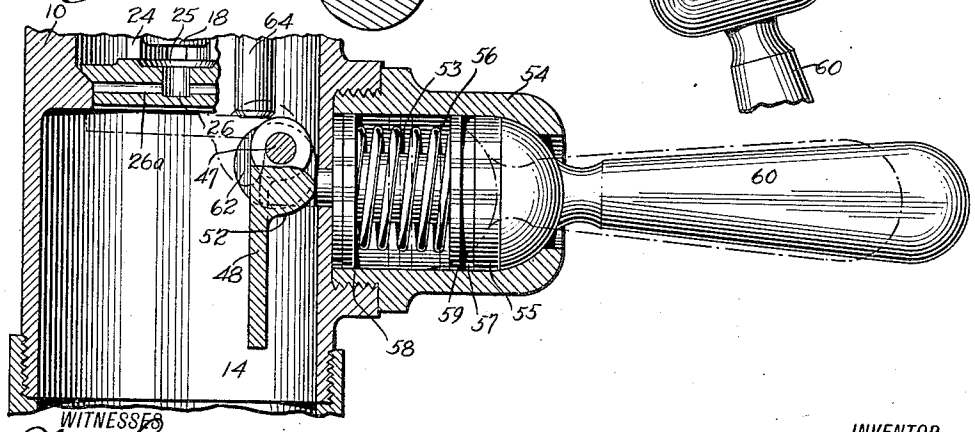

WITNESSES

Frank L. Faggiani

J. L. McAuliffe

INVENTOR

WILLIAM SEARS WHITE

BY Munn & Co

ATTORNEYS

Patented July 3, 1923. 1,460,996

UNITED STATES PATENT OFFICE.

WILLIAM SEARS WHITE, OF DENVER, COLORADO.

FLUSHING VALVE.

Application filed May 3, 1921. Serial No. 466,565.

To all whom it may concern:

Be it known that I, WILLIAM SEARS WHITE, a citizen of the United States, and a resident of Denver, in the county of Denver and State of Colorado, have invented a new and Improved Flushing Valve, of which the following is a description.

My invention relates to flushing valves and more particularly is designed as an improvement on a flushing valve forming the subject matter of Patent No. 1,311,365 granted to me July 29, 1919.

The patented flushing valve referred to includes a valve in the form of a trunk piston and controlling the passage of water from the inlet to the outlet. Included also, is an auxiliary valve for venting a chamber above the piston.

The object of the present invention is to provide a valve improved in various particulars more especially with respect to the form of the piston valve which in accordance with the present invention comprises a piston and a pendent valve movable vertically relatively to the piston to function in a particular manner that will clearly appear together with other important features as the description proceeds, one of the important results obtained being that the flow of flushing water will not cause the valve to bind.

Reference is to be had to the accompanying drawings forming a part of this specification, it being understood that the drawings are merely illustrative of one example of the invention.

Figure 1 is a vertical section of a flushing valve embodying my present invention;

Figure 2 is a horizontal section on the line 2—2, Figure 1;

Figure 3 is a detail in vertical section on the line 3—3, Figure 2;

Figure 4 is a horizontal section on the line 4—4, Figure 1;

Figure 5 is a perspective view of the cylinder.

In the illustrated form of the invention a reservoir 10 in which is fitted a cylinder 11, said reservoir having an inlet 12 to which a supply pipe 13 is connected and having an outlet 14 below the inlet.

In the outlet passage is a valve seat 15 on which a vertically movable valve 16 is adapted to seat, said valve being pendent from a trunk piston 17 operating in the cylinder 11. The connection between the valve 16 and piston 17 in the illustrated form is as follows: A nut 19 within the piston 17 engages the threaded upper end of an auxiliary valve 18 clamping the bottom of the piston between said nut and shoulder 20 on the valve 18. A further annular shoulder 21 is formed on valve 18 receiving a flanged nut 22 which engages an externally threaded ring 23 supported by posts 24 rigid with the valve 16. On the valve 16 is a seat 25 for the lower end of the valve 18, said seat being at the upper end of a central port 26 in the valve 16 from which port lateral ports 26^a emanate to the periphery of valve 16.

The cylinder 11 has an annular flange 27 seating on an annular ledge 28 formed in the reservoir 10 at the outside of the cylinder 11. Said cylinder 11 is clamped against the ledge 28 by the bottom of an auxiliary reservoir 29 engaging the upper edge of the cylinder 11 and accommodated in the reservoir 10 between said cylinder 11 and a screw cap 30 on the reservoir. In the bottom of the auxiliary reservoir 29 is a central passage 31 controlled by a valve 32. In order that the valve 32 may not tightly close the passage 31 but may allow a predetermined flow, the valve 32 has a slot 33 and a transverse pin 34 passes through said slot and through the tubular lower end 35 of a stem 36, the upper end of which is accommodated in a screw plug 37 closing the internally threaded neck 38 on the cap 30. On the stem 36 is an externally threaded flange 39 engaging the internal threads of neck 38. Thereby said stem may be raised or lowered to cause the valve 32 to hang pendent in more or less close relation to its seat on the bottom of the reservoir 29 at the top of the passage 31. The auxiliary reservoir 29 is in communication through lateral openings 40 with the space in the reservoir 10 between the walls of the reservoir and the cylinder 11, from which space leads a passage 41 to side chamber 42 having a plug 43 formed with a tubular lower end 44 in which a solid ball valve 45 may rise.

The ball valve 45 is adapted to seat on the upper end of a vertical passage 46 leading from the chamber 42. In the reservoir 10 below the valve 16 is a rock shaft 47 on which is hung a flap or butter-fly valve 48, said shaft turning at one end in a bearing 49 within the reservoir 10 and having a bearing 50 at its other end in the casing of the reservoir, said casing having a transverse

hole through which the shaft is inserted, the hole being closed by a screw plug 51. On the valve 48 is a protuberance 52 against which the end of a plunger 53 is adapted to contact, said plunger operating in a lateral cylinder 50 tapped into a side of the reservoir 10. The plunger 53 has a head 55 at its outer end and a spring 56 is coiled in said cylinder about a flanged rubber sleeve 57 on the plunger 53, the inner end of the spring bearing against a washer 58 lying against the adjacent flange of sleeve 57 and the outer end of the spring bearing against a washer 59 lying against the outer flange of said sleeve. A handle 60 extends into the outer end of the cylinder 54 and lies against the plunger head 55 so that a movement of said handle may be caused to slide the plunger 53 against the contact member 52 and will rock the valve 48 to a horizontal position in the outlet 14 directly beneath the valve 16. The spring 56 will restore the parts after operation by the handle 60. Rigid with the valve 48 and extending laterally therefrom is an arm 61 having a flange 62 lying against the bearing 59 to guide the valve 48 in its movements, said arm 61 having also a cam 63 adapted with the swinging of the valve 48 and arm 61 on the shaft 47 as an axis to bear against the lower end of a vertical plunger 64 having guided movement in brackets 65 on the reservoir 10 at the interior, said plunger 64 acting against ball valve 45 to unseat the latter.

It will be observed that the lower end of the cylinder 11 is bevelled and the bevelled portion is formed with an annular series of flutes. The body of the valve at the interior adjacent to the inner end of the inlet 12 is formed flaring as at 12^a directly beneath the tapered and fluted lower end of the cylinder. Water will be directed from the inlet 12 separately into the flutes 11^a downwardly to and through the flared portion 12^a to the outlet, the purpose being to prevent side pressure of the water which when permitted to flow in a solid body may sometimes cause flow at the opposite side of inlet 12 to eddy against the bottom of the piston 17, thereby reducing the pulling force of the suction created by the outflowing water.

With the above described construction when the handle 60 is moved, the shaft 61 and cam 63 are swung through an arc with the shaft 47 as an axis, said cam engaging the plunger 64 and unseating the valve 45, thereby venting the auxiliary reservoir 29. The valve 48 will be positioned across the outlet beneath the valve 16 and cause back pressure so that the water will back up causing the piston 17 and valve 16 to rise. Any undue lateral pressure of the flushing water escaping from the inlet 12 to the outlet 14 will tilt the valve 16 instead of causing the piston 17 to bind in the cylinder 11. By allowing the pendent main valve 16 to move downwardly independent of the piston 17, said valve drops and is forced to its seat by a downward flow of water. When the pendent valve is seated and while it is descending, the valve seat 25 is below the lower end of the valve 18 leaving an opening which eventually is closed by descent of piston 17 and valve 18 after the seating of the valve 16. The port 26 and passages 26^a permit the water when first flowing to pass through the valve and into the outlet 14 above the valve 48 to produce a back pressure between the valve 48 and the valve 16 and seat 15, when the valve 18 is raised and before the valve 16 rises. The provision for the flow of water between the valves 18 and 16 also is for the purpose of not allowing the flow of water to be cut off too quickly when the main valve seats, a limited amount of water being permitted to escape while the water is backing up around the piston and into the cylinder 11 and auxiliary reservoir 29 to force down piston 17 and valve 18, the final stopping of the flow taking place by closing the small area at the valve seat 25 instead of closing a large area. The piston 17 does not descend across the inlet 12, the object being to keep the outer surface of the complete piston flanged against the inner walls of the cylinder 11, so that rust will not have a chance to accumulate on the outer surface of the piston which might be the case were the piston allowed to project below the cylinder 11. The water outflowing between the tapered and fluted lower end of the cylinder 11 and the flared portion 12^a is directed downwardly to flow over the seat 12 and below and away from the valve 16 and piston 17, the downward flow of the water causing a suction on valve 16 and piston 17 which effectively draws these downward causing them to approach a closed position during the early stages of their descent, thereby avoiding the necessity of a small water by-pass or other expedient to cause the seating parts to close. The closing action insures the result of the main valve closing without pulling down the piston. With the downward suction on the piston there is a vacuum produced above the piston but this is relieved by the valve 32 in the passage 31.

By providing an ample space above the seat 25 a surplus of water is insured above the passage 26, the water choking in said passage so that the seating of the parts and stoppage of the flow is noiseless or essentially so.

A transverse hole 67 is formed in the cylinder 11 and it factors in regulating the descent of the piston 17 and therefore regulating the period of flushing since the downward movement of the piston will be comparatively slow until the hole 67 is un-

covered, breaking the vacuum above the piston.

I would state in conclusion that while the illustrated example constitutes a practical embodiment of my invention, I do not limit myself strictly to the mechanical details herein illustrated, since manifestly the same can be considerably varied without departure from the spirit of the invention as defined in the appended claims.

Having thus described my invention, I claim:

1. A flushing valve including a reservoir having an inlet and an outlet, a piston in the reservoir above the inlet, a valve pendent from the piston and movable relatively thereto and adapted to close said outlet, said valve having a passage therethrough, and an auxiliary valve carried by the piston and adapted to close said passage by a movement of the piston toward the first-mentioned valve.

2. A flushing valve including a reservoir having an inlet and an outlet, a valve controlling communication between the inlet and outlet, a valved passage through said valve, and manually movable means adapted to be disposed across the outlet beneath the valve to cause back pressure by the water flowing from the inlet through said valve passage.

3. A flushing valve including a reservoir having an inlet and an outlet, a piston in the reservoir above the inlet, a valve pendent from the piston and movable relatively thereto and adapted to close said outlet, said valve having a passage therethrough, and an auxiliary valve carried by the piston and adapted to close said passage by a movement of the piston toward the first-mentioned valve; together with a valve adapted to vent the reservoir above the piston, and means to open the last-mentioned valve with the raising of said piston.

4. A flushing valve including a reservoir having an inlet and an outlet, a piston in said reservoir above the inlet, a valve controlling the outlet, said valve having a passage therethrough, an auxiliary valve carried by the piston and adapted to close said passage by the descent of the piston after the first-mentioned valve has seated.

5. A flushing valve including a reservoir having an inlet and an outlet, a vertically movable piston in said reservoir above the inlet, a valve controlling said outlet and affording passage through said valve when seated to permit water to flow through the valve to the outlet, said valve being suspended from said piston and subject to the suction of the water flowing from the inlet to the outlet when said valve is raised for drawing down the valve and piston, and means to close said passage in the valve with the descent of the piston.

6. A flushing valve including a main reservoir having an inlet and an outlet, a separate cylinder accommodated in said reservoir and seating on a member appurtenant thereto, an auxiliary reservoir on the cylinder and serving to hold the latter to its seat, a cap on the main reservoir above said auxiliary reservoir, a piston in said cylinder, and a valve carried by said piston and controlling said outlet.

7. A flushing valve including a reservoir having an inlet and an outlet, a cylinder in said reservoir, the lower portion of said cylinder being presented at said inlet and there being a space below the cylinder for the flow of water to the outlet, said cylinder being bevelled at its lower edge, the body of the valve at the interior below said bevelled edge, flaring upwardly and said bevelled edge terminating adjacent to the plane of and radially inward of said flaring portion of the body to determine the direction of the flushing water toward the outlet and to prevent side pressure.

8. A flushing valve including a reservoir having an inlet and an outlet, a cylinder in said reservoir, the lower portion of said cylinder being presented at said inlet and there being a space below the cylinder for the flow of water to the outlet, said cylinder having an annular series of flutes at the lower end thereof.

9. A flushing valve including a reservoir having an inlet and an outlet, a cylinder in said reservoir, the lower portion of said cylinder being presented at said inlet and there being a space below the cylinder for the flow of water to the outlet, said cylinder having an annular series of flutes at the lower end thereof, there being a flared portion within the body directly below the flutes of the cylinder.

10. A flushing valve including a reservoir having an inlet and an outlet, a cylinder in said reservoir, the lower portion of said cylinder being presented at said inlet and there being a space below the cylinder for the flow of water to the outlet, said cylinder being bevelled at its lower edge, said bevelled portion of the cylinder being fluted.

WILLIAM SEARS WHITE.