Feb. 5, 1957 W. E. FINNEY ET AL 2,780,005

GAUGE FOR ROTOR THREAD PROFILE

Filed Feb. 23, 1955 2 Sheets-Sheet 1

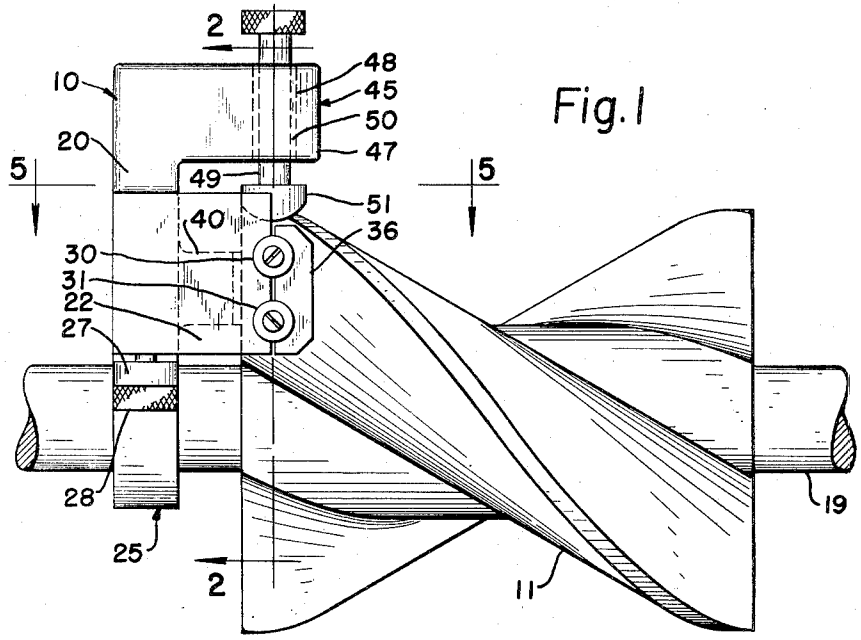


Fig. 1

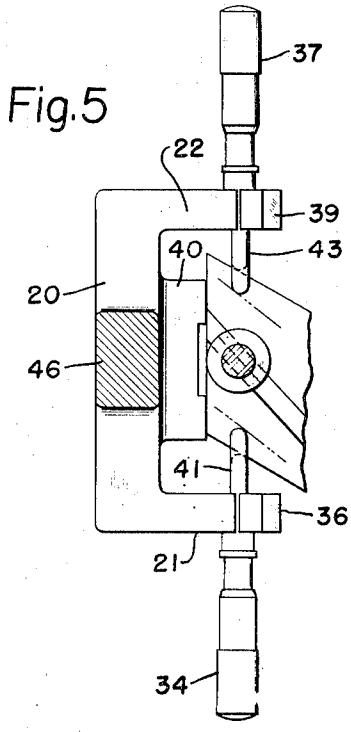


Fig. 5

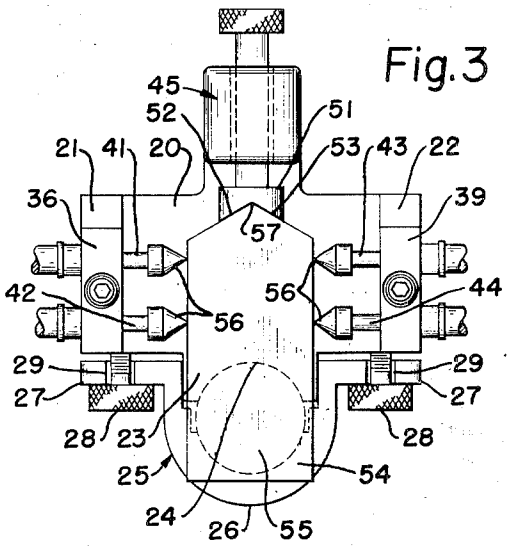


Fig. 3

INVENTOR.
William E. Finney
BY Norris H. Whisler
Otto Miller
Attorney

Feb. 5, 1957 W. E. FINNEY ET AL 2,780,005

GAUGE FOR ROTOR THREAD PROFILE

Filed Feb. 23, 1955 2 Sheets-Sheet 2

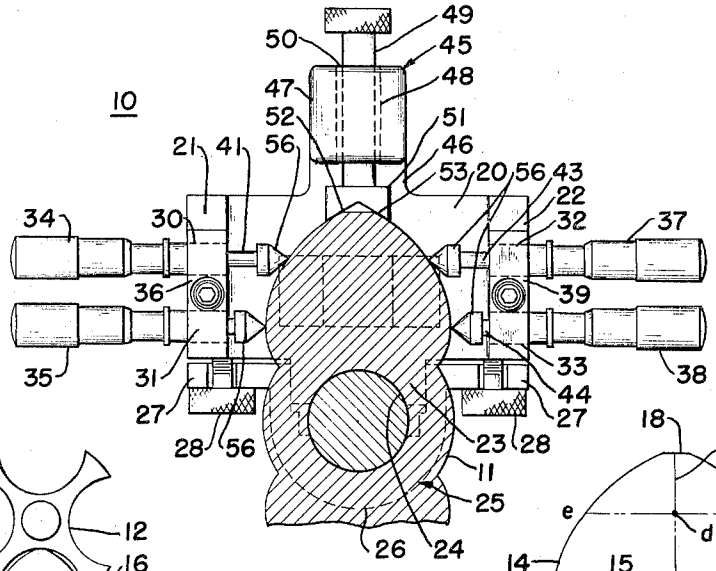


Fig. 2

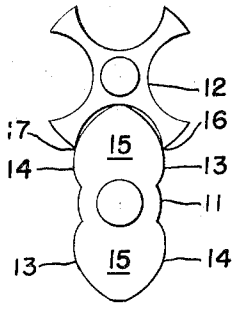


Fig. 6

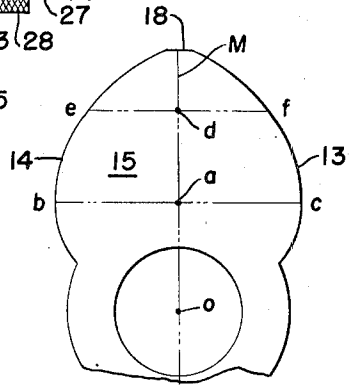


Fig. 7

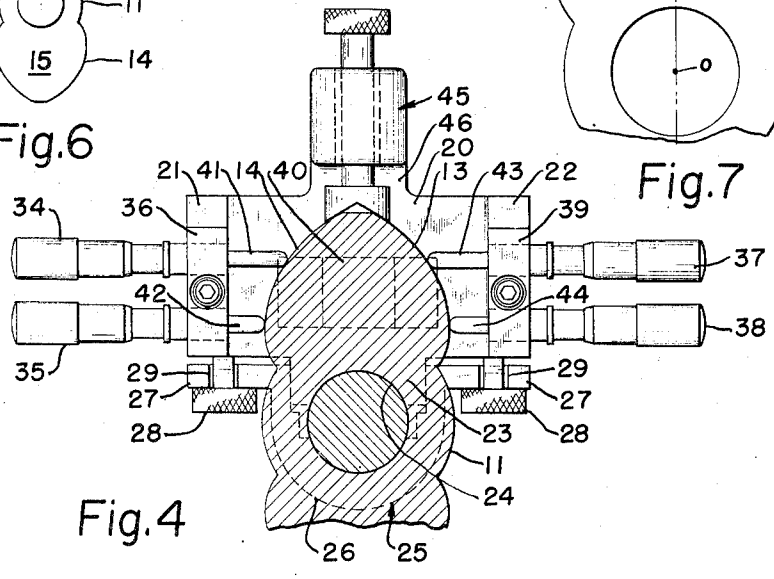


Fig. 4

*INVENTOR.*
William E. Finney
BY Norris H. Whisler
Otto Moeller
Attorney

United States Patent Office 2,780,005 Patented Feb. 5, 1957



2,780,005

# GAUGE FOR ROTOR THREAD PROFILE

William E. Finney and Norris H. Whisler, York, Pa., assignors, by mesne assignments, to Capitol Products Corporation, Mechanicsburg, Pa., a corporation of Pennsylvania

Application February 23, 1955, Serial No. 489,869

6 Claims. (Cl. 33—174)

This invention relates to gauges and particularly to a gauge for checking the accuracy of the male rotor of an axial flow fluid device of the type provided with a pair of rotatably mounted rotors provided with complementary intermeshing helical threads preferably of such configuration to provide a continuous seal line therebetween and which cooperate with the walls of the chambers in which they rotate to form fluid pockets that advance from one end of the chambers to the other.

In devices of the type described, the smallest practical clearance is provided between the intermeshing rotors and between them and the casing, so as to reduce to a minimum the leakage of fluid from the fluid pockets. In order to provide such a minimum practical clearance, the flanks of the rotors must be machined with utmost precision and it is an object of this invention to provide a gauge for readily determining the accuracy of the flanks of the male rotor.

Another object is to provide a gauge which is easy to operate and which will give a direct reading of the deviation of the flank of the rotor from its theoretically correct contour.

A further object is to provide a gauge that is readily applied to the rotor while the latter is disposed on the work arbor of the cutting machine and will give an accurate measure for setting or resetting the cutting tools for accurately cutting the rotor flanks.

A still further object is to provide a gauge which when applied to the rotor thread is adapted to effect self centering of the rotor thread between the sensing terminals of the gauge whereby the contour of the opposite flanks of the rotor thread with respect to the median line bisecting the crest of the thread and extending through the axis of the rotor, are directly measured, whereby the deviation of the opposite flanks from the theoretically correct value is readily ascertainable and provides a measure for setting or resetting the cutting tools for cutting the respective flanks of the rotor thread.

Other objects and advantages reside in the construction of parts, the combination thereof and the mode of operation, as will become more apparent from the following description when taken in conjunction with the accompanying drawings.

In the drawings:

Figure 1 is a side elevation of a gauge embodying my invention showing the gauge mounted on the work arbor of the cutting machine and applied to the rotor being cut;

Figure 2 is a sectional view taken on the line 2—2 of Figure 1;

Figure 3 is a front elevational view of the gauge showing a gauge block applied thereto for presetting the micrometers of the gauge;

Figure 4 is a view similar to the view shown in Figure 2, but with the sharp sensing thimbles of the micrometers removed;

Figure 5 is a sectional view taken on the line 5—5 of Figure 1, showing the rounded sensing terminals of the



micrometers in engagement with the rotor thread flanks;

Figure 6 is an end view of a rootr of the type to which the gauge is applicable, the rotor being shown in mesh with its complementary rotor; and

Figure 7 is an enlarged end view of the thread of a rotor to which the gauge is applicable.

In the drawings the gauge 10 is depicted for purpose of illustration as applied to the main or male rotor 11 of an axial flow positive displacement blower. A blower having incorporated therein a rotor such as rotor 11 is disclosed and described in J. E. Whitfield Patent No. 2,287,716, granted June 23, 1942, and since the blower does not constitute any part of the present invention, it is not shown.

Such axial flow positive displacement blower is provided with complementary intermeshing rotary screw members commonly referred to as the main or male rotor, such as the rotor 11, and the gate or female rotor, such as the rotor 12 shown in Fig. 6, the former generally having fully addendum threads, the flanks of which have profiles of convex curvature and the latter fully dedendum threads, the flanks of which have profiles of concave curvature.

The thread form of the rotor 11, to which the gauge 10 is shown applied in the drawings, is of the fully generated symmetrical type. In other words, the flanks 13 and 14 of rotor thread 15 are generated respectively by the intersections of the flanks of the thread of the gate rotor 12 with the periphery or pitch circle thereof, thus referring to Fig. 6, the flank 13 of rotor thread 15 is described by the crest edge 16 of the gate rotor 12 and the flank 14 is described by the crest edge 17. The flanks 13 and 14 of rotor thread 15 in any cross section through the rotor 11 perpendicular to the axis thereof, are equidistant from a median line M bisecting the crest 18 of the rotor thread 15 and extending through the axis of the rotor 11, as shown in Figure 7.

With the following information: pitch diameter—gate rotor 12; outside diameter—gate rotor 12; pitch diameter—main rotor 11; outside diameter—main rotor 11; intermeshing clearance between rotors 11 and 12; crest dimension—crest 18 of main rotor 11; center distance—between rotors 11 and 12; the formula of the flank curvature can be mathematically derived, by means of which the theoretical perpendicular distance from any point on the curves of the main rotor flanks to the median line M measured in a plane normal to the axis of rotation of the rotor can be determined.

Referring particularly to Fig. 7, taking an arbitrary distance *oa* from the axis of the rotor along the median line M, the dimensions *ab* and *ac* for a theoretically perfect rotor can be mathematically determined, and similarly taking an arbitrary distance *od*, the dimensions *de* and *df* for a theoretically perfect rotor can be mathematically determined.

The gauge, hereinafter described, is applied to a machined rotor, also as hereinafter described, to determine if the machined rotor is true within the permitted tolerances. The gauge registers a direct reading of the dimensions *ab* and *ac*, and the dimensions *de* and *df* of the opposite flanks of the machined rotor which, upon comparison with the theoretically correct value of these dimensions, will determine if the rotor has been accurately machined. If the readings reveal that insufficient stock has been removed, they provide a measure for proper setting of the cutting tools for removing such excess stock. The blanks for such rotors are cast oversize to the approximate shape of the rotor and it is customary to first take a rough cut followed by a finishing cut. After the rough cut has been taken, the gauge may be applied to the rotor and from the readings the proper

setting of the tools may be determined for accurate cutting of the rotor by the finish cut.

It is to be noted that in the case of the rotor above described two reference points are employed on each flank of the rotor. Since the flanks are simple generated curves, if the readings taken at these two points on each flank are, theoretically correct within the permitted tolerances, then all other points on the rotor flanks should be correct. It is apparent, however, that any number of reference points may be employed.

In Figure 1, the rotor **11**, which has been machined or partly machined, is shown on the work arbor **19** of a suitable machine for cutting the rotor **11**, and since the particular machine employed for cutting the rotor forms no part of the present invention, only the work arbor **19** is shown. The gauge **10**, which as shown in Figure 1 is mounted on the arbor **19** in position for gauging the rotor **11**, will now be described in detail.

The gauge **10** includes a preferably rectangular wall **20** having substantial thickness to provide rigidity. Micrometer supporting wing members **21**, **22**, perpendicular to the plane of the wall **20**, extend from the respective marginal side edges of the wall **20** and are preferably formed integral therewith. A square shouldered lug **23**, also preferably formed integral with the wall **20**, depends from the base of the wall **20** centrally between the sides thereof. The lower or free edge of the lug **23** is provided with a circular recess **24** adapted to closely fit the arbor **19** when the gauge **10** is mounted on the arbor **19**. The guage **10** is secured on the arbor **19** by a clamp **25** having a generally U-shaped frame **26** with integrally formed outwardly extending flanges **27** at the upper ends of the U. The upper inner wall portions of the U-shaped frame **26** are straight to receive and closely fit the square shouldered lug **23**, while the lower inner wall portion is arcuately formed to closely fit the arbor **19**. By means of thumb screws **28** extending through openings **29** in the flanges **27** and threaded into the base of the wall **20**, the gauge **10** can be secured on the arbor **19** in any one of a number of positions axially therealong and radially thereabout.

The end faces of the wings **21** and **22** are each provided with an upper and lower groove so disposed that when the gauge is properly positioned with respect to the rotor **11**, as will be hereinafter explained, the projected axes of upper groove **30** and lower groove **31** of wing **21** will extend through points *e* and *b*, respectively, and the projected axes of upper groove **32** and lower groove **33** of wing **22** will extend through points *f* and *c*. Micrometers **34** and **35** are mounted in respective grooves **30** and **31**, and are releasably secured therein by means of clamp **36** bolted to the grooved end face of wing **21**. Similarly, micrometers **37** and **38** are mounted in respective grooves **32** and **33**, and are releasably secured therein by means of clamp **39** bolted to the grooved end face of wing **22**.

A preferably integrally formed boss **40** extends outwardly from the plane of the wall **20** centrally between the wings **21** and **22** but is of less extent than the wings **21** and **22**. The boss **40** is arranged to abut the end face of the rotor **11** to properly orient the gauge **10** axially with respect to the rotor **11**, so that the work sensing terminals of the micrometers will engage the flanks **13** and **14** of rotor thread **15** a predetermined distance inward from the end face of the rotor **11**, as best shown in Figure 5.

As previously stated, the gauge **10** measures the distances from selected points *a* and *d* on the median line M of the rotor thread to the points *b*, *c* and *e*, *f*, respectively on the flanks of the rotors. Since the micrometers **34**, **35**, **37** and **38**, on which these distances are read, are carried by the gauge **10**, it is apparent that the rotor thread being measured must be accurately located or centered with respect to the gauge so that the extended axes of the micrometer spindles **41**, **42**, **43** and **44** will intersect the theoretically correct points *e*, *b*, *f* and *c*, respectively, of a perfect rotor thread, which points as previously stated, are known calculated distances from the points *d* and *e* on the median line M of the rotor thread.

In order to so properly position the gauge with respect to the rotor thread, the gauge is provided with centering means **45** which includes a lug **46** projecting from the top of the wall **20** midway between the sides thereof. The lug **46** has formed therewith an overhanging block **47** projecting from the upper portion thereof in the same direction with respect to the plane of the wall **20** as the wing members **21**, **22**. The overhanging block **47** is provided with a bore **48**, the extended axis of which will intersect the axis of the arbor **19** when the gauge is mounted on the arbor **19**, and which extended axis will also lie in a common plane with the axes of the spindles **41**, **42**, **43**, **44** of the micrometers **34**, **35**, **37**, **38**. A stem **49** has a sliding fit in a bushing **50** in bore **48**, it being understood that the axis of stem **49** coincides with the axis of the bore **48**. On the lower end of stem **49** is a preferably integrally formed centering block **51** provided with a pair of intersecting plane surfaces **52** and **53** disposed at an obtuse angle with respect to one another, and forming a shallow dihedral the apex of which intersects the axis of stem **49**. The plane surfaces **52** and **53** are adapted preferably to tangentially contact the respective flanks of rotor thread **15** closely adjacent the crest of the rotor thread, though if desired they may contact the crest edges of the rotor thread.

The centering means **45**, as described above, thus provides means for accurately positioning the gauge **10** with respect to the rotor thread **15**. As previously explained, the gauge **10** is secured on the arbor **19** by means of the clamp **25**. Now by loosening the thumb screws **28**, the gauge **10** can be rotatably adjusted about the axis of arbor **19** to a position in which the surfaces **52** and **53** of centering block **51** tangentially contact the respective flanks of the rotor thread **15** closely adjacent the crest thereof, after which the gauge can be secured in position by tightening the thumb screws **28**. The stem **49** of centering means **45** having a slidable fit in the bushing **50**, is also adapted to turn therein about its axis so that the centering block **51** will turn to accommodate itself to the helix angle of the rotor thread.

As previously brought out, the relative axial disposition of the gauge **10** with respect to the rotor **11** is fixed by abutment of the boss **40** of gauge **10** against the end face of the rotor. Preferably the relative extent of the boss **40**, the micrometer supporting wing members **21**, **22**, and the centering means **45**, from the wall **20** of the gauge, is such that the sensing terminals of the micrometers engage the rotor thread about one-half inch inwardly from the end face of the rotor; however if desired the extent of these elements can be such that the sensing terminals of the micrometers may engage the rotor thread at any desired distance from the end face of the rotor.

Where, as generally is the case, the distances *de*, *df*, *ab*, and *ac*, from the median line M to the flanks of the rotor thread are greater than the micrometer scales, the micrometers **34**, **35**, **37** and **38** are set to zero reading against a symmetrical gauge block **54**, as shown in Fig. 3. The block **54** has a cylindrical lug **55** projecting outwardly from the lower portion thereof simulating the arbor **19** and arranged to be clamped in the circular recess **24** of the gauge **10**. The upper end of the gauge block **54** is inverted V-shaped, the apex **57** being arranged to be received in the centering block **51** of the centering means **45**. As previously stated, gauge block **54** is symmetrical, that is, it is symmetrical with respect to a plane extending through the axis of the gauge block lug **55** and the apex **57** of the gauge block, with the sides of the gauge block being equidistant from this plane.

With the gauge block **54** centered in the gauge **10**, the micrometers are adjusted to zero reading with their sensing terminals engaging the sides of the gauge block, and are clamped in position by means of clamps **36** and **39**. After now removing the gauge block **54**, the gauge may be applied to the arbor **19** and rotor **11** as pre-

viously described. The micrometer readings are now taken with the sensing terminals contacting the flanks of the rotor thread. These readings plus one half the known width of the gauge block **54** give a direct value of the dimensions of the rotor flank measured from the median line M. By comparing these values with the theoretical values *de, df, ab* and *ac* of a perfect rotor thread, the deviation of the flanks of the rotor thread being measured from the mathematically calculated value is readily determined.

If the rotor threads are cut by a turning operation with the feed axially of the rotor, the gauge may be applied to the rotor after the cutting operation has proceeded about a half inch axially of the rotor. Should the gauge reveal that one or both flanks are still oversize, the micrometer readings provide a measure for resetting the cutting tools to accurately cut the rotors. Of course, where the rotors are cut by a planing operation, as disclosed in J. E. Whitfield Patent No. 2,473,233, granted June 14, 1949, the gauge may be used in checking a completed rotor.

While the gauge has been described above as applied to a rotor, wherein the formula of the flank curvature can be mathematically derived, it can also be applied to rotors wherein the formula of the flank curvature cannot be practically derived mathematically. In such cases a perfect rotor may be fashioned by trial and error and when obtained certain reference points on the flanks may be determined by actual measurement and used in designing the gauge with reference to those points.

In Figure 2 the sensing terminals of the micrometers are shown as removable conical thimbles **56** having sharp sensing points disposed on the axes of the micrometer spindles. Because of wearing of these sensing points it is not practicable to use them when gauging rotors on a production basis. For day after day gauging of rotors these thimbles **56** are removed and the measurements are taken with the rounded sensing terminals of the micrometer spindles. The rounded sensing terminals obviously will not contact the rotor flanks at exactly the points *b, c, e* and *f* as will the sharp sensing points of the thimbles **56**. This is due to the helix of the rotor thread and the curve of the rotor thread flank.

In actual practice, therefore, the thimbles **56** are used in obtaining measurements of a perfect rotor thread, and when obtained, the micrometer readings for such perfect rotor thread are taken. The same rotor is then measured with the thimbles **56** removed, and the new readings are then used as reference figures for gauging all subsequent rotors as shown in Figures 4 and 5.

While a preferred embodiment of the invention has been described, it will be understood that various changes may be made in the form, details, proportion and arrangement of parts, the combination thereof and mode of operation, without departing from the scope of the invention.

We claim:

1. Means for measuring the deviation of the flank profiles of the thread of a helical rotor from a known desired profile, a shaft on which the rotor is adapted to be mounted, a gauge having a body, the base of said body having means for mounting said gauge on said shaft in axially spaced relation with respect to said rotor for rotary movement about the axis of said shaft, spaced wings extending from the respective sides of said body straddling the flanks of a rotor thread, micrometers supported by said wings and extending toward each other to engage the respective flanks of said rotor thread, a support member carried by the top of said gauge body overhanging the end of said rotor thread, a stem slidably and rotatably mounted in a bore in said support member, and an inverted V-block carried by the lower end of said stem for engagement with said rotor thread at its crest for rotatively positioning the gauge in predetermined relation with respect to said rotor thread.

2. A construction as defined in claim 1 in which the micrometers are so disposed in said supporting wings that the extended axes thereof intersect the flanks of a rotor thread of known desired profile at points lying in a common plane normal to the axis of the rotor.

3. A construction as defined in claim 2 in which the axis of the V-block supporting stem lies in said common plane.

4. A construction as defined in claim 1 in which the extended axis of the V-block stem intersects the extended axis of rotation of said gauge about said shaft.

5. A gauge for measuring the deviation of the flank profiles of the thread of a helical rotor from a known desired profile, said gauge including a body portion, the base of said body portion having means for supporting said gauge on a shaft for annular adjustment thereabout including clamping means for securing said gauge in adjusted position, spaced wings extending forwardly from the respective sides of said body portion adapted to straddle a helical thread of a rotor mounted on said shaft in axial spaced relation with respect to said gauge, micrometers supported by said wings adapted to engage the flanks of said rotor thread, and means for centering said gauge in adjusted position with respect to the rotor thread including a support member extending forwardly from the top of said body portion and an inverted V-block carried by said support and being movable with respect thereto for engaging said helical rotor thread at its crest to orient said gauge in adjusted position.

6. A gauge for measuring the deviation of the flank profiles of the thread of a helical rotor from a known desired profile, said gauge including a body portion, the base of said body portion having means for supporting said gauge on a shaft for rotary adjustment thereabout, spaced wings extending from respective sides of said body portion adapted to straddle a helical thread of a rotor mounted on said shaft in axial spaced relation with respect to said gauge, micrometers supported by said wings in position for adjusting the sensing terminals thereof to engage the flanks of said rotor thread, means for centering the gauge with respect to the rotor thread including a centering block, a support member therefor carried by the top of said body portion for movably supporting said centering block over the crest of said rotor thread, said centering block having a shallow dihedral on one side thereof, the respective sides of which are adapted to tangentially engage the upper ends of the rotor thread flanks whereby to adjust said gauge about said shaft in fixed relation with respect to a median line of said rotor thread which bisects the crest of said thread and extends through the axis of said shaft.

**References Cited** in the file of this patent

UNITED STATES PATENTS

| | | |
|---|---|---|
| 764,203 | Perkins | July 5, 1904 |
| 2,707,321 | Breisch | May 3, 1955 |

FOREIGN PATENTS

| | | |
|---|---|---|
| 875,344 | France | Sept. 16, 1942 |