(12) INTERNATIONAL APPLICATION PUBLISHED UNDER THE PATENT COOPERATION TREATY (PCT)

(19) World Intellectual Property Organization
International Bureau

(43) International Publication Date
23 October 2014 (23.10.2014)

WIPO | PCT

(10) International Publication Number
WO 2014/172403 A1

(51) International Patent Classification:
G06F 3/02 (2006.01)

(21) International Application Number:
PCT/US2014/034266

(22) International Filing Date:
16 April 2014 (16.04.2014)

(25) Filing Language: English

(26) Publication Language: English

(30) Priority Data:

61/814,013	19 April 2013 (19.04.2013)	US
61/839,048	25 June 2013 (25.06.2013)	US
14/171,080	3 February 2014 (03.02.2014)	US

(71) Applicant: **SYNAPTICS INCORPORATED** [US/US]; 1251 McKay Drive, San Jose, California 95131 (US).

(72) Inventors: **KRUMPELMAN, Doug**; 1745 Tilford Lane, Coeur d'Alene, Idaho 83814 (US). **WEBER, Chris**; 1745 Tilford Lane, Coeur d'Alene, Idaho 83814 (US). **TAN, Yeh-Cheng**; 7F., No. 501, Sec. 2, Tiding Blvd., Neihu Dist., Taipei City, 114 (TW).

(74) Agents: **BERRY, Thomas G.** et al.; Ingrassia Fisher & Lorenz P.C., 7010 E. Cochise Road, Scottsdale, Arizona 85253 (US).

(81) Designated States *(unless otherwise indicated, for every kind of national protection available)*: AE, AG, AL, AM, AO, AT, AU, AZ, BA, BB, BG, BH, BN, BR, BW, BY, BZ, CA, CH, CL, CN, CO, CR, CU, CZ, DE, DK, DM, DO, DZ, EC, EE, EG, ES, FI, GB, GD, GE, GH, GM, GT, HN, HR, HU, ID, IL, IN, IR, IS, JP, KE, KG, KN, KP, KR, KZ, LA, LC, LK, LR, LS, LT, LU, LY, MA, MD, ME, MG, MK, MN, MW, MX, MY, MZ, NA, NG, NI, NO, NZ, OM, PA, PE, PG, PH, PL, PT, QA, RO, RS, RU, RW, SA, SC, SD, SE, SG, SK, SL, SM, ST, SV, SY, TH, TJ, TM, TN, TR, TT, TZ, UA, UG, US, UZ, VC, VN, ZA, ZM, ZW.

(84) Designated States *(unless otherwise indicated, for every kind of regional protection available)*: ARIPO (BW, GH, GM, KE, LR, LS, MW, MZ, NA, RW, SD, SL, SZ, TZ, UG, ZM, ZW), Eurasian (AM, AZ, BY, KG, KZ, RU, TJ, TM), European (AL, AT, BE, BG, CH, CY, CZ, DE, DK, EE, ES, FI, FR, GB, GR, HR, HU, IE, IS, IT, LT, LU, LV, MC, MK, MT, NL, NO, PL, PT, RO, RS, SE, SI, SK, SM, TR), OAPI (BF, BJ, CF, CG, CI, CM, GA, GN, GQ, GW, KM, ML, MR, NE, SN, TD, TG).

Published:

— *with international search report (Art. 21(3))*

(54) Title: RETRACTABLE KEYBOARD KEYS

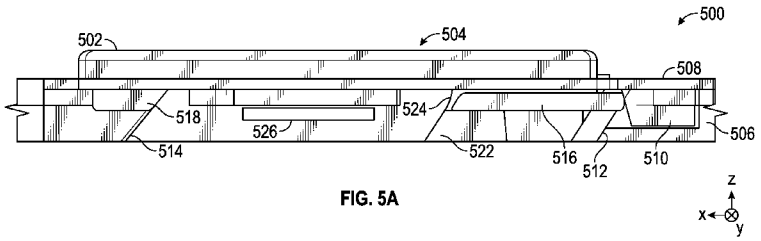

FIG. 5A

(57) Abstract: A keyboard includes a bezel having a plurality of key openings and a plurality of key holding features configured adjacent to the plurality of key openings on a bottom side of the bezel. A plurality of keycaps are positioned within the plurality of key openings. A chassis is included that has a plurality of planar-translation effecting mechanisms each supporting a respective one of the plurality of keycaps to guide the respective keycap in a press direction and a second direction as the keycap moves from the unpressed position toward the pressed position. The keypad or keyboard includes a key retraction mechanism configured to move the chassis relative to the bezel wherein the key holding features of the bezel limit movement of the keycaps in the second direction during movement of the chassis relative to the bezel, while the planar-translation effecting mechanisms move the plurality of keycaps toward a retracted position.

WO 2014/172403 A1

RETRACTABLE KEYBOARD KEYS

RELATED APPLICATION(S)

[0001] This application claims priority to U.S. Non-Provisional Patent Application No. 14/171,080 filed February 3, 2014, which claims priority to U.S. Provisional Patent Application No. 61/839,048 filed June 25, 2013 and to U.S. Provisional Patent Application No. 61/814,013 filed April 19, 2013.

FIELD OF THE INVENTION

[0002] This invention generally relates to electronic devices.

BACKGROUND OF THE INVENTION

[0003] Pressable touchsurfaces (touch surfaces which can be pressed) are widely used in a variety of input devices, including as the surfaces of keys or buttons for keypads or keyboards, and as the surfaces of touch pads or touch screens. It is desirable to improve the usability of these input systems.

[0004] Fig. 2 shows a graph 200 of an example tactile response curve associated with the "snapover" haptic response found in many keys enabled with metal snap domes or rubber domes. Specifically, graph 200 relates force applied to the user by a touchsurface of the key and the amount of key displacement (movement relative to its unpressed position). The force applied to the user may be a total force or the portion of the total force along a particular direction such as the positive or negative press direction. Similarly, the amount of key displacement may be a total amount of key travel or the portion along a particular direction such as the positive or negative press direction.

[0005] The force curve 210 shows four key press states 212, 214, 216, 218 symbolized with depictions of four rubber domes at varying amounts of key displacement. The key is in the "unpressed" state 212 when no press force is applied to the key and the key is in the unpressed position (i.e., "ready" position). In response to press input, the key initially responds with some key displacement and increasing reaction force applied to the user. The reaction force increases with the amount of key displacement until it reaches a local maximum "peak force" F_1 in the "peak" state 214. In the peak state 214, the metal snap dome is about to snap or the rubber dome is about to collapse. The key is in the "contact" state 216 when the keycap, snap dome or rubber dome, or other key component moved with the keycap makes initial physical contact with the base of the key (or a component attached to the base) with the local minimum "contact force" F_2. The key is in the "bottom" state 218 when the key has travelled past the "contact" state and is mechanically bottoming out, such as by compressing the rubber dome in keys enabled by rubber domes.

[0006] A snapover response is defined by the shape of the reaction force curve – affected by variables such as the rate of change, where it peaks and troughs, and the associated magnitudes. The difference between the peak force F_1 and the contact force F_2 can be termed the "snap." The "snap ratio" can be determined as $(F_1-F_2)/F_1$ (or as $100*(F_1-F_2)/F_1$, if a percent-type measure is desired).

BRIEF SUMMARY OF THE INVENTION

[0007] Retractable key assemblies for keypads and keyboards are disclosed. A keypad or keyboard includes a bezel having a plurality of key openings and a plurality of key holding features configured adjacent to the plurality of key openings on a bottom side of the bezel. A plurality of keycaps are positioned within the plurality of key openings. Each keycap has a touch surface for receiving a press force that moves the keycap from an unpressed position

toward a pressed position, the unpressed position and pressed position being separated in a press direction and a second direction orthogonal to the press direction. A chassis is included that has a plurality of planar-translation effecting mechanisms each supporting a respective one of the plurality of keycaps to guide the respective keycap in the press direction and the second direction as the keycap moves from the unpressed position toward the pressed position. The keypad or keyboard includes a key retraction mechanism configured to move the chassis relative to the bezel wherein the key holding features of the bezel limit movement of the keycaps in the second direction during movement of the chassis relative to the bezel, while the planar-translation effecting mechanisms move the plurality of keycaps toward a retracted position.

BRIEF DESCRIPTION OF DRAWINGS

[0008] Example embodiments of the present invention will hereinafter be described in conjunction with the appended drawings which are not to scale unless otherwise noted, where like designations denote like elements, and:

[0009] FIG. 1 shows an example keyboard that incorporates one or more implementations of key-based touchsurfaces configured in accordance with the techniques described herein;

[0010] FIG. 2 is a graph of an example tactile response that is characteristic of many keys enabled with metal snap domes or rubber domes;

[0011] FIGS. 3 A-B are simplified side views of a first example touchsurface assembly configured in accordance with the techniques described herein;

[0012] FIG. 4 shows an exploded view of an example keyboard in accordance with the techniques described herein

[0013] FIGS. 5 A-B are cross-sectional side views of a key assembly in accordance with an embodiment;

[0014] FIGS. 6 A-C are side views of an exemplary laptop computer in accordance with an embodiment;

[0015] FIGS. 7 A-D are perspective views of an exemplary key retraction mechanisms in accordance with an embodiment;

[0016] FIGS. 8 A-B are side views of an exemplary four-bar key retraction mechanism in accordance with an embodiment; and

[0017] FIGS. 9 A-B are side views of an exemplary four-bar key retraction mechanism in accordance with an embodiment.

DETAILED DESCRIPTION OF THE INVENTION

[0018] The following detailed description is merely exemplary in nature and is not intended to limit the invention or the application and uses of the invention.

[0019] Various embodiments of the present invention provide input devices and methods that facilitate improved usability, thinner devices, easier assembly, lower cost, more flexible industrial design, or a combination thereof. These input devices and methods involve pressable touchsurfaces that may be incorporated in any number of devices. As some examples, pressable touchsurfaces may be implemented as surfaces of touchpads, touchscreens, keys, buttons, and the surfaces of any other appropriate input device. Thus, some non-limiting examples of devices that may incorporate pressable touchsurfaces include personal computers of all sizes and shapes, such as desktop computers, laptop computers, netbooks, ultrabooks, tablets, e-book readers, personal digital assistants (PDAs), and cellular phones including smart phones. Additional example devices include data input devices (including remote controls, integrated keyboards or keypads such as those within portable computers, or peripheral keyboards or keypads such as those found in tablet covers or stand-alone keyboards, control panels, and computer mice), and data output devices (including

display screens and printers). Other examples include remote terminals, kiosks, point-of-sale devices, video game machines (e.g., video game consoles, portable gaming devices, and the like) and media devices (including recorders, editors, and players such as televisions, set-top boxes, music players, digital photo frames, and digital cameras).

[0020] The discussion herein focuses largely on rectangular touchsurfaces. However, the touchsurfaces for many embodiments can comprise other shapes. Example shapes include triangles, quadrilaterals, pentagons, polygons with other numbers of sides, shapes similar to polygons with rounded corners or nonlinear sides, shapes with curves, elongated or circular ellipses circles, combinations shapes with portions of any of the above shapes, non-planar shapes with concave or convex features, and any other appropriate shape.

[0021] In addition, although the discussion herein focuses largely on the touchsurfaces as being atop rigid bodies that undergo rigid body motion, some embodiments may comprise touchsurfaces atop pliant bodies that deform. "Rigid body motion" is used herein to indicate motion dominated by translation or rotation of the entire body, where the deformation of the body is negligible. Thus, the change in distance between any two given points of the touchsurface is much smaller than an associated amount of translation or rotation of the body.

[0022] Also, in various implementations, pressable touchsurfaces may comprise opaque portions that block light passage, translucent or transparent portions that allow light passage, or both.

[0023] Fig. 1 shows an example keyboard 100 that incorporates a plurality of (two or more) pressable key-based touchsurfaces configured in accordance with the techniques described herein. The example keyboard 100 comprises rows of keys 120 of varying sizes surrounded by a keyboard bezel 130. Keyboard 100 has a QWERTY layout, even though the keys 120 are not thus labeled in Fig. 1. Other keyboard embodiments may comprise different physical key shapes, key sizes, key locations or orientations, or different key layouts such as

DVORAK layouts or layouts designed for use with special applications or non-English languages. In some embodiments, the keys 120 comprise keycaps that are rigid bodies, such as rigid rectangular bodies having greater width and breadth than depth (depth being in the Z direction as explained below). Also, other keyboard embodiments may comprise a single pressable key-based touchsurface configured in accordance with the techniques described herein, such that the other keys of these other keyboard embodiments are configured with other techniques.

[0024] Orientation terminology is introduced here in connection with Fig. 1, but is generally applicable to the other discussions herein and the other figures unless noted otherwise. This terminology introduction also includes directions associated with an arbitrary Cartesian coordinate system. The arrows 110 indicate the positive directions of the Cartesian coordinate system, but do not indicate an origin for the coordinate system. Definition of the origin will not be needed to appreciate the technology discussed herein.

[0025] The face of keyboard 100 including the exposed touchsurfaces configured to be pressed by users is referred to as the "top" 102 of the keyboard 100 herein. Using the Cartesian coordinate directions indicated by the arrows 110, the top 102 of the keyboard 100 is in the positive-Z direction relative to the bottom 103 of the keyboard 100. The part of the keyboard 100 that is typically closer to the body of a user when the keyboard 100 is in use atop a table top is referred to as the "front" 104 of the keyboard 100. In a QWERTY layout, the front 104 of the keyboard 100 is closer to the space bar and further from the alphanumeric keys. Using the Cartesian coordinate directions indicated by the arrows 110, the front 104 of the keyboard 100 is in the positive-X direction relative to the back 105 of the keyboard 100. In a typical use orientation where the top 102 of the keyboard 100 is facing upwards and the front 104 of the keyboard 100 is facing towards the user, the "right side" 106 of the keyboard 100 is to the right of a user. Using the Cartesian coordinate directions indicated by the

arrows 110, the right side 106 of the keyboard 100 is in the positive-Y direction relative to the "left side" 107 of the keyboard 100. With the top 102, front 104, and right side 106 thus defined, the "bottom" 103, "back" 105, and "left side" 107 of the keyboard 100 are also defined.

[0026] Using this terminology, the press direction for the keyboard 100 is in the negative-Z direction, or vertically downwards toward the bottom of the keyboard 100. The X and Y directions are orthogonal to each other and to the press direction. Combinations of the X and Y directions can define an infinite number of additional lateral directions orthogonal to the press direction. Thus, example lateral directions include the X direction (positive and negative), the Y direction (positive and negative), and combination lateral directions with components in both the X and Y directions but not the Z direction. Motion components in any of these lateral directions is sometimes referred herein as "planar," since such lateral motion components can be considered to be in a plane orthogonal to the press direction.

[0027] Some or all of the keys of the keyboard 100 are configured to move between respective unpressed and pressed positions that are spaced in the press direction and in a lateral direction orthogonal to the press direction. That is, the touchsurfaces of these keys exhibit motion having components in the negative Z-direction and in a lateral direction. In the examples described herein, the lateral component is usually in the positive X-direction or in the negative X-direction for ease of understanding. However, in various embodiments, and with reorientation of select key elements as appropriate, the lateral separation between the unpressed and the pressed positions may be solely in the positive or negative X-direction, solely in the positive or negative Y-direction, or in a combination with components in both the X and Y directions.

[0028] Thus, these keys of the keyboard 100 can be described as exhibiting "diagonal" motion from the unpressed to the pressed position. This diagonal motion is a motion

including both a "Z" (or vertical) translation component and a lateral (or planar) translation component. Since this planar translation occurs with the vertical travel of the touchsurface, it may be called "planar translational responsiveness to vertical travel" of the touchsurface, or "vertical-lateral travel."

[0029] Some embodiments of the keyboard 100 comprise keyboards with leveled keys that remain, when pressed during normal use, substantially level in orientation through their respective vertical-lateral travels. That is, the keycaps of these leveled keys (and thus the touchsurfaces of these keys) exhibit little or no rotation along any axes in response to presses that occur during normal use. Thus, there is little or no roll, pitch, and yaw of the keycap and the associated touchsurfaces remain relatively level and substantially in the same orientation during their motion from the unpressed position to the pressed position.

[0030] In various embodiments, the lateral motion associated with the vertical-lateral travel can improve the tactile feel of the key by increasing the total key travel for a given amount of vertical travel in the press direction. In various embodiments, the vertical-lateral travel also enhances tactile feel by imparting to users the perception that the touchsurface has travelled a larger vertical distance than actually travelled. For example, the lateral component of vertical-lateral travel may apply tangential friction forces to the skin of a finger pad in contact with the touchsurface, and cause deformation of the skin and finger pad that the user perceives as additional vertical travel. This then creates a tactile illusion of greater vertical travel. In some embodiments, returning the key from the pressed to the unpressed position on the return stroke also involves simulating greater vertical travel using lateral motion.

[0031] To enable the keys 120 of the keyboard 100 with vertical-lateral travel, the keys 120 are parts of key assemblies each comprising mechanisms for effecting planar translation, readying the key 120 by holding the associated keycap in the unpressed position, and

returning the key 120 to the unpressed position. Some embodiments further comprise mechanisms for leveling keycaps. Some embodiments achieve these functions with a separate mechanism for each function, while some embodiments achieve two or more of these functions using a same mechanism. For example, a "biasing" mechanism may provide the readying function, the returning function, or both the readying and returning functions. Mechanisms which provide both readying and returning functions are referred to herein as "ready/return" mechanisms. As another example, a leveling/planar-translation-effecting mechanisms may level and effect planar translation. As further examples, other combinations of functions may be provided by a same mechanism.

[0032] The keyboard 100 may use any appropriate technology for detecting presses of the keys of the keyboard 100. For example, the keyboard 100 may employ a key switch matrix based on conventional resistive membrane switch technology. The key switch matrix may be located under the keys 120 and configured to generate a signal to indicate a key press when a key 120 is pressed. Alternatively, the example keyboard 100 may employ other key press detection technology to detect any changes associated with the fine or gross change in position or motion of a key 120. Example key press detection technologies include various capacitive, resistive, inductive, magnetic, force or pressure, linear or angular strain or displacement, temperature, aural, ultrasonic, optical, and other suitable techniques. With many of these technologies, one or more preset or variable thresholds may be defined for identifying presses and releases.

[0033] As a specific example, capacitive sensor electrodes may be disposed under the touchsurfaces, and detect changes in capacitance resulting from changes in press states of touchsurfaces. The capacitive sensor electrodes may utilize "self capacitance" (or "absolute capacitance") sensing methods based on changes in the capacitive coupling between the sensor electrodes and the touchsurface. In some embodiments, the touchsurface is conductive

in part or in whole, or a conductive element is attached to the touchsurface, and held at a constant voltage such as system ground. A change in location of the touchsurface alters the electric field near the sensor electrodes below the touchsurface, thus changing the measured capacitive coupling. In one implementation, an absolute capacitance sensing method operates with a capacitive sensor electrode underlying a component having the touchsurface, modulates that sensor electrodes with respect to a reference voltage (e.g., system ground), and detects the capacitive coupling between that sensor electrode and the component having the touchsurface for gauging the press state of the touchsurface.

[0034] Some capacitive implementations utilize "mutual capacitance" (or "transcapacitance") sensing methods based on changes in the capacitive coupling between sensor electrodes. In various embodiments, the proximity of a touchsurface near the sensor electrodes alters the electric field between the sensor electrodes, thus changing the measured capacitive coupling. The touchsurface may be a conductive or non-conductive, electrically driven or floating, as long as its motion causes measurable change in the capacitive coupling between sensor electrodes. In some implementations, a transcapacitive sensing method operates by detecting the capacitive coupling between one or more transmitter sensor electrodes (also "transmitters") and one or more receiver sensor electrodes (also "receivers"). Transmitter sensor electrodes may be modulated relative to a reference voltage (e.g., system ground) to transmit transmitter signals. Receiver sensor electrodes may be held substantially constant relative to the reference voltage to facilitate receipt of resulting signals. A resulting signal may comprise effect(s) corresponding to one or more transmitter signals, and/or to one or more sources of environmental interference (e.g., other electromagnetic signals). Sensor electrodes may be dedicated transmitters or receivers, or may be configured to both transmit and receive.

[0035] In one implementation, a trans-capacitance sensing method operates with two capacitive sensor electrodes underlying a touchsurface, one transmitter and one receiver. The resulting signal received by the receiver is affected by the transmitter signal and the location of the touchsurface.

[0036] In some embodiments, the sensor system used to detect touchsurface presses may also detect pre-presses. For example, a capacitive sensor system may also be able to detect a user lightly touching a touchsurface, and distinguish that from the press of the touchsurface. Such a system can support multi-stage touchsurface input, which can respond differently to light touch and press.

[0037] Some embodiments are configured to gauge the amount of force being applied on the touchsurface from the effect that the force has on the sensor signals. That is, the amount of depression of the touchsurface is correlated with one or more particular sensor readings, such that the amount of press force can be determined from the sensor reading(s).

[0038] In some embodiments, substrates used for sensing are also used to provide backlighting associated with the touchsurfaces. As a specific example, in some embodiments utilizing capacitive sensors underlying the touchsurface, the capacitive sensor electrodes are disposed on a transparent or translucent circuit substrate such as polyethylene terephthalate (PET), another polymer, or glass. Some of those embodiments use the circuit substrate as part of a light guide system for backlighting symbols viewable through the touchsurfaces.

[0039] Fig. 1 also shows a section line A-A' relative to the key 122 of the keyboard 100, which will be discussed below.

[0040] The keyboard 100 may be integrated into or coupled to computer such as a laptop computer comprising one or more processing systems. The processing system(s) each comprise one or more ICs (integrated circuits) having appropriate processor-executable instructions for responding to key presses. These instructions direct the appropriate IC(s) to

operate keyboard sensors to determine if a key has been pressed (or the extent of the press), and provide an indication of press status to a main CPU of the laptop or a response to the press status to a user of the laptop.

[0041] While the orientation terminology, vertical-lateral travel, sensing technology, and implementation options discussed here focuses on the keyboard 100, these discussions are readily analogized to other touchsurfaces and devices described herein.

[0042] Various embodiments in accordance with the techniques described herein, including embodiments without metal snap domes or rubber domes, provide force response curves similar to the curve 210 of Fig. 2. Many tactile keyboard keys utilize snap ratios no less than 0.4 and no more than 0.6. Other tactile keyboard keys may use snap ratios outside of these ranges, such as no less than 0.3 and no more than 0.5, and no less than 0.5 and no more than 0.7.

[0043] Other embodiments provide other response curves having other shapes, including those with force and key travel relationships that are linear or nonlinear. Example nonlinear relationships include those which are piecewise linear, which contain linear and nonlinear sections, or which have constantly varying slopes. The force response curves may also be non-monotonic, monotonic, or strictly monotonic.

[0044] For example, the keys 120 made in accordance with the techniques described herein may be configured to provide the response shown by curve 210, or any appropriate response curve. The reaction force applied to a user may increase linearly or nonlinearly relative to an amount of total key travel, an amount of key travel the press direction, or an amount of key travel in a lateral direction. As a specific example, the force applied may increase with a constant slope relative to the amount of key travel for up to a first amount of force or key movement relative to its unpressed position, and then plateau (with constant force) or decrease for up to a second amount of force or key movement.

[0045] Figs. 3A-3B are simplified cross-sectional views of a first example touchsurface assembly. The key assembly 300 may be used to implement various keys, including the key 122 of the keyboard 100. In the embodiment where Figs. 3A-3B depict the key 122, these figures illustrate A-A' sectional views of the key 122. Fig. 3A shows the example key assembly 300 in an unpressed position and Fig. 3B shows the same key assembly 300 in a pressed position. The key assembly 300 may also be used in other devices utilizing keys, including keyboards other than the keyboard 100 and any other appropriate key-using device. Further, assemblies analogous to the key assembly 300 may be used to enable non-key touchsurface assemblies such as buttons, opaque touchpads, touchscreens, or any of the touchsurface assemblies described herein.

[0046] The key assembly 300 includes a keycap 310 that is visible to users and configured to be pressed by users, a ready/return mechanism 320, and a base 340. The unpressed and pressed positions of the keycap 310 are spaced in a press direction and in a first lateral direction orthogonal to the press direction. The press direction is analogous to the key motion found in conventional keyboards lacking lateral key motion, is in the negative-Z direction, and is the primary direction of press and key motion. In many keyboards the press direction is orthogonal to the touchsurface of the keycap or the base of the key, such that users would consider the press direction to be downwards toward the base.

[0047] The components of the key assembly 300 may be made from any appropriate material, including plastics such as polycarbonate (PC), acrylonitrile butadiene styrene (ABS), nylon, and acetal, metals such as steel and aluminum, elastomers such as rubber, and various other materials. In various embodiments, the keycap 310 is configured to be substantially rigid, such that the touchsurface of the keycap 310 appears to unaided human senses to move with rigid body motion between its unpressed and pressed positions during normal operation.

[0048] The ready/return mechanism 320 is a type of "biasing mechanism" that provides both readying and returning functions. The ready/return mechanism 320 physically biases the keycap 310 during at least part of the key press operation. It should be noted that a mechanism which only provides readying or returning function may also be termed a "biasing mechanism," if it biases the keycap 310 during at least part of the key press operation. The ready/return mechanism 320 is configured to hold the keycap 310 in its unpressed position so that the keycap 310 is ready to be pressed by a user. In addition, the ready/return mechanism 320 is also configured to return the keycap 310 partially or entirely to the unpressed position in response to a release of the press force to keycap 310. The release of the press force may be a removal of the press force, or a sufficient reduction of press force such that the key assembly is able to return the keycap 310 to the unpressed position as a matter of normal operation. In the example embodiment of Fig. 3, the key assembly 300 utilizes magnetically coupled components 322, 324 to form the ready/return mechanism 320. Magnetically coupled components 322, 324 may both comprise magnets, or one may comprise a magnet while the other comprise a magnetically coupled material such as a ferrous material. Although magnetically coupled components 322, 324 are each shown as a single rectangular shape, either or both magnetically coupled components 322, 324 may comprise non-rectangular cross-section(s) or comprise a plurality of magnetically coupled subcomponents having the same or different cross sections. For example, magnetically coupled component 322 or 324 may comprise a magnetic, box-shaped subcomponent disposed against a central portion of a ferrous, U-shaped subcomponent.

[0049] In some implementations, the magnetically coupled component 322 is physically attached to a bezel or base proximate to the keycap 310. The magnetically coupled component 324 is physically attached to the keycap and magnetically interacts with the magnetically coupled component 322. The physical attachment of the magnetically coupled

components 322, 324 may be direct or indirect (indirectly being through one or more intermediate components), and may be accomplished by press fits, adhesives, or any other technique or combination of techniques. The amount of press force needed on the keycap to overcome the magnetic coupling (e.g., overpower the magnetic attraction or repulsion) can be customized based upon the size, type, shape, and positions of the magnetically coupling components 322, 324 involved.

[0050] The key assembly 300 comprises a planar-translation-effecting (PTE) mechanism 330 configured to impart planar translation to the keycap 310 when it moves between the unpressed and pressed positions, such that a nonzero component of lateral motion occurs. The PTE mechanism 330 is formed from parts of the keycap 310 and the base 340, and comprises four ramps (two ramps 331, 332 are visible in Figs. 3A-B) disposed on the base 340. These four ramps are located such that they are proximate to the corners of the keycap 310 when the key assembly 300 is assembled. In the embodiment shown in Figs. 3A-B, these four ramps (including ramps 331, 332) are simple, sloped planar ramps located at an angle to the base 340. These four ramps (including ramps 331, 332) are configured to physically contact corresponding ramp contacting features (two ramp contacting features 311, 312 are visible in Figs. 3A-B) disposed on the underside of the keycap 310. The ramp contacting features of the keycap 310 may be any appropriate shape, including ramps matched to those of the ramps on the base 340.

[0051] In response to a press force applied to the touchsurface of the keycap 310 downwards along the press direction, the ramps on the base 340 (including ramps 331, 332) provide reaction forces. These reaction forces are normal to the ramps and include lateral components that cause the keycap 310 to exhibit lateral motion. The ramps and some retention or alignment features that mate with other features in the bezel or other appropriate component (not shown) help retain and level the keycap 310. That is, they keep the keycap

310 from separating from the ramps and in substantially the same orientation when travelling from the unpressed to the pressed position.

[0052] As shown by Figs. 3A-B, the keycap 310 moves in the press direction (negative Z-direction) in response to a sufficiently large press force applied to the top of the keycap 310. As a result, the keycap 310 moves in a lateral direction (in the positive X-direction) and in the press direction (in the negative Z-direction) due to the reaction forces associated with the ramps. The ramp contacting features (e.g., 311, 312) of the keycap 310 ride on the ramps of the base 340 (e.g., 331, 332) as the keycap 310 moves from the unpressed to the pressed position. This motion of the keycap 310 moves the magnetically coupled components 322, 324 relative to each other, and changes their magnetic interactions.

[0053] Fig. 3B shows the keycap 310 in the pressed position. For the key assembly 300, the keycap 310 has moved to the pressed position when it directly or indirectly contacts the base 340 or has moved far enough to be sensed as a key press. Fig. 3A-B do not illustrate the sensor(s) used to detect the press state of the keycap 310, and such sensor(s) may be based on any appropriate technology, as discussed above.

[0054] When the press force is released, the ready/return mechanism 320 returns the keycap 310 to its unpressed position. The attractive forces between the magnetically coupled components 322, 324 pull the keycap 310 back up the ramps (including the ramps 331, 322), toward the unpressed position.

[0055] Many embodiments using magnetic forces utilize permanent magnets. Example permanent magnets include, in order of strongest magnetic strength to the weakest: neodymium iron boron, samarium cobalt, alnico, and ceramic. Neodymium-based magnets are rare earth magnets, and are very strong magnets made from alloys of rare earth elements. Alternative implementations include other rare earth magnets, non-rare earth permanent magnets, and electromagnets.

[0056] Although the key assembly 300 utilizes magnetically coupled components to form its ready/return mechanism 320, various other techniques can be used instead or in addition to such magnetic techniques in other embodiments. In addition, separate mechanisms may be used to accomplish the readying and returning functions separately. For example, one or more mechanisms may retain the keycap in its ready position and one or more other mechanisms may return the keycap to its ready position. Examples of other readying, returning, or ready/return mechanisms include buckling elastomeric structures, snapping metallic domes, deflecting plastic or metal springs, stretching elastic bands, bending cantilever beams, and the like. In addition, in some embodiments, the ready/return mechanism push (instead of pull) the keycap 310 to resist keycap motion to the pressed position or to return it to the unpressed position. Such embodiments may use magnetic repulsion or any other appropriate technique imparting push forces.

[0057] Many variations of or additions to the components of the key assembly 300 are possible. For example, other embodiments may include fewer or more components. As a specific example, another key assembly may incorporate any number of additional aesthetic or functional components. Some embodiments include bezels that provide functions such as hiding some of the key assembly from view, protecting the other components of the key assembly, helping to retain or guide the touchsurface of the key assembly, or some other function.

[0058] As another example, other embodiments may comprise different keycaps, readying mechanisms, returning mechanisms, PTE mechanisms, leveling mechanisms, or bases. As a specific example, the keycap 310, the base 340, or another component that is not shown may comprise protrusions, depressions, or other features that help guide or retain the keycap 310. As another specific example, some embodiments use non-ramp techniques in place or (or in addition to) ramps to effect planar translation. Examples other PTE

mechanisms include various linkage systems, cams, pegs and slots, bearing surfaces, and other motion alignment features.

[0059] As yet another example, although the PTE mechanism 330 is shown in Figs. 3A-B as having ramps disposed on the base 340 and ramp contacting features disposed on the keycap 310, other embodiments may have one or more ramps disposed on the keycap 310 and ramp contacting features disposed on the base 340. Also, the PTE mechanism 330 is shown in Figs. 3A-B as having ramps 331, 332 with simple, sloped plane ramp profiles. However, in various embodiments, the PTE mechanism 330 may utilize other profiles, including those with linear, piecewise linear, or nonlinear sections, those having simple or complex curves or surfaces, or those including various convex and concave features. Similarly, the ramp contacting features on the keycap 310 may be simple or complex, and may comprise linear, piecewise linear, or nonlinear sections. As some specific examples, the ramp contacting features may comprise simple ramps, parts of spheres, sections of cylinders, and the like. Further, the ramp contacting features on the keycap 310 may make point, line, or surface contact the ramps on the base 340 (including ramps 331, 332).“Ramp profile” is used herein to indicate the contour of the surfaces of any ramps used for the PTE mechanisms. In some embodiments, a single keyboard may employ a plurality of different ramp profiles in order to provide different tactile responses for different keys.

[0060] As a further example, embodiments which level their touchsurfaces may use various leveling techniques which use none, part, or all of the associate PTE mechanism.

[0061] Fig. 4 shows an exploded view of an example keyboard construction 400 in accordance with the techniques described herein. A construction like the keyboard construction 400 may be used to implement any number of different keyboards, including keyboard 100. Proceeding from the top to the bottom of the keyboard, the bezel 420 comprises a plurality of apertures through which keycaps 410 of various sizes are accessible

in the final assembly. Magnetically coupled components 422, 424 are attached to the keycaps 410 or the base 440, respectively. The base 440 comprises a plurality of PTE mechanisms (illustrated as simple rectangles on the base 440) configured to guide the motion of the keycaps 410. Underneath the base 440 is a key sensor 450, which comprises one or more layers of circuitry disposed on one or more substrates.

[0062] Various details have been simplified for ease of understanding. For example, adhesives that may be used to bond components together are not shown. Also, various embodiments may have more or fewer components than shown in keyboard construction 400, or the components may be in a different order. For example, the base and the key sensor 450 may be combined into one component, or swapped in the stack-up order.

[0063] FIGS. 5A-B are cross-sectional side views of a key assembly 500 in accordance with a key retracting embodiment. FIG. 5A illustrated the key assembly 500 in an unpressed (or ready) position and FIG. 5B shows the key assembly in the retracted position. As will be discussed below, a planar translation effecting mechanism is used in some embodiments to form a portion of a key retraction mechanism for the key assembly 500.

[0064] The key assembly 500 comprises a keycap 502 having a touch surface 504 configured to receive a press force from a user and a chassis 506. A bezel or cover 508 (commonly referred to as the "C" cover) is configured above the chassis and includes a key holder feature 510 that forms a portion of a key retraction mechanism that retracts the keycap 502 toward a retracted position as will be discussed below. The key assembly 500 also includes a planar translation effecting (PTE) mechanism that comprises ramps 512 and 514 that guide ramp contacting features 516 and 518 of the keycap 502 from the unpressed position toward the pressed position. In normal (typing) operation, a press force 520 is applied by a user to the touch surface 504 and the ramp contacting features 516 and 518 move along the ramps 512 and 514 in the press direction (Z direction) and also in a second

direction (X direction) orthogonal to the press direction. The PTE mechanism also includes inverted or reverse ramps 522 in the chassis 506 and reverse ramp contacting features 524 in the keycap 502. The reverse ramps 522 operate to drive the keycap 502 toward the ramp 512 in the event the touch surface 504 is pressed off-center. As the keycap 502 nears the pressed position, a sensor 522 can detect the key press and provide a sensing signal to any processing system employed in any particular implementation. Upon removal of the press force 520, the magnetic attraction of the ready-return mechanism (320 of FIG. 3) draws the keycap 502 back toward the unpressed (ready) position.

[0065] The sensor 526 may use any appropriate technology, including any of the ones described herein. In some embodiments, the sensor 526 detects changes in capacitance, the keycap 502 comprises primarily dielectric material, and the change in the position of the dielectric material of the keycap 502 causes the primary changes in capacitance detected by the sensor 526. In some embodiments, the sensor 526 detect changes in capacitance, conductive material is disposed in or on the keycap 502, and the change in position of the conductive material of the keycap 502 causes the primary changes in capacitance detected by the sensor 526. In some embodiments, the sensor 526 is configured to actively detect unpressed and pressed positions of the keycap 502. In some embodiments, the sensor 526 is configured to actively detect only the pressed state of the keycap 502, and it is assumed that no detection of the pressed state means the keycap 502 is unpressed, or vice versa. A processing system (not shown) communicatively coupled to the sensor 526 operates the sensor 526 to produce signals indicative of the pressed state of the key assembly, and determines a press state of the keycap 502 based on these signals. As the keycap 502 moves toward the retracted position, the sensor 516 may be deactivated or the sensor signals ignored and not processed so as not to provide the processing system with numerous erroneous key press indications.

[0066] According to exemplary embodiments, the PTE mechanism forms a portion of the key retraction mechanism along with the key holding feature 510 of the bezel 508. A plurality of retractable key assemblies 500 may be incorporated in keyboards or keypads to provide different advantages. In some embodiments, keyboards or keypads with retractable key assemblies provide thinner profiles when the keycaps 502 are retained in the retracted position. In some laptop or laptop-tablet hybrid embodiments, the thinner profile of a retracted keyboard allows the display to be closer to the base of the keyboard when closed, reducing the overall thickness of the computer system (compared keyboards with keys in their unpressed positions). In some embodiments, the key-bearing surfaces of keyboards or keypads with retracted keys can be used as support surfaces for objects or provide flat touch input surfaces. As a specific example, a tablet computer may be configured to rest on the key-bearing surface of its tablet cover.

[0067] In some embodiments, the keycap 502 may be retracted by movement of the chassis 506 relative to the bezel 508 as indicated by arrow 528. In this embodiment, the key holding feature 510 of the bezel 508 prevents the keycap 502 from moving with the chassis 506. As the chassis moves (in the negative X direction in this example) the reverse ramp 522 and reverse ramp contacting feature 524 cause the keycap 502 to be guided by the PTE mechanism toward a retracted position. In some embodiments, the retracted position may be substantially the same key position as the pressed position. In some embodiments, the keycap 502 may be retracted by movement of the bezel 508 relative to the chassis 506 as indicated by arrow 530. In this embodiment, the key holding feature 510 of the bezel 508 moves (pushes) the keycap as the chassis moves (in the positive X direction in this example) into the reverse ramp 522 and reverse ramp contacting feature 524, which cause the keycap 502 to be guided by the PTE mechanism toward a retracted position. In some embodiments, the chassis 506 and the bezel 508 remain stationary and the key holding feature 510 is

configured to move relative to chassis 506 and the bezel 508. The movement of the key holding feature 510 in this embodiment also moves (pushes) the keycap (in the positive X direction) to be guided by the PTE mechanism toward the retracted position.

[0068] In those embodiments employing a magnetic ready-return mechanism, the force required to move the chassis 506 and the bezel 508 relative to each other may be quite high. For example, if a press force of approximately eighty grams was require to overcome the magnetic attraction of the ready-return mechanism, then the force required to move the chassis 506 and the bezel 508 relative to each other would be approximately eighty grams multiplied by the number of key assemblies in the particular keypad or keyboard. Additionally, any friction in the collective ramps/ramp contacting features of the keyboard system could increase the required key retraction force. Accordingly, some embodiments employ a bias mechanism 532 that operates to apply a bias force 534 to the chassis. In some embodiments, the bias force 534 is selected to be greater than the collective magnetic forces of the ready-return mechanisms so that the keycaps are normally retracted. In some embodiments, the bias force 534 is selected to be less than the collective magnetic forces of the ready-return mechanisms so that they keycaps are normally not retracted, however, the bias force 534 reduces the additional force required to move the keycaps toward the retracted position.

[0069] FIGS. 6 A-C are side view illustrations of an exemplary embodiment of the key retraction mechanism for a laptop computer 600 implementation. As shown in FIG. 6A, the keycaps 602 are in the unpressed position where the touch surface of the keycaps are above the bezel 604 as indicated at 606. As the display 608 moves toward the bezel 604 the key retraction mechanism engages (FIG. 6B) and moves the keycaps toward retracted position as indicated at 610. When the display 608 closes to meet the bezel 604 (FIG. 6C), the keycaps

602 have retracted to be substantially flush with the bezel 602. The reverse motion of the display 608 will cause the keycaps 602 to rise to the unpressed position.

[0070] FIGS. 7 A-D are illustrations of exemplary key retraction mechanisms that may be employed in any particular implementation. In FIG. 7 A, a computer 700 includes keycaps 702, a bezel 704 and a cover or display 706. As the cover 706 approaches the bezel 704, a cam 708 engages an arm 710 of the chassis, which moves the chasses relative to the bezel. The key holding features of the bezel operate to retract the keycaps as discussed above in connection with FIG. 5.

[0071] FIG. 7 B illustrates a convertible computer embodiment in which the cover 706 may be folded over the bezel 704 so that the convertible computer may be used as a tablet computer. A hinge 712 includes a portion 714 that engages an arm 716 of the chassis as the cover 706 approaches the bezel 704. This operation moves the chassis relative to the bezel and the key holding features of the bezel operate to retract the keycaps.

[0072] FIG. 7 C illustrates another embodiment that utilizes the operation of a rack 718 and pinion 720 to move the chassis relative to the bezel. In yet another embodiment, FIG. 7D employs a latch 722 having a beveled surface 724. As the cover 706 approaches the bezel 704, the later passes through an aperture 726 where the beveled surface 724 engages a corresponding bevel 728 of the chassis 730. The interaction of the beveled surfaces 724 and 728 move the chassis 730 relative to the bezel 704 to retract the keycaps 702.

[0073] As will be appreciated, any number of mechanisms may be employed to move the chassis and bezel relative to one another. Examples range from simply coupling a strap or ribbon between the chassis and the cover to pull-push the chassis as the cover opens and closes. More complex examples include motorized systems to move the chassis relative to the bezel. In such a motorized retraction mechanism a control system may retract or protrude

the keycaps as appropriate, such as in response to system status, user hand position and the like. For example, in an embodiment with sensors that detect the proximity of the user's palm, fingers, or other hand portions to determine when the user is approaching a "ready to type" position, the motorized retraction mechanism moves the keys to their ready position in response to a determination that the user is preparing to type.

[0074] FIGS. 8A-B are simplified cross-sectional side views of a key assembly 800 in accordance with an embodiment. FIG. 8A illustrated the key assembly 800 in an unpressed (or ready) position and FIG. 8B shows the key assembly in the pressed position. As can be seen, in the pressed position, the key holding feature 814 has held the keycap 802 of the key assembly 800 while the base 804 has moved in a negative X direction 816. The keycap 802 thus moves in the press direction (Z direction) via a four-bar planar translation effecting mechanism 808 coupled between the chassis 804 and the keycap 802. A magnetic ready-return mechanism includes a magnet 812 and a magnetic ferrous portion of the chassis 810. The four-bar planar translation effecting mechanism 808 provides a simplified PTE mechanism that may be less expensive or more readily implemented as compared to the ramp and ramp contacting features of FIG. 5.

[0075] FIGS. 9A-B are simplified cross-sectional side views of a key assembly 900 in accordance with an embodiment. FIG. 9A illustrated the key assembly 900 in an unpressed (or ready) position and FIG. 9B shows the key assembly in the pressed position. In this embodiment, the base 904 is moved in the positive X direction 912 causing the a portion 910 of the ready-return mechanism to push the keycap along the dual translation path in the press direction (Z direction) and the positive X direction via a four-bar planar translation effecting mechanism 908 coupled between the chassis 904 and the keycap 902. Again, this four-bar planar translation effecting mechanism 908 provides a simplified PTE mechanism that may

be less expensive or more readily implemented as compared to the ramp and ramp contacting features of FIG. 5.

[0076] Thus, the techniques described herein can be used to implement any number of devices utilizing different touchsurface assemblies, including a variety of keyboards each comprising one or more key assemblies in accordance with the techniques described herein. Some components may be shared when multiple touchsurfaces are placed in the same device. For example, the base may be shared by two or more touchsurfaces. As another example, the keyswitch sensor may be shared through sharing sensor substrates, sensor electrodes, or the like.

[0077] The implementations described herein are meant as examples, and many variations are possible. As one example, any appropriate feature described with one implementation may be incorporated with another. As a first specific example, any of the implementations described herein may or may not utilize a finishing tactile, aesthetic, or protective layer. As a second specific example, ferrous material may be used to replace magnets in various magnetically coupled component arrangements.

[0078] In addition, the structure providing any function may comprise any number of appropriate components. For example, a same component may provide leveling, planar translation effecting, readying, and returning functions for a key press. As another example, different components may be provide these functions, such that a first component levels, a second component effects planar translation, a third component readies, and a fourth component returns. As yet another example, two or more components may provide a same function. For example, in some embodiments, magnets and springs together provide the return function, or the ready and return functions. Thus, the techniques described in the various implementations herein may be used in conjunction with each other, even where the

function may seem redundant. For example, some embodiments use springs to back-up or augment magnetically-based ready/return mechanisms.

What is claimed is:

1. A keyboard, comprising:

a bezel having a plurality of key openings and a plurality of key holding features configured adjacent to the plurality of key openings on a bottom side of the bezel;

a plurality of keycaps each positioned within a respective one of the plurality of key openings and each having a touch surface for receiving a press force that moves the keycap from an unpressed position toward a pressed position, the unpressed position and pressed position separated in a press direction and a second direction orthogonal to the press direction;

a chassis having a plurality of planar-translation effecting mechanisms each supporting a respective one of the plurality of keycaps to guide the respective keycap in the press direction and the second direction as the keycap moves from the unpressed position toward the pressed position; and

a key retraction mechanism configured to move the chassis relative to the bezel;

wherein the key holding features of the bezel are configured to limit movement of the keycaps in the second direction during movement of the chassis relative to the bezel, while the planar-translation effecting mechanism move the plurality of keycaps toward a retracted position.

2. The keyboard of claim 1, wherein:

each of the plurality of keycaps includes a first magnetic component;

the chassis includes a second magnetic component for each respective keycap of the plurality of keycaps; and

the first and second magnetic components form a ready-return mechanism that biases the respective keycap toward the unpressed position.

3. The keyboard of claim 2, wherein one of the first and second magnetic components comprises a non-magnetized ferrous material.

4. The keyboard of claim 1, further comprising a biasing mechanism coupled to the chassis and configured to bias the plurality of keycaps toward the retracted position.

5. The keyboard of claim 4, wherein a magnitude of a biasing force provided by the biasing mechanism is slightly larger than a magnetic force provided by the ready-return mechanisms.

5. The keyboard of claim 1, wherein each of the planar-translation effecting mechanisms comprise a four bar linkage configured between the chassis and a respective keycap.

6. The keyboard of claim 5, wherein the four bar linkage is configured with the chassis connection as a grounded link and the keycap connection as the floating link.

7. The keyboard of claim 1, wherein each of the planar-translation effecting mechanisms comprise ramp features on the chassis for each respective keycap and the plurality of keycaps include ramp contacting features the move along the ramp features as the respective keycap moves from the unpressed position toward the pressed position.

8. The keyboard of claim 7, wherein the planar-translation effecting mechanism further comprises inverted ramp features on the chassis for each respective keycap and the plurality of keycaps include inverted ramp contacting features, the key holding features of the bezel hold the plurality of keycaps during movement to a retracted position.

9. The keyboard of claim 8, wherein movement of the keycaps toward the retracted position comprises movement substantially in the press direction relative to the key holding features.

10. The keyboard of claim 1, wherein each of the plurality of keycaps are substantially flush with a top surface of the bezel when the plurality of keycaps are in the retracted position.

11. The keyboard of claim 1, further comprising a lid coupled to the key retraction mechanism, wherein movement of the lid toward the bezel causes the key retraction mechanism to move the chassis relative the bezel thereby moving the plurality of keys to the retracted position.

12. The keyboard of claim 12, wherein the lid comprises a display.

13. The keyboard of claim 1, further comprising a plurality of capacitive sensors each for sensing when the respective keycap is in the pressed position.

14. The keyboard of claim 12, wherein signals from the plurality of capacitive sensors are not processed when the key retraction mechanism moves the chassis relative to the bezel.

15. A keyboard, comprising:

a bezel having a plurality of key openings and a plurality of key holding features configured adjacent to the plurality of key openings on a bottom side of the bezel;

a plurality of keycaps each positioned within a respective one of the plurality of key openings and each having a touch surface for receiving a press force that moves the keycap from an unpressed position toward a pressed position, the unpressed position and pressed position separated in a press direction and a second direction orthogonal to the press direction;

a chassis having a plurality of ramp features each interacting with ramp contacting features of a respective one of the plurality of keycaps to guide the respective keycap in the press direction and the second direction as the keycap moves from the unpressed position toward the pressed position, the chassis also including a plurality of inverted ramp features each interacting with inverted ramp contacting features of a respective one of the plurality of keycaps; and

a key retraction mechanism configured to cause movement between the chassis and the bezel;

wherein the key holding features of the bezel are configured to limit movement of the keycaps in the second direction in response to movement of the chassis relative to the bezel while the inverted ramps and inverted ramp contacting features move the plurality of keycaps toward a retracted position.

16. The keyboard of claim 15, wherein:

each of the plurality of keycaps includes a first magnetic component;

the chassis includes a second magnetic component for each respective keycap of the plurality of keycaps; and

the first and second magnetic components form a ready-return mechanism that biases the respective keycap toward the unpressed position.

17. The keyboard of claim 16, wherein one of the first and second magnetic components comprises a non-magnetized ferrous material.

18. The keyboard of claim 16, further comprising a biasing mechanism coupled to the chassis and configured to bias the plurality of keycaps toward the retracted position.

19. The keyboard of claim 18, wherein a magnitude of a biasing force provided by the biasing mechanism is slightly larger than a magnetic force provided by the ready-return mechanisms.

19. The keyboard of claim 15, further comprising a display coupled to the key retraction mechanism, wherein movement of the display toward the bezel causes the key retraction mechanism to effect the movement between the chassis and the bezel thereby moving the plurality of keys to the retracted position.

20. The keyboard of claim 15, wherein the plurality of keycaps are substantially flush with a top surface of the bezel when the plurality of keycaps are in the retracted position.

21. The keyboard of claim 15, further comprising a plurality of capacitive sensors each for sensing when the respective keycap is in the pressed position.

22. A method of effecting motion of a plurality of keycaps positioned in a bezel of a keyboard, wherein each of the plurality of keycaps are supported in an unpressed position by a planar-translation effecting mechanism of a chassis, each of the plurality of keycaps configured to move between the unpressed position and a pressed position, wherein the

unpressed and pressed positions are separated in a press direction and in a second direction orthogonal to the press direction, the method comprising:

in response to movement between the chassis and the bezel, the planar-translation effecting mechanism moves each of the plurality of keycaps toward the press direction to a retracted position.

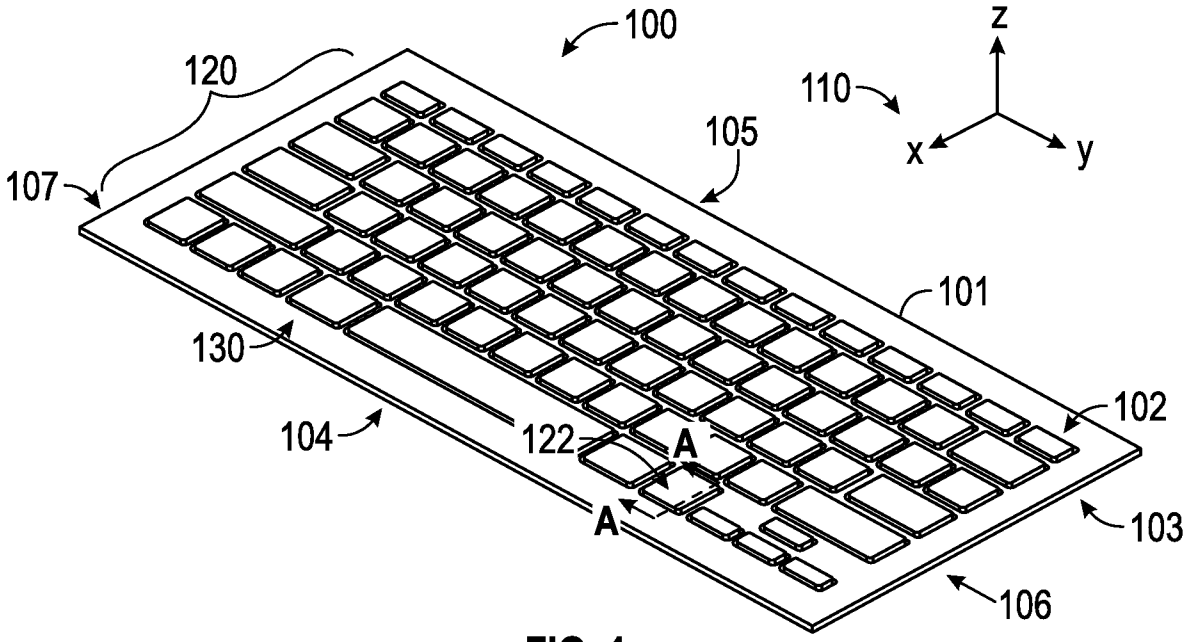
100
120
107
105
110
z
x
y
101
130
102
104
122
A
A
103
106

FIG. 1

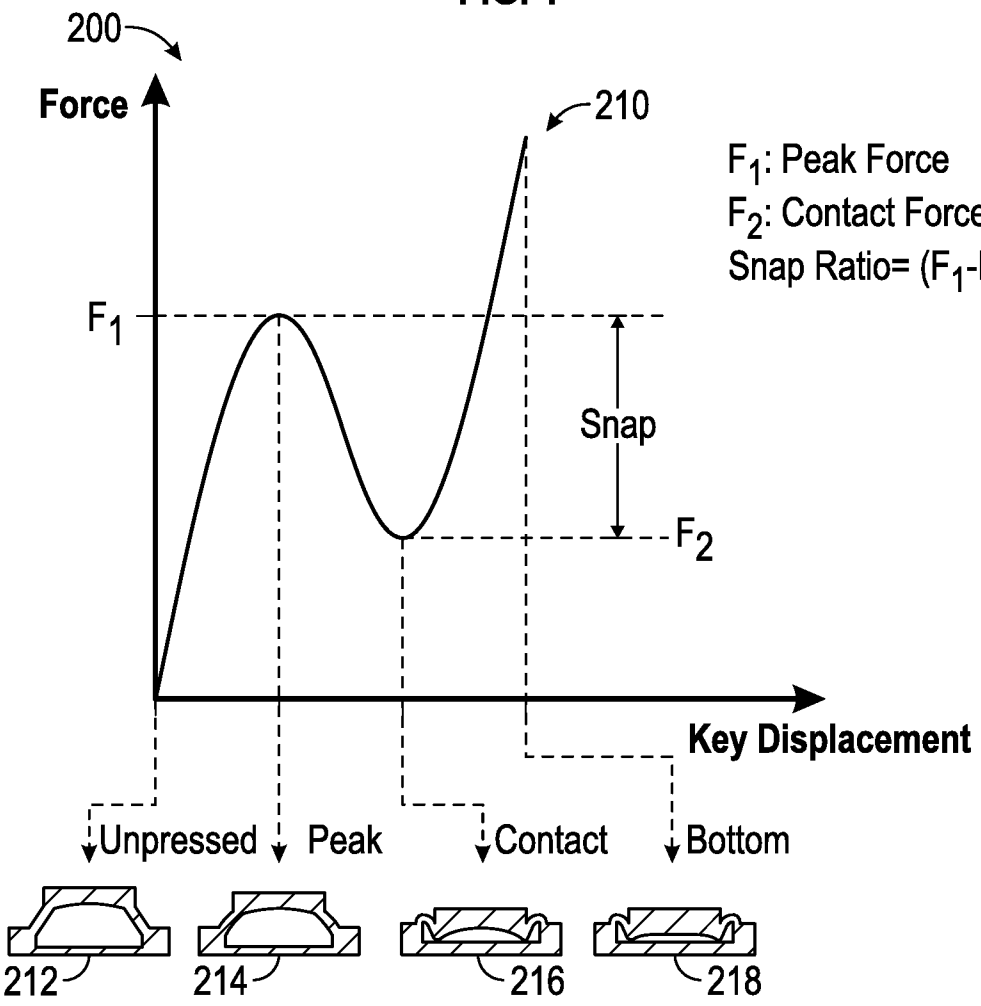
200
Force
210
F1: Peak Force
F2: Contact Force
Snap Ratio= (F1-F2)/(F1)
F1
Snap
F2
Key Displacement
Unpressed
Peak
Contact
Bottom
212
214
216
218

FIG. 2

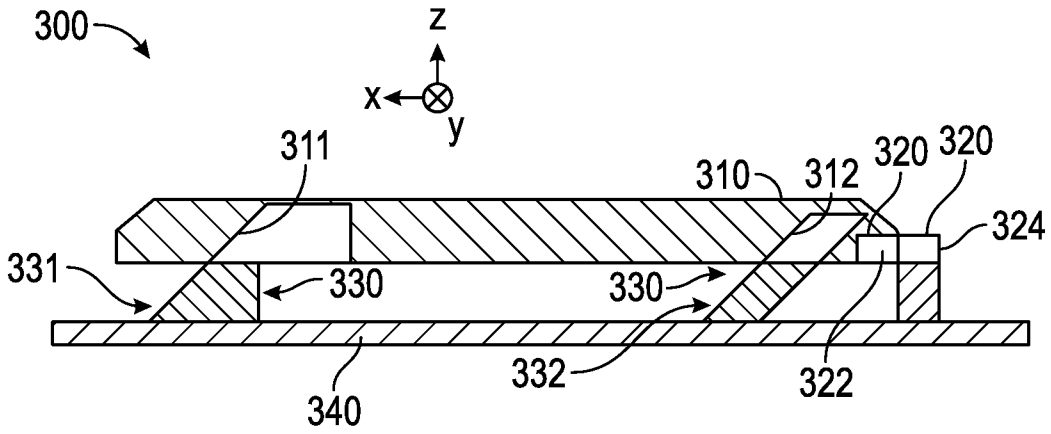
300
z
x
y
311
310
312
320
320
324
331
330
330
332
322
340

FIG. 3A

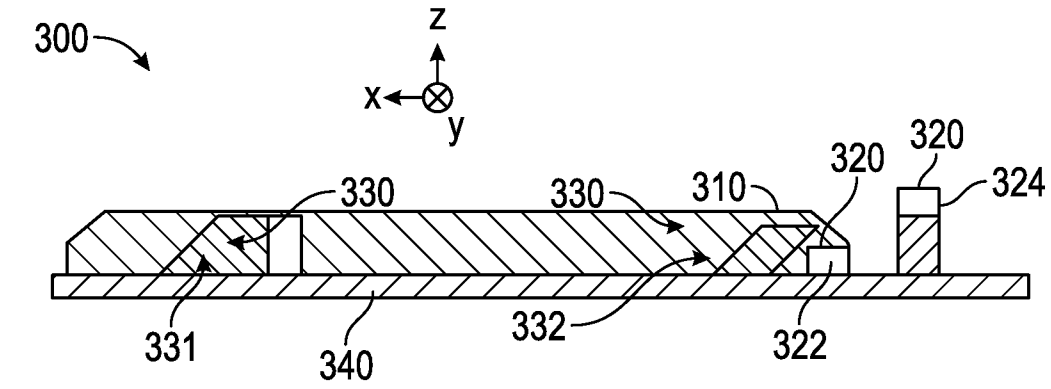
300
z
x
y
320
320
330
330
310
324
331
340
332
322

FIG. 3B

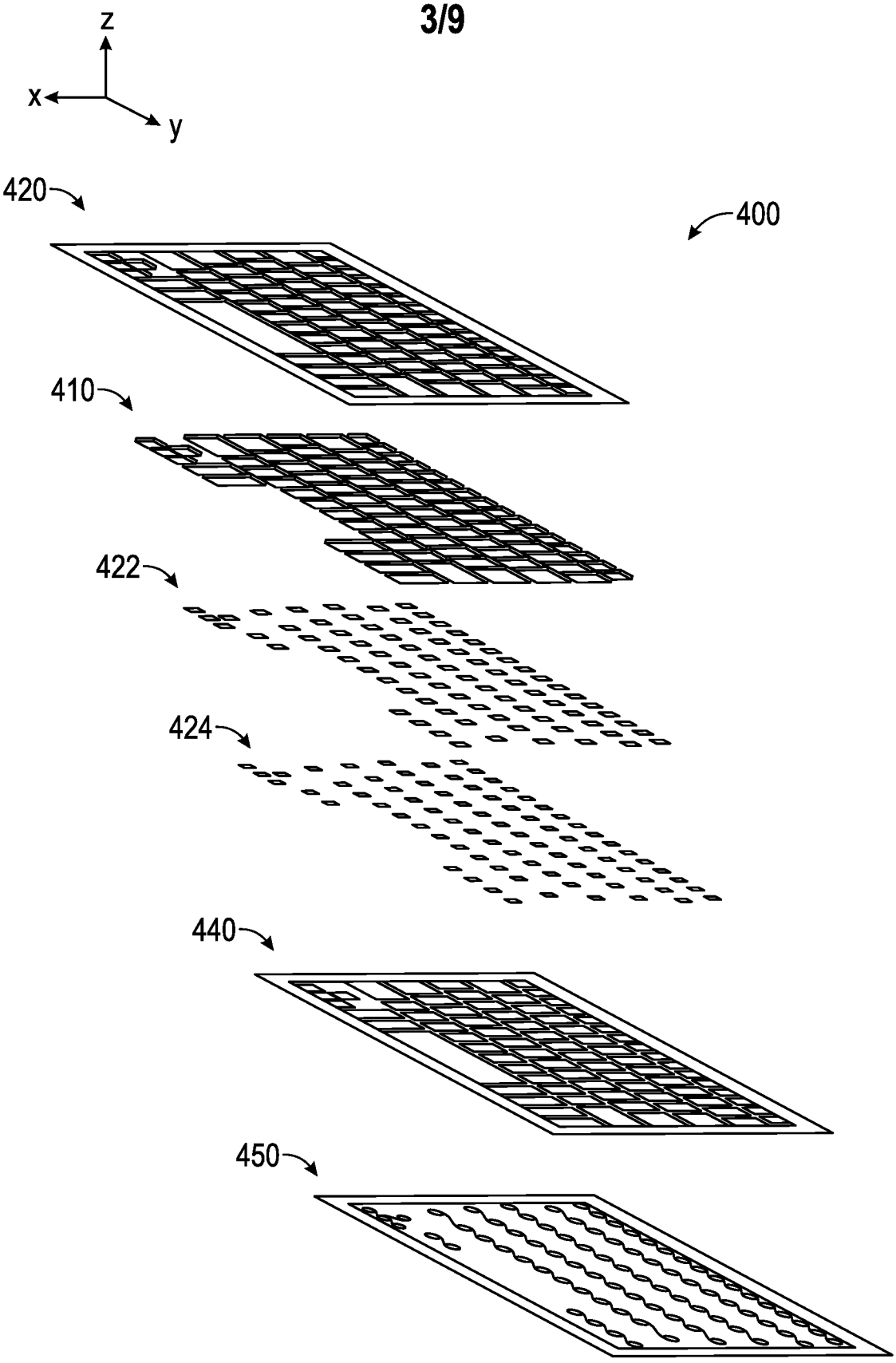

FIG. 4

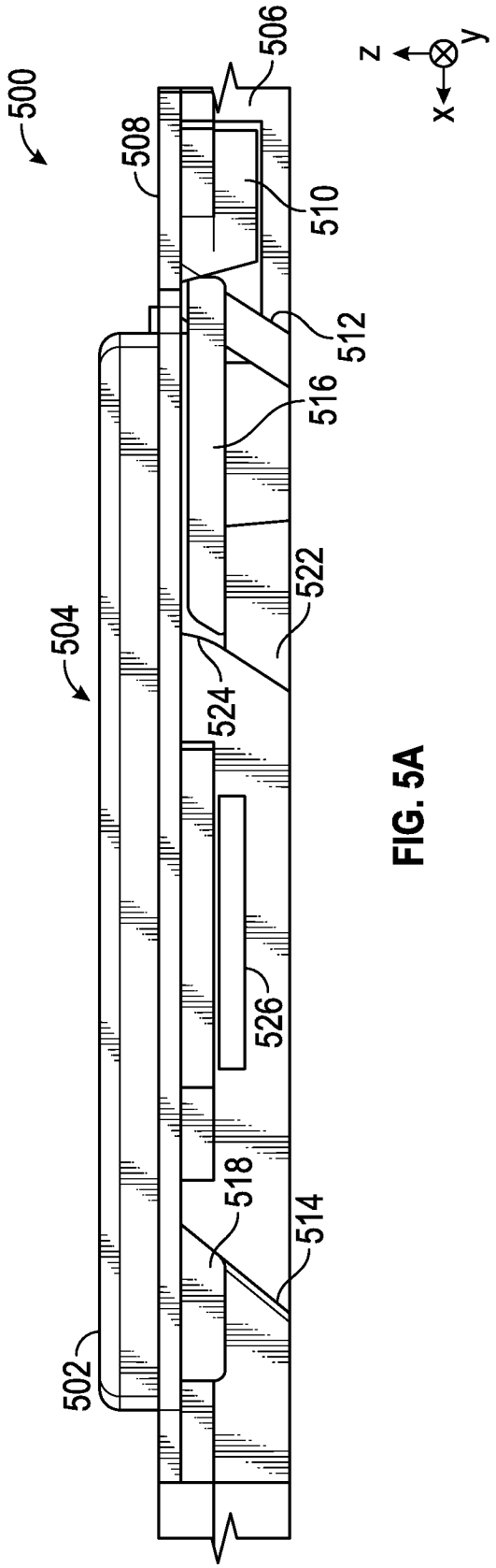
500
502
504
506
508
510
512
514
516
518
522
524
526
z
y
x

FIG. 5A

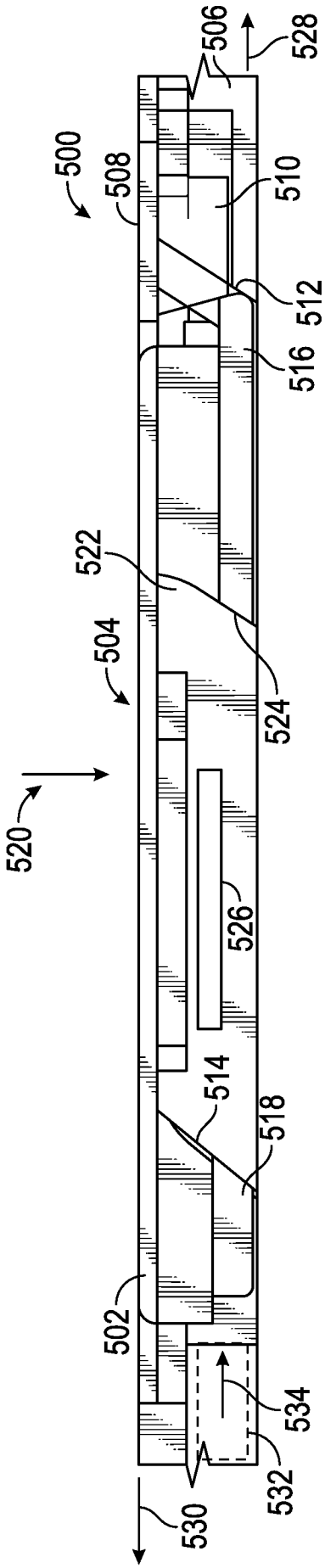
500
502
504
506
508
510
512
514
516
518
520
522
524
526
528
530
532
534

FIG. 5B

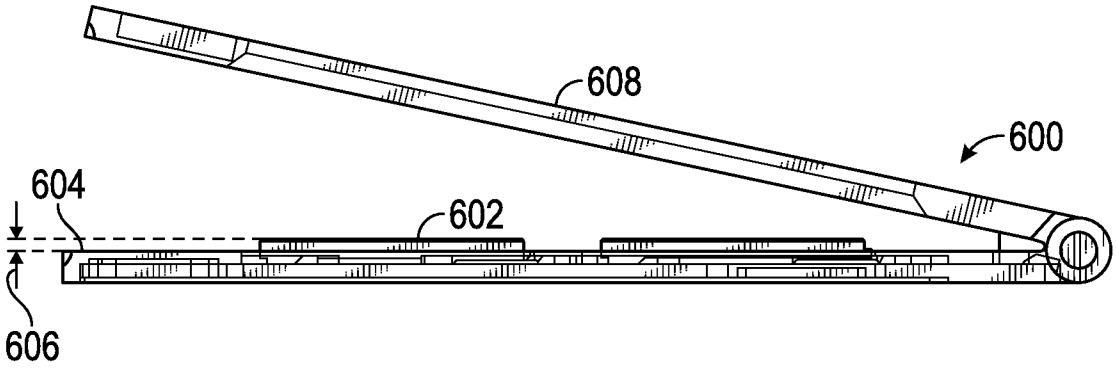

FIG. 6A

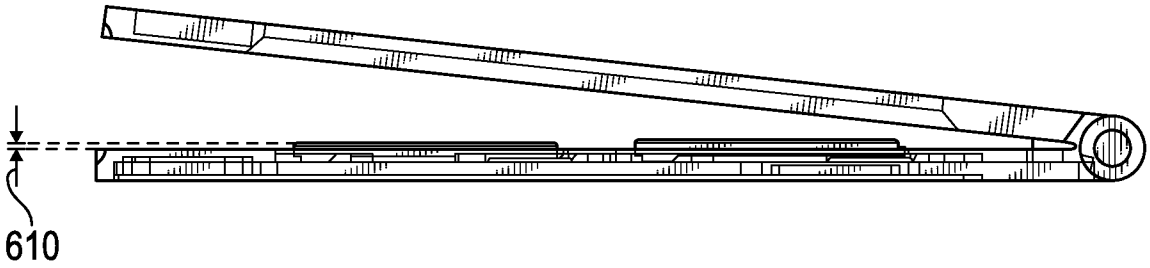

FIG. 6B

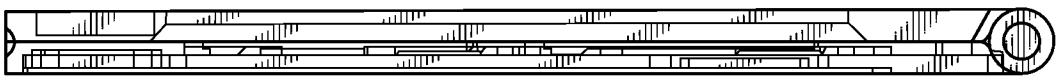

FIG. 6C

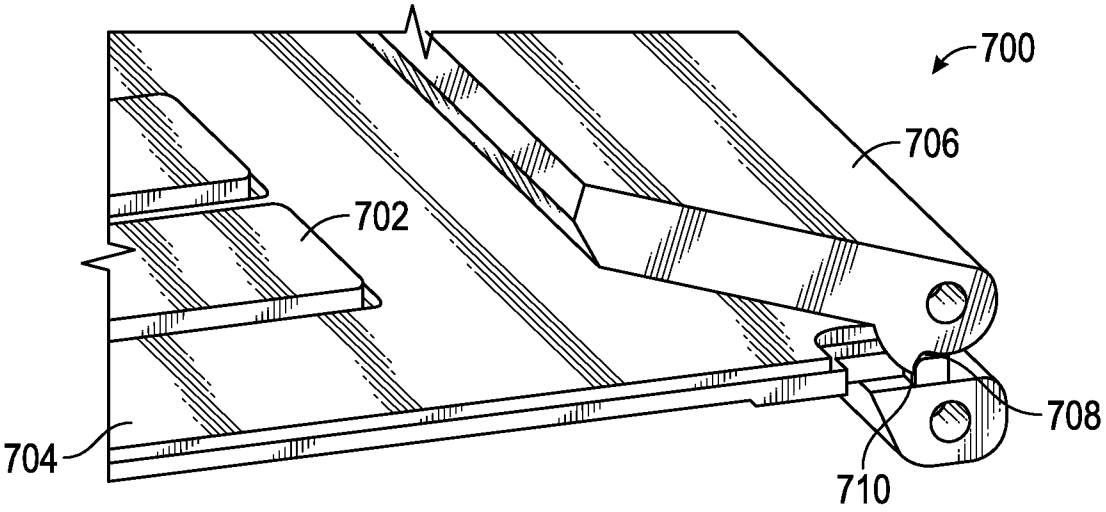

FIG. 7A

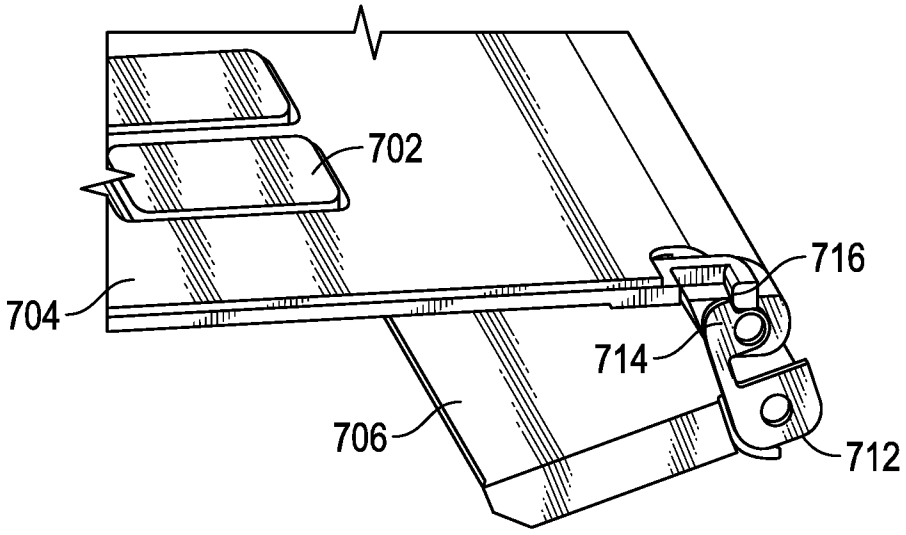

FIG. 7B

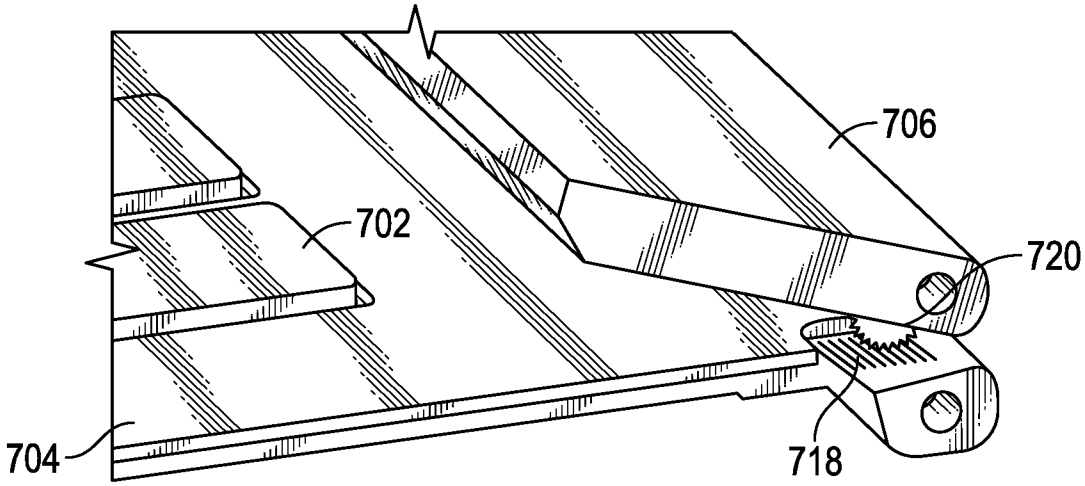

FIG. 7C

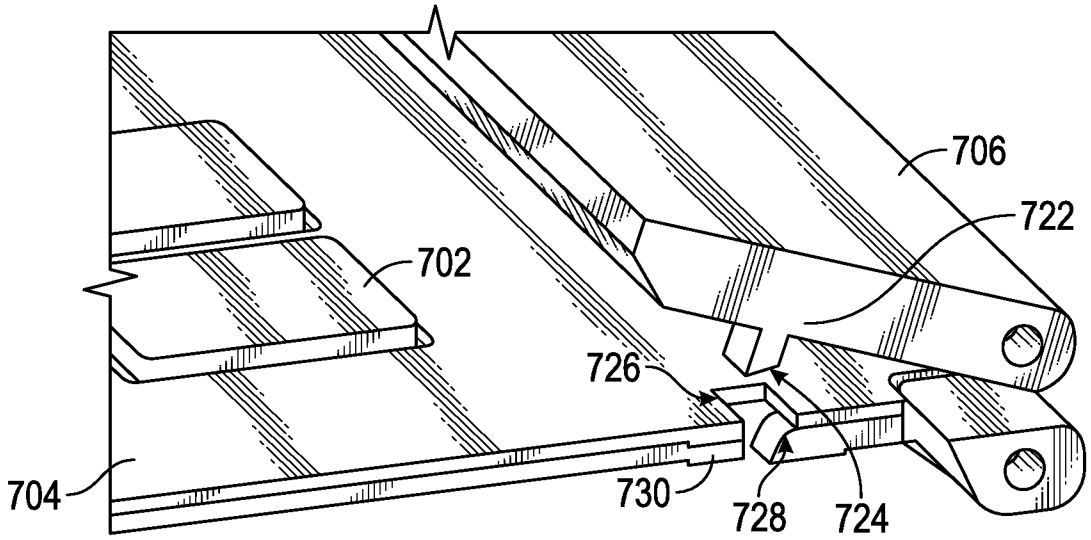

FIG. 7D

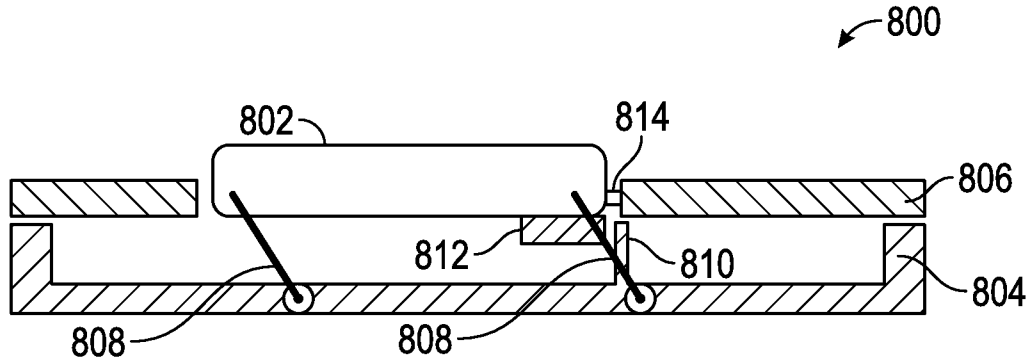
800
802
814
806
812
810
804
808
808

FIG. 8A

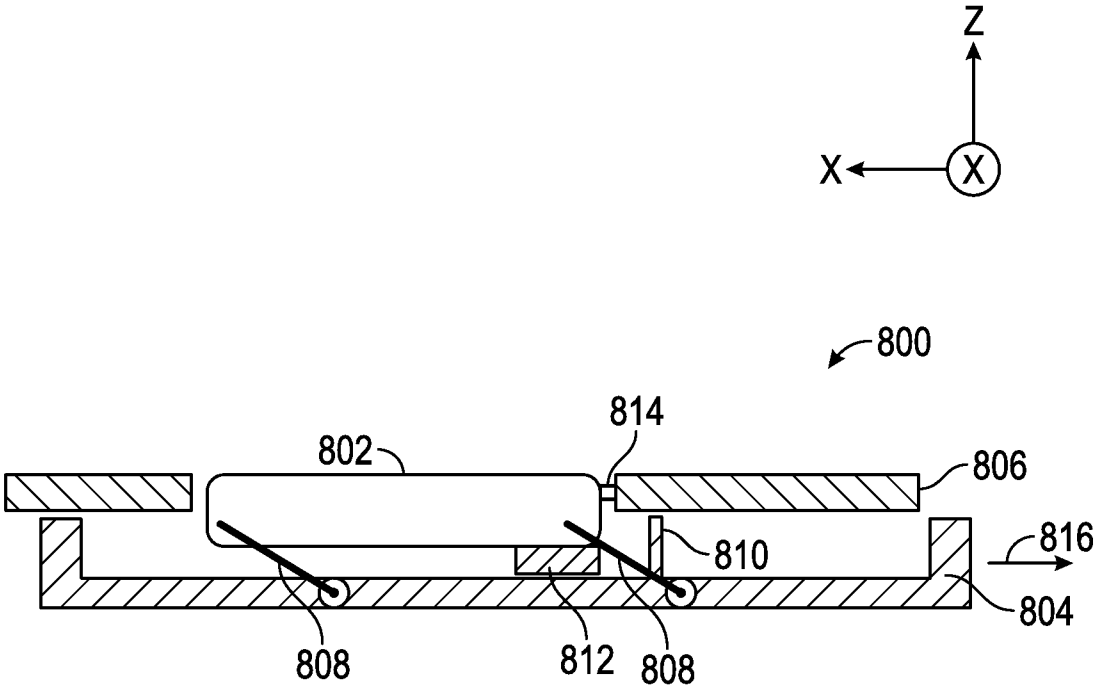
Z
X
X
800
814
802
806
816
810
804
808
812
808

FIG. 8B

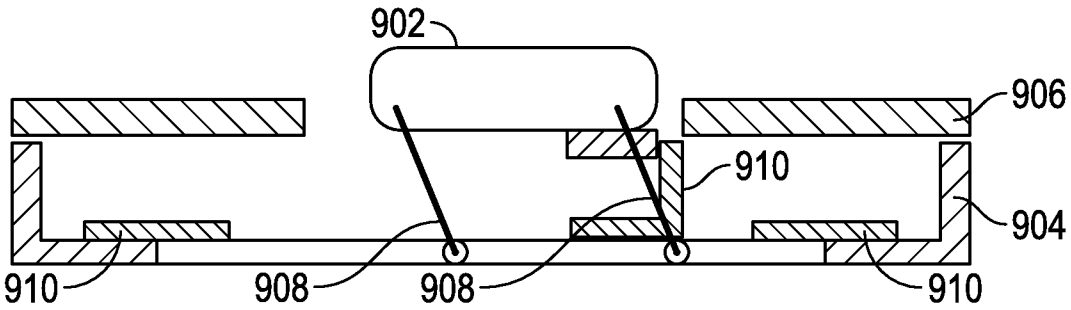
902
906
910
904
910
908
908
910

FIG. 9A

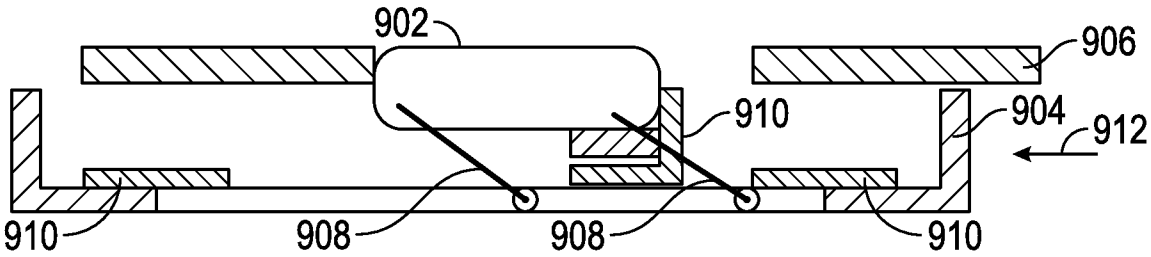
902
906
910
904
912
910
908
908
910

FIG. 9B

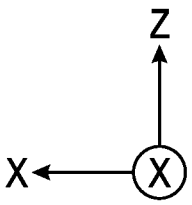
Z
X
X

INTERNATIONAL SEARCH REPORT

International application No.
PCT/US2014/034266

A. CLASSIFICATION OF SUBJECT MATTER

G06F 3/02(2006.01)i

According to International Patent Classification (IPC) or to both national classification and IPC

B. FIELDS SEARCHED

Minimum documentation searched (classification system followed by classification symbols)
G06F 3/02; B41J 11/56; G09G 5/08; G06F 1/16; G06F 3/041; G06F 3/01

Documentation searched other than minimum documentation to the extent that such documents are included in the fields searched
Korean utility models and applications for utility models
Japanese utility models and applications for utility models

Electronic data base consulted during the international search (name of data base and, where practicable, search terms used)
eKOMPASS(KIPO internal) & keywords: keyboard, keycap, bezel, chassis, moving, openings, press, retract, and similar terms

C. DOCUMENTS CONSIDERED TO BE RELEVANT

Category*	Citation of document, with indication, where appropriate, of the relevant passages	Relevant to claim No.
A	US 2012-0092263 A1 (CODY GEORGE PETERSON et al.) 19 April 2012 See paragraphs 48-62; figures 9, 10; and claim 1.	1-5,5(1)-19 ,19(1)-22
A	WO 01-16677 A1 (ERICSSON, INC.) 08 March 2001 See pages 4-8; figures 1-6; and claim 1.	1-5,5(1)-19 ,19(1)-22
A	WO 2010-048373 A2 (HEWLETT-PACKARD DEVELOPMENT COMPANY, L.P.) 29 April 2010 See paragraphs 17-22; figure 1; and claim 7.	1-5,5(1)-19 ,19(1)-22
A	US 5754395 A (RICHARD T. HSU et al.) 19 May 1998 See column 3, line 48 - column 4, line 18; and figure 1.	1-5,5(1)-19 ,19(1)-22
A	US 6046728 A (ROBERT K. HUME et al.) 04 April 2000 See column 3, line 11 - column 4, line 52; and figure 1.	1-5,5(1)-19 ,19(1)-22

☐ Further documents are listed in the continuation of Box C.

☒ See patent family annex.

* Special categories of cited documents:
"A" document defining the general state of the art which is not considered to be of particular relevance
"E" earlier application or patent but published on or after the international filing date
"L" document which may throw doubts on priority claim(s) or which is cited to establish the publication date of another citation or other special reason (as specified)
"O" document referring to an oral disclosure, use, exhibition or other means
"P" document published prior to the international filing date but later than the priority date claimed
"T" later document published after the international filing date or priority date and not in conflict with the application but cited to understand the principle or theory underlying the invention
"X" document of particular relevance; the claimed invention cannot be considered novel or cannot be considered to involve an inventive step when the document is taken alone
"Y" document of particular relevance; the claimed invention cannot be considered to involve an inventive step when the document is combined with one or more other such documents,such combination being obvious to a person skilled in the art
"&" document member of the same patent family

Date of the actual completion of the international search	Date of mailing of the international search report
05 August 2014 (05.08.2014)	**07 August 2014 (07.08.2014)**

Name and mailing address of the ISA/KR
International Application Division
Korean Intellectual Property Office
189 Cheongsa-ro, Seo-gu, Daejeon Metropolitan City, 302-701,
Republic of Korea
Facsimile No. +82-42-472-7140

Authorized officer
YU, JAE CHON
Telephone No. +82-42-481-8647

INTERNATIONAL SEARCH REPORT

Information on patent family members

International application No.
PCT/US2014/034266

Patent document cited in search report	Publication date	Patent family member(s)	Publication date
US 2012-0092263 A1	19/04/2012	None	
WO 01-16677 A1	08/03/2001	AU 5879600 A	26/03/2001
		CA 2371939 A1	28/12/2000
		CA 2375318 A1	28/12/2000
		CA 2396804 A1	11/10/2001
		CA 2398729 A1	11/10/2001
		CA 2398729 C	03/07/2007
		EP 1204373 A1	15/05/2002
		EP 1221129 A1	10/07/2002
		EP 1221129 B1	12/09/2007
		EP 1259164 A1	27/11/2002
		EP 1264275 A2	11/12/2002
		JP 04555524 B2	06/10/2010
		JP 04958354 B2	20/06/2012
		JP 2003-502093 A	21/01/2003
		JP 2003-502766 A	21/01/2003
		JP 2003-528683 A	30/09/2003
		JP 2003-529423 A	07/10/2003
		US 6263096 B1	17/07/2001
		US 6282257 B1	28/08/2001
		US 6307911 B1	23/10/2001
		US 6332035 B1	18/12/2001
		US 6351372 B1	26/02/2002
		US 6351548 B1	26/02/2002
		WO 00-78218 A1	28/12/2000
		WO 00-79473 A1	28/12/2000
		WO 01-74250 A1	11/10/2001
		WO 01-75793 A2	11/10/2001
		WO 01-75793 A3	24/01/2002
		WO 02-26131 A1	04/04/2002
WO 2010-048373 A2	29/04/2010	CN 102405455 A	04/04/2012
		DE 112009002567 A5	29/09/2011
		GB 201106732 D0	01/06/2011
		GB 2476620 A	29/06/2011
		GB 2476620 B	11/04/2012
		JP 2012-507079 A	22/03/2012
		KR 10-2011-0079814 A	08/07/2011
		US 2011-0193813 A1	11/08/2011
		WO 2010-047718 A2	29/04/2010
		WO 2010-047718 A3	17/06/2010
US 5754395 A	19/05/1998	None	
US 6046728 A	04/04/2000	None	