(19) Europäisches Patentamt
European Patent Office
Office européen des brevets

(11) Publication number: **0 325 551 A1**

(12) EUROPEAN PATENT APPLICATION

(21) Application number: **89500005.7**

(51) Int. Cl.[4]: **D 04 B 15/06**

(22) Date of filing: **09.01.89**

(30) Priority: **13.01.88 ES 8800074**

(43) Date of publication of application:
26.07.89 Bulletin 89/30

(84) Designated Contracting States: **DE ES FR GB IT**

(71) Applicant: **JUMBERCA, S.A.**
Jacinto Benavente 32
E-08911 Badalona Barcelona (ES)

(72) Inventor: **Dalmau Güell, José Maria**
Calle de los Caballeros 64
ES-08034-Barcelona (ES)

(74) Representative: **Curell Sunol, Jorge et al**
c/o Dr. Ing. M. Curell Sunol I.I. S.L. Passeig de Gràcia 65 bis
E-08008 Barcelona (ES)

(54) A device for positioning a yarn relative to a needle in a knitting machine.

(57) The device comprises sinkers (16), each of which is located in one of the needle bed tricks (4), juxtaposed to the needle and jack of the same trick. Each sinker is terminated at the top end thereof with at least one bevel and has a second butt (18) following a camtrack adapted to cause the sinker to rise and descend. A projection (100) of the sinker and the engagement of a thrust cam (114) on a third sinker butt (110) cause the sinker to rock slightly on each lengthwise movement.

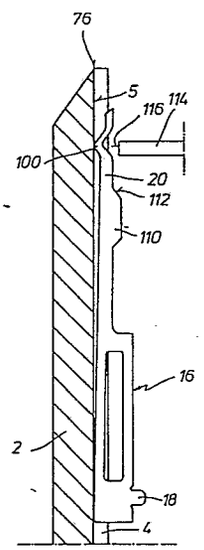

FIG. 1

EP 0 325 551 A1

Description

A DEVICE FOR POSITIONING A YARN RELATIVE TO A NEEDLE IN A KNITTING MACHINE

The invention relates to a device for positioning a yarn relative to a needle in a knitting machine, the machine comprising: a lower needle bed provided with axial tricks, having a bottom and an upper edge; a needle housed in each trick and comprising a shank, a hook-shaped head and a rocking latch; a jack housed in each trick, aligned with the needle of the same trick and provided with a first butt; a sinker housed in each trick and capable of lengthwise movement in the trick, generally juxtaposed to the needle and the jack and comprising a second butt and an upper portion having a rear edge facing the needle bed and a front portion, said upper portion being terminated at the upper end thereof by at least one bevel extending downwardly from the front edge towards the rear edge; a first series of camplates, facing the lower needle bed and being movable relative to said needle bed, each camplate comprising a plurality of cams defining first camtracks for said first butt and a second camtrack which is traversed by said second butt whereby said sinker is moved lengthwise up and down; and an upper needle bed having a lower edge, there being defined between the said lower edge and the upper edge of the lower needle bed a passage of generally constant width.

In sweater machines, particularly of the links-links type and also in the disc and cylinder machines, problems are encountered in the knitting process, associated with the capture of the yarn by the needles and associated also with the control of the newly formed stitches and floating yarns. These problems limit the machine's theoretical performance and reduce the reliability of the knitting process. Herein, the upper needle bed means the upper cylinder when referring to links-links type machines and means the disc when referring to disc and cylinder machines.

In fact, the following problems are known to exist with these machines:

There is no automatic hooking-up and hand hooking-up is required each time the fabric falls to the floor. There is no aid either fully to guarantee that the newly formed stitches will move inside the lower needle bed and not be reknitted in following courses.

In the case of tucking, the yarn capture is rather unreliable and the aid of the latch of the adjacent needle is required which, on closing, diverts the yarn and facilitates its capture by the needle knitting the tuck stitch. What is said here is applicable to links-links machines.

There is no control either over the floating yarn produced between two tuck stitches, particularly, when the float is large, there is the risk that one of the intervening needles, on rising, may pass behind the float and capture yarn, instead of passing in front of the floating yarn.

When a needle with one or more tuck stitches on its shaft is drawn down, the latch may easily pass under one of them and knit, whereby it would not tuck.

Although a large number of the aforesaid problems have been overcome in the plain knitting machines with conventional sinkers, no embodiment has been disclosed up to date applied to links-links or disc and cylinder type sweater machines compatible with the specific functions of their knitting processes and, furthermore, physically compatible with the mechanisms (stitch adjustments, stripers, etc) characterising these machines.

The aforesaid problems are substantially overcome by the incorporation of the sinker referred to above.

Nevertheless, there ie one aspect in which the desired result has not been attained. Said aspect is the leading of the knitted fabric towards the inside of the lower cylinder through the passage between the facing edges of the upper needle bed and the lower needle bed.

The objective pursued is attained by a device of the abovementioned type characterised in that said sinker is provided with: a generally triangular projection located on said upper portion and extending from said rear edges; and a third butt extending from the front edge of the sinker, there being a thrust cam which during the lengthwise upward movements of the sinker engages the said third butt and pushes it towards the bottom of the trick whereby the sinker may rock between a first lower position in which said projection engages the bottom of said trick, causing the sinker to be inclined relative to said bottom and a second upward position in which said projection extends above the upper edge of the trick and the rear edge of the sinker is engaged with the said bottom of the trick.

The rocking of the sinker due to its special configuration facilitates the insertion of the knitted fabric in the said space.

Further details of the invention will be disclosed in the following description where reference is made without any limitating intention to preferred embodiments in the accompanying drawings. In the drawings:

Figure 1 is an elevation view of a sinker located in a trick of a vertical needle bed of a links-links knitting machine, the sinker being shown in the first lower position thereof, other members also housed in the trick having been deleted for clarity.

Figure 2 is a view, on a larger scale, of the upper portion of the sinker of Figure 1.

Figure 3 is a similar view to Figure 1, but of a second embodiment of the sinker, the latter being in the upper position thereof, said embodiment being applicable to cylinder and disc machines.

Figure 1 shows a needle bed formed by a lower cylinder 2, shown partly in section through one of the tricks 4 thereof, said tricks being disposed successively around said cylinder. In each of the tricks, there is also a needle, not shown, associated in its

movement with a jack, also not shown, said jack having first butt. There is also contemplated the existence of a second rockable jack (not ahown), the rocking of which causes selection or otherwise of the corresponding needle as is well known in the state of the art.

The trick 4 has a bottom 5 and the cylinder 2 has an upper edge 76 to be referred to hereinafter. An upper cylinder, not shown, has a lower edge which defines, with the upper edge 76, a passage of generally constant width, through which the knitted fabric passes to the inside of the cylinder 2.

Figure 3 illustrates members similar to those described with reference to Figure 1, although for a disc and cylinder machine, there being seen therefore an upper needle bed formed by a needle disc 7 having a peripheral edge 78. There is likewise defined between the edges 76 and 78 the passage 80, referred to above.

As stated above, in the trick 4 there has been drawn only one sinker 16 which is longitudinally movable within the trick. The sinker 16 is generally juxtaposed to the needle and jack, although the movements of the sinker are independent of those of the needle and jack.

Each sinker 16 is provided with a second butt 18 and the upper portion 20 of the sinker is seen to have (Figure 2) a rear edge 22 facing the bottom 5 of the trick 4, and a front edge 24. In the links-links machine, the upper portion is terminated, at the top end thereof, with a first bevel 26 extending downwardly from the upper end 27 of the front edge 24 towards the rear edge 22.

The sinker 16 is also provided with a generally triangular shaped projection 100. The foregoing term includes the case in which the outstanding apex of the triangle is slightly flattened, to give the shape of a trapezium having a shorter parallel side of limited length.

In the embodiment of Figures 1 and 2, the projection 100 is at a lower level than the first bevel 26, whereby the upper and lower edges 102 and 104 extend from said rear edge 22. This embodiment is complemented by a recess 29, which is associated with sensing means, beyond the scope of the present invention. In correct positions of the sinker 16, the recess 29 avoids an interference between the sinker and the sensing means, there being instead contact between the sinker and the sensor when the former is in an incorrect position. The described embodiment of the projection is particularly appropriate for machines having a lower cylinder 2 and an upper cylinder.

In the embodiment of Figure 3 (for disc and cylinder machines), the projection 100 is the headpiece of the sinker 16 and the highest extremity of the upper edge 106 of the projection 100 coincides with the end 27 of the front edge 24. The lower edge 108 of the projection, in turn, extends from the rear edge 22 of the sinker.

In both embodiments, the sinker 16 is provided with a third butt 110 extending from the front edge 24. Preferably, the transition of the upper end of said butt 110 towards the front edge 24 is formed by a sloping portion 112. The butt 110 is engageable by a thrust cam 114 the front edge 116 of which does not reach the front edge 22 but does reach the butt 110.

As stated above, the second sinker butt 18 passes through second camtracks. Said path causes the sinker 16 to move lengthwise upwardly and downwardly.

Owing to the projection 100, when the sinker 16 is in a first downward position, the projection bears against the bottom 5 of the trick and the sinker 16 is slightly inclined relative to said bottom (Figure 1).

When the sinker rises, it attains a second upward position (Figure 3) in which the projection 100 emerges above said upper edge 76. During the upward movement, the thrust cam 114 engages first the sloping portion 112 and then finally engages the terminal edge 118 of the butt 110 whereby the sinker 16 is pushed such that the rear edge 22 is moved to bear against the bottom 5 of the trick 4. Obviously, during the excursions of the sinker, it moves between one and the other of said positions.

As is disclosed in the co-pending Spanish patent application nu 8702806, of the present applicant, the upper bevels of the sinker engage the yarn being knitted. The following results are obtained thereby.

In links-links type machines, it is guaranteed that all the needles reliably capture the yarn, it being achieved that even the needles tucking capture the yarn without needing the aid conventionally provided by the latch of the adjacent needle.

It is guaranteed that the floating yarn formed between two tucking needles will always pass behind the intervening needles not tucking.

The tuck stitches are adequately pressed against the shank of the needle to prevent the needle latch from passing through the loop on the needle being drawn down.

Automatic hooking-up of the fabric is facilitated.

The knitted fabric, even with many consecutive tuck stitches, is taken up by the cloth beam without having to have recourse to excessive drawing tensions.

The presence of the projections 100 and the consequent rocking of the sinkers 16 improves the action conductive to the knitted fabric going through the inside of the lower cylinder through the passage 80 formed by the edges 76 and 78.

Claims

1.- A device for positioning a yarn relative to a needle in a knitting machine, the machine comprising: a lower needle bed provided with axial tricks (4), having a bottom (5) and an upper edge (76); a needle housed in each trick (4) and comprising a shank, a hook-shaped head and a rocking latch; a jack housed in each trick (4), aligned with the needle of the same trick (4) and provided with a first butt; a sinker (16) housed in each trick (4) and capable of lengthwise movement in the trick (4), generally juxtaposed to the needle and the jack and comprising a second butt (18) and an upper portion (20) having a rear edge (22) facing the needle bed and a front portion (24), said upper

portion (20) being terminated at the upper end thereof by at least one bevel (26, 30) extending downwardly from the front edge (24) towards the rear edge (22); a first series of cam plates, facing the lower needle bed and being movable relative to said needle bed, each camplate comprising a plurality of cams defining first camtracks for said first butt and a second camtrack which is traversed by said second butt (18) whereby said sinker (16) is moved lengthwise up and down; and an upper needle bed having a lower edge (78), there being defined between the said lower edge (78) and the upper edge (76) of the lower needle bed a passage (80) of generally constant width, characterised in that said sinker (16) is provided with: a generally triangular projection (100) located on said upper portion (20) and extending from said rear edge (22); and a third butt extending from the front edge (24) of the sinker (16), there being a thrust cam (114) which during the lengthwise upward movements of the sinker (16) engages the said third butt (110) and pushes it towards the bottom (5) of the trick (4) whereby the sinker (16) may be moved between a first lower position in which said projection (100) engages the bottom (5) of said trick (4), causing the sinker (16) to be inclined relative to said bottom (5), and a second upward position in which said projection (100) extends above the upper edge (76) of the trick (4) and the rear edge (22) of the sinker (16) is engaged with the said bottom (5) of the trick (4).

2.- The device of claim 1, characterised in that said projection (100) is constituted by a headpiece of the sinker (16) and is provided with an upper edge (106) having an end (27) on said front edge (24) and a lower edge (108) having an end of said rear edge (22).

3.- The device of claim 1, characterised in that said projection (100) is at a lower level than said first bevel (26) and is provided with an upper edge (102) and a lower edge (104), each of which extends from said rear edge (22).

4.- The device of claim 2, characterised in that said front edge (24) is provided with a recess (29) generally at the same level as said projection (100).

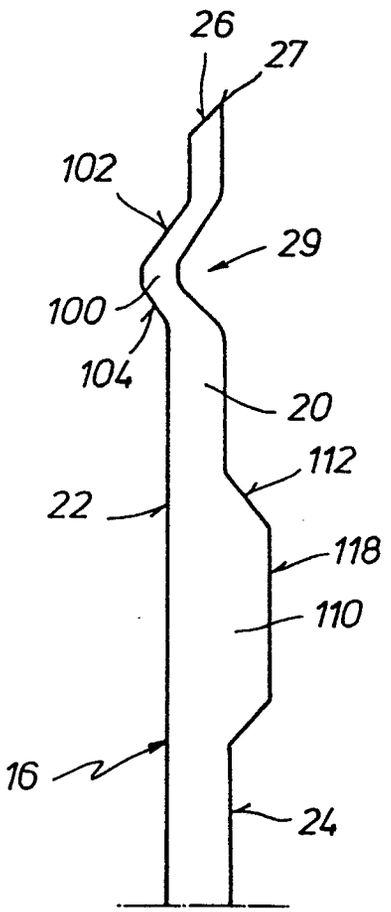
26
27
102
29
100
104
20
112
22
118
110
16
24

FIG. 2

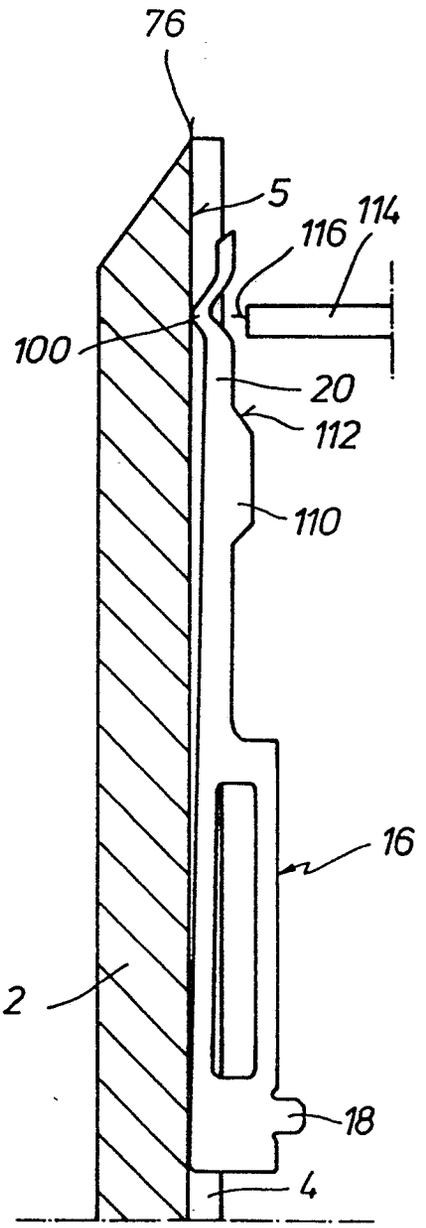
76
5
116
114
100
20
112
110
16
2
18
4

FIG. 1

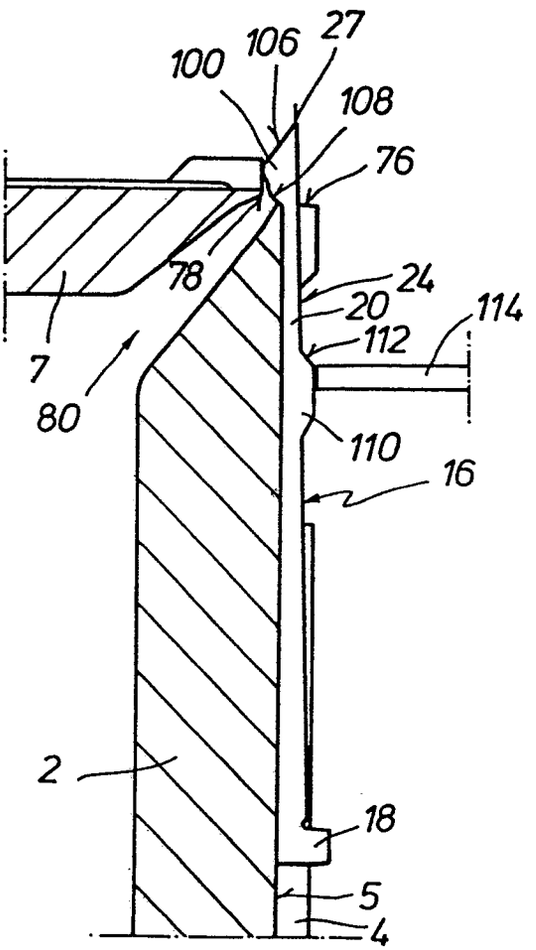

FIG. 3

European Patent Office

EUROPEAN SEARCH REPORT

Application Number

EP 89 50 0005

DOCUMENTS CONSIDERED TO BE RELEVANT

Category	Citation of document with indication, where appropriate, of relevant passages	Relevant to claim	CLASSIFICATION OF THE APPLICATION (Int. Cl.4)
A	EP-A-0059919 (MEMMINGER MBGH)		D04B15/06
A	EP-A-0238797 (H. STOLL GMBH & CO)		
A	US-A-4180993 (MORRIS PHILIP)		

TECHNICAL FIELDS SEARCHED (Int. Cl.4)

D04B

The present search report has been drawn up for all claims

Place of search	Date of completion of the search	Examiner
THE HAGUE	03 MAY 1989	VAN GELDER P.A.

CATEGORY OF CITED DOCUMENTS

X : particularly relevant if taken alone
Y : particularly relevant if combined with another document of the same category
A : technological background
O : non-written disclosure
P : intermediate document

T : theory or principle underlying the invention
E : earlier patent document, but published on, or after the filing date
D : document cited in the application
L : document cited for other reasons

& : member of the same patent family, corresponding document

EPO FORM 1503 03.82 (P0401)