J. B. MELTZ.

TWISTING MACHINE.

APPLICATION FILED DEC. 28, 1920.

1,438,322.

Patented Dec. 12, 1922.

5 SHEETS—SHEET 1.

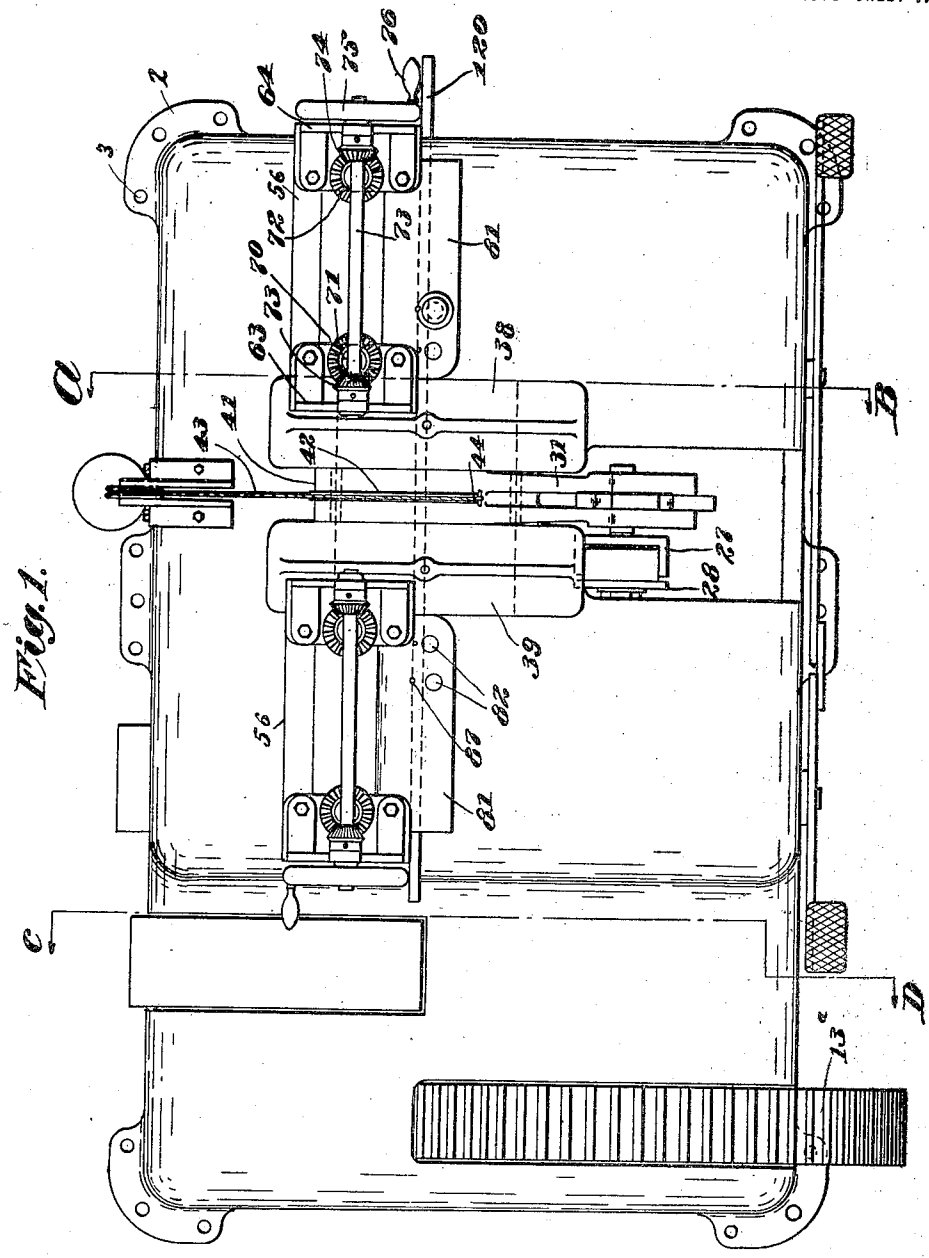

Inventor
Julius B. Meltz
by Roberts, Roberts & Cushman
his Attorneys

J. B. MELTZ.

TWISTING MACHINE.

APPLICATION FILED DEC. 28, 1920.

1,438,322.

Patented Dec. 12, 1922.

5 SHEETS—SHEET 2.

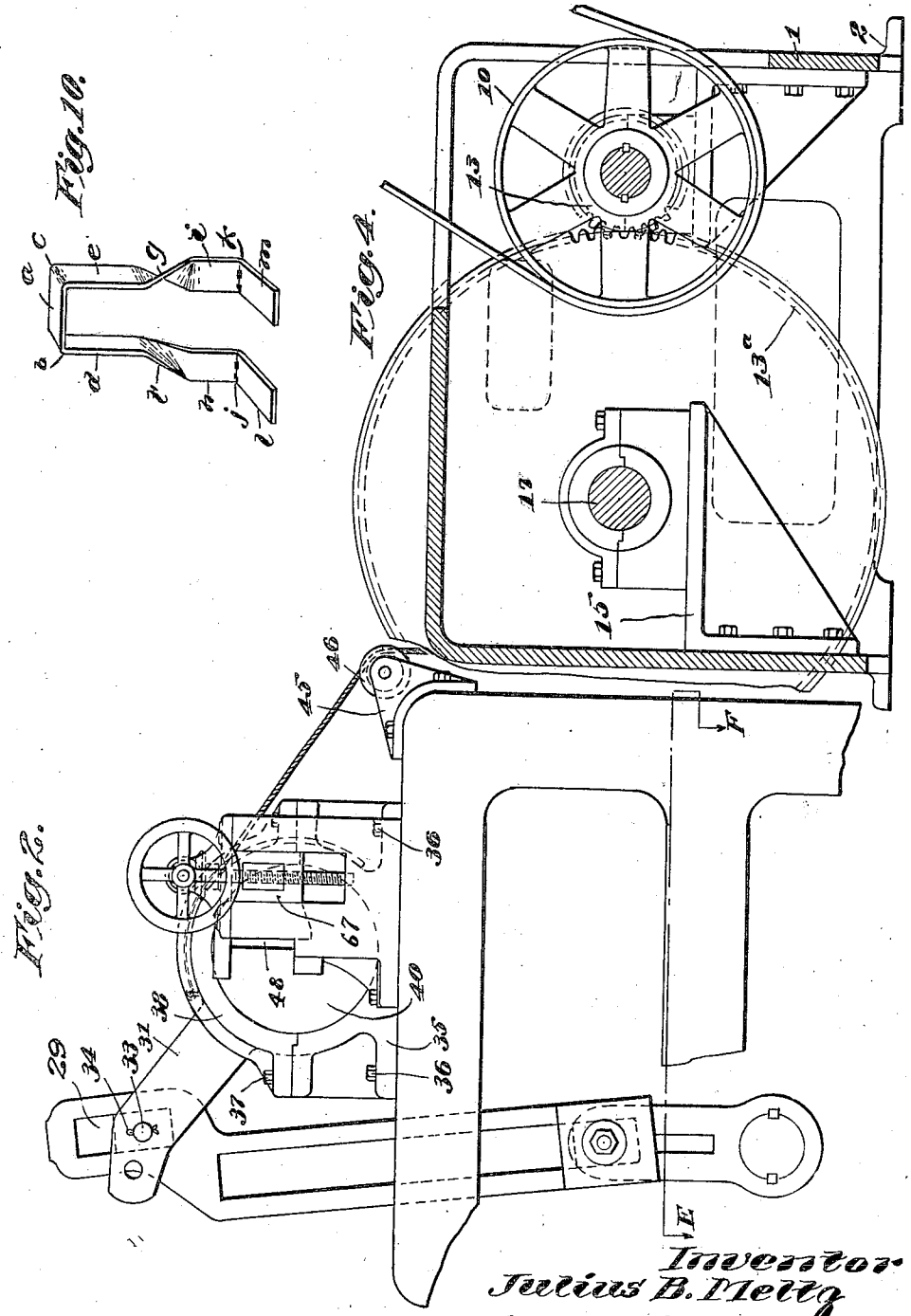

Inventor
Julius B. Meltz
by Roberts, Roberts & Cushman
his Attorneys

J. B. MELTZ.

TWISTING MACHINE.

APPLICATION FILED DEC. 28, 1920.

1,438,322.

Patented Dec. 12, 1922.

5 SHEETS—SHEET 3.

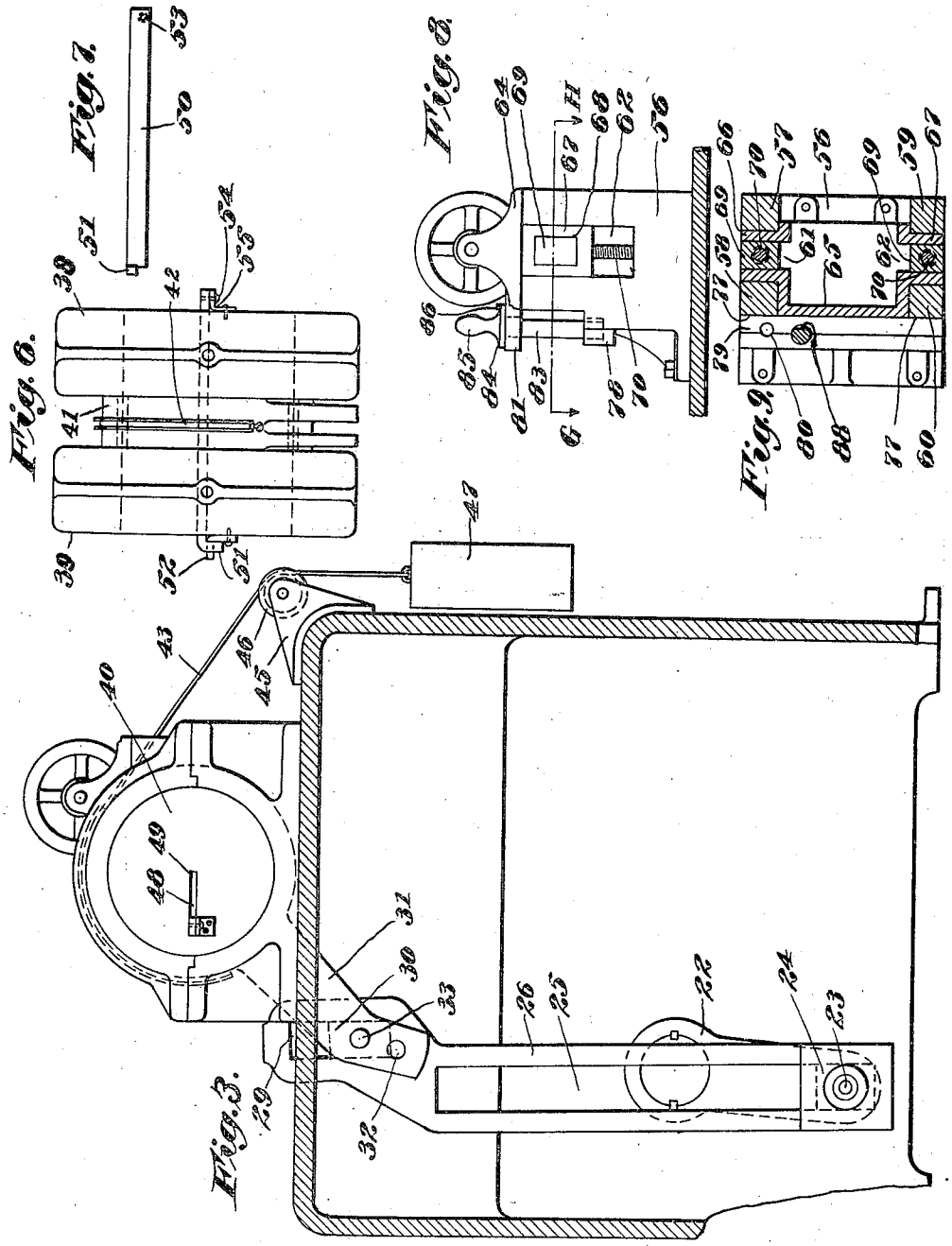

Inventor
Julius B. Meltz
By Robert, Robert & Cushman
His Attorneys

J. B. MELTZ.

TWISTING MACHINE.

APPLICATION FILED DEC. 28, 1920.

1,438,322.

Patented Dec. 12, 1922.

5 SHEETS—SHEET 4.

Fig. 5.

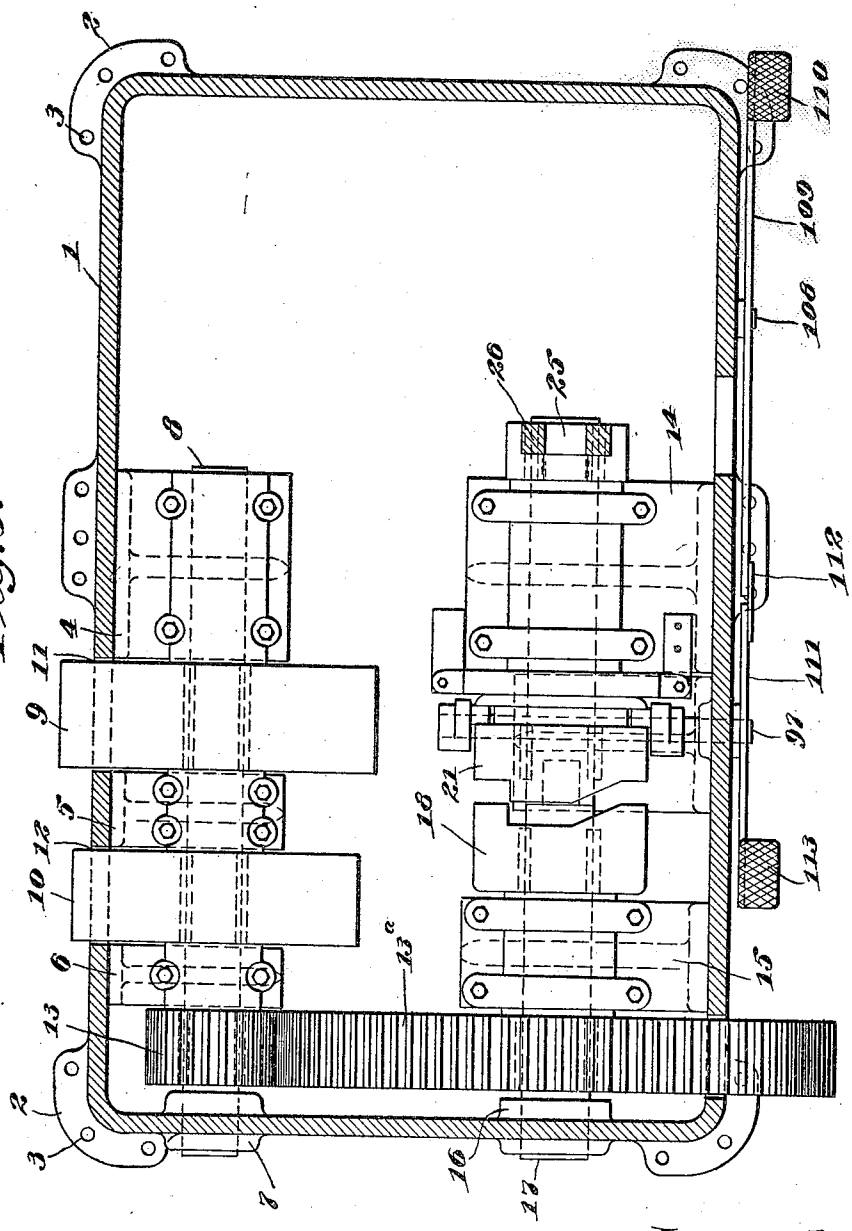

Inventor
Julius B. Meltz
by Roberts, Roberts & Cushman
his Attorneys

J. B. MELTZ.

TWISTING MACHINE.

APPLICATION FILED DEC. 28, 1920.

1,438,322. Patented Dec. 12, 1922.

5 SHEETS—SHEET 5.

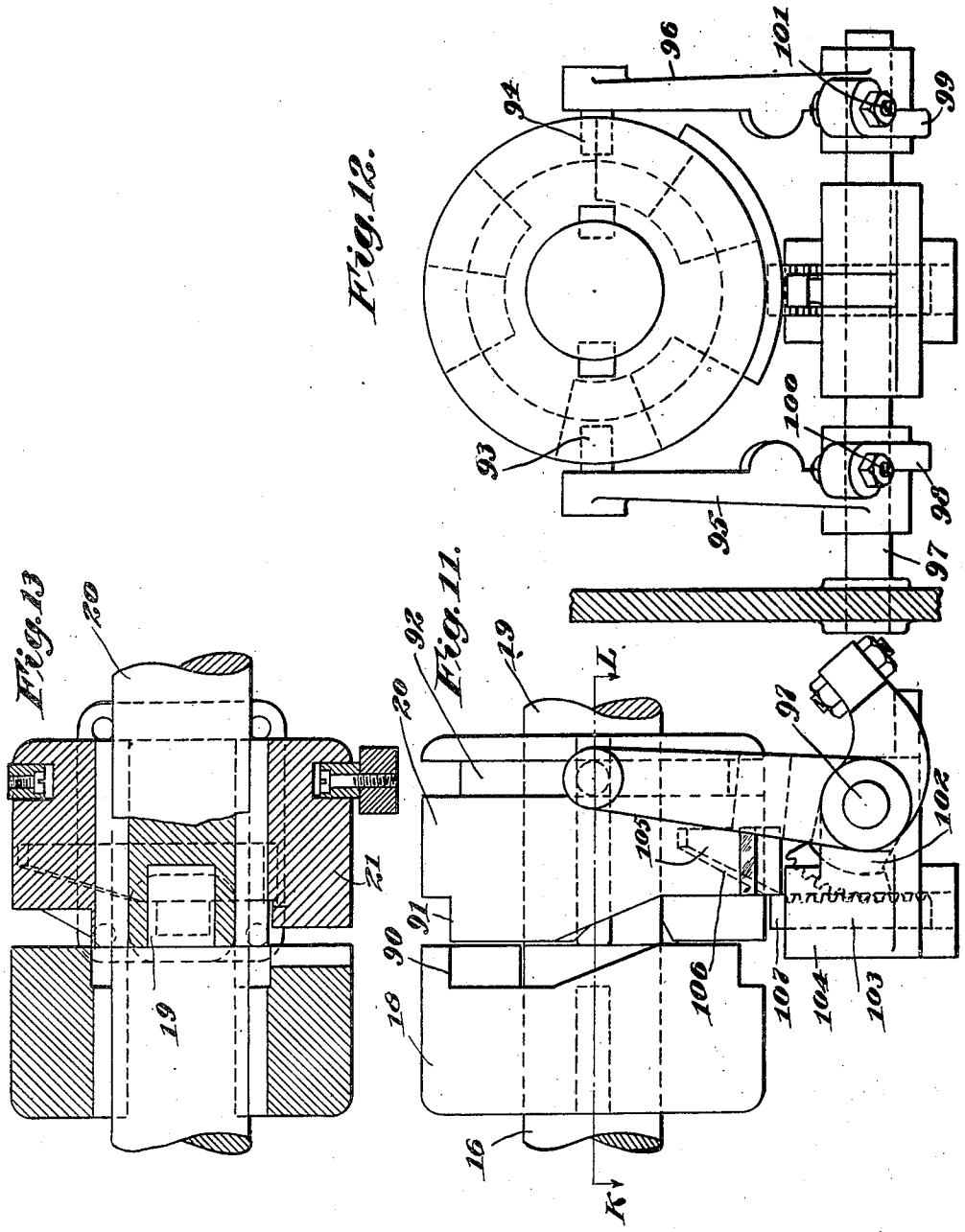

Inventor
Julius B. Meltz
By Roberts, Roberts & Cushman
His Attorneys

Patented Dec. 12, 1922. 1,438,322

UNITED STATES PATENT OFFICE.

JULIUS B. MELTZ, OF EVERETT, MASSACHUSETTS, ASSIGNOR TO A. L. SMITH IRON WORKS, OF CHELSEA, MASSACHUSETTS, A CORPORATION OF MASSACHUSETTS.

TWISTING MACHINE.

Application filed December 28, 1920. Serial No. 433,629.

To all whom it may concern:

Be it known that I, JULIUS B. MELTZ, citizen of the United States of America, and resident of Everett, in the county of Middlesex and State of Massachusetts, have invented new and useful Improvements in Twisting Machines, of which the following is a specification.

This invention relates to mechanism for twisting strips of sheet material or bars and more particularly to a machine whereby a metallic bar may have imparted thereto a twist in either a right or left hand direction at the will of the operator. While a machine of this character may be found of general utility wherever it is desired to twist material such as specified, its primary purpose is to facilitate the manufacture of hangers such as are employed for supporting the floor or roof timbers in masonry building construction.

Such hangers commonly comprise a stirrup of flat bar or strap metal bent to form a bottom member and two spaced, upwardly extending side members which are substantially parallel one to the other at points adjacent said bottom. The side members, substantially midway of their lengths, are twisted in opposite directions whereby to cause their outer ends to lie in planes at right angles to their lower portions, and at the outer ends of said side members the metal is bent to form supporting hooks. The several bending and twisting operations incident to the manufacture of such hangers are commonly performed by hand, the process being thus necessarily slow and laborious.

The principal object of the present invention is to provide mechanism capable, in a simple and expeditious manner of imparting to a strip or bar the twists necessary for the formation of a hanger of the type above described. To this end there may be provided a pair of clamping devices in either of which the metal bar may be firmly held, and a duplex twisting head located between such clamping devices and capable of engaging and twisting a bar held in either or both of them. By the arrangement just indicated it is possible simultaneously to impart to a bar held in one of the clamping devices a right hand twist and to a bar held in the other clamping device a left hand twist and by interchanging the bars in the clamping devices and repeating the operation each bar may be provided with a twist opposite to that first imparted thereto.

It is desirable that a machine in accordance with the present invention, shall be capable of operating upon material of different thicknesses or widths and a further object of the present invention is to provide clamping and twisting means adaptable to work of different dimensions. To this end the clamping device may comprise a fixed jaw and a jaw movable toward and from the same for clamping the work edgewise against the fixed jaw, the range of movement of such movable jaw being sufficient to accommodate work of any desired width. Cooperating with such jaws may be work positioning abutments engageable with the sides of the work. One of such abutments may be fixed and the other may comprise a flat-sided pin engageable with selected ones of a plurality of pairs of aligned openings, permitting the pin to be placed at desired distances from the fixed abutment. The twisting device may comprise a slot into which the work may be thrust, and for limiting the size of such slot, interchangeable blocks or bars may be supplied which, by means of suitable retaining means, may be secured in said slot.

It is of course necessary that the work be withdrawn prior to the return of the twisting device to normal position, as otherwise the material would be restored to its original condition upon reversal of the twisting movement. It is desirable however, to actuate the twisting devices through the agency of a rotating shaft. A further object of the present invention is to provide connections between a rotating shaft and the twisting devices such that the latter may be positively turned through the desired angle and that thereupon the rotation of the shaft will become ineffective to impart further movement to said twisting devices, permitting them to be restored to initial position by other means. To this end the connections may comprise a crank arm and a sliding block linkage, together with a gravity actuated member for restoring the twisting devices to operative position.

One form of mechanism suitable for carrying into effect the foregoing objects is illustrated in the accompanying drawings in which:

Fig. 1 is a plan view of the machine showing a piece of work in position to be operated

on while held by the right hand clamping device;

Fig. 2 is an end elevation, partly broken away, of the right hand end of the machine;

Fig. 3 is a vertical cross section substantially on the line A—B of Fig. 1;

Fig. 4 is a transverse section on the line C—D of Fig. 1;

Fig. 5 is a horizontal cross section on the line E—F of Fig. 2;

Fig. 6 is a plan view of the twister head mechanism shown as removed from the machine;

Fig. 7 is a detail elevation of an adjusting element employed with the twister head;

Fig. 8 is a detail end elevation of one of the clamping devices employed for holding the work in the machine;

Fig. 9 is a cross section on the line G—H of Fig. 8;

Fig. 10 is a perspective view illustrating in inverted position a hanger such as is made by this machine;

Fig. 11 is a front elevation;

Fig. 12 is an end elevation viewed from the right of Fig. 11; and

Fig. 13 is a cross section on the line K—L of Fig. 11, illustrating further details of the clutch mechanism.

Referring now to the drawings for a more detailed explanation of the device, Fig. 10, shows a hanger of the type for use in the making of which, this machine is intended. This hanger is formed of a strip of sheet material or from a flat bar and has the bottom portion *a*, upon which the timber to be supported may rest. At *b*, *c*, the strip is bent at substantially right angles to form a pair of upwardly extending legs *d*, *e*, arranged substantially parallel, one to the other. At the points *f*, *g*, the legs *d*, *e*, are twisted in opposite directions whereby to cause the upper portions *h*, *i*, of said legs to lie in the same plane and at right angles to the lower portions of the legs. At *j*, *k*, the legs are further bent at right angles to the portions *h*, *i*, to form the hook members *l*, *m*. In the use of such device, the members *l*, *m*, are engaged with the masonry or with a supporting girder and the timber to be supported is positioned within the legs *d*, *e*, and resting upon the bottom piece *a*. The present machine is intended for forming the twist at *f*, *g*, respectively.

1 is the frame of the machine, herein disclosed as comprising a casting forming a casing within which the drive mechanism is housed. This casing may, if desired, be provided with feet 2 having openings 3 through which bolts may be passed for securing the frame to the floor.

Upon the inner side of the casing at the rear thereof are provided a series of brackets 4, 5, 6 supporting bearings having journal openings which align with a journal opening in a boss 7, formed upon the left hand wall of the casing. Journaled to turn in said openings is a power shaft 8 having fixed thereon pulleys 9, 10 which may be of different diameters. The pulleys 9 and 10, extend through openings 11, 12 respectively in the walls of the casing and are intended to be engaged by a driving belt receiving its power from any suitable source. By the provision of pulleys 9, 10 of different diameters the speed of the shaft 8 may be varied by shifting the belt from one to the other. 13 is a pinion secured to the shaft 8 and located between the bracket 6 and boss 7.

Upon the inner surface of the front wall of the machine casing are a pair of brackets 14 and 15 respectively carrying bearings provided with journal openings which align with a journal opening in a boss 16 upon the left hand wall of the casing.

17 is a drive shaft journaled to turn within the bracket 15 and boss 16, such drive shaft having secured thereon the driven element 18 of a clutch. The right hand extremity of the shaft 17 may if desired be of reduced diameter as indicated at 19 (Fig. 13) such portion being journaled within a socket formed in the adjacent end of a driven shaft 20 journaled to turn in the bearings carried on bracket 14, the latter bearing being of substantial length. 21 is the driven element of the clutch, such element being splined upon the left hand portion of shaft 20, whereby to permit it to slide longitudinally thereof and into and out of engagement with the drive element 18. The mechanism for actuating such member 21 will be hereinafter described in detail.

Fixed upon the right hand extremity of the shaft 20 is a crank arm 22 having a crank pin 23 journaled to turn in a slide block 24. The block 24 slidably engages a slot 25 formed in a connecting rod 26 which extends upwardly through an opening in the upper surface of the machine casing. As herein disclosed the slot 25 is of a length substantially greater than twice the length of the crank arm 22. For guiding the crank pin 23 in its sliding movement along the slot 25, a yoke member 27 (Fig. 1) may be provided, such yoke embracing the edges of the connecting rod 26 and sliding therealong. This yoke has a central opening through which passes the crank pin, and upon the opposite side of the connecting rod may be arranged a plate 28 also having an opening for the pin. The crank pin passes through the openings in yoke 27, the block 24, and the plate 28, and may be provided with nuts or other securing means at its opposite ends.

The upper end of the connecting rod 26 is provided with a slot 29 in which slides a block 30. 31 is a lever arm bifurcated to

embrace the upper end of the connecting rod 26 and having a plurality of openings as 32 spaced apart therein. A pin 33 passes through a selected one of the openings 32 and journaled to turn in the block 30, the pin 33 being retained in position by means of cotters 34 or in other desired manner.

Secured to the upper surface of the machine casing are a pair of brackets 35 of which one only is herein illustrated, such brackets being secured to the machine frame by means of bolts 36 or in other desired manner.

Secured to the upper surface of the brackets 35, by means of bolts 37 are cover members 38, 39 respectively. The brackets 35 with their respective cover members are bored out to provide aligned journal openings in which is mounted to turn a short heavy shaft 40.

The brackets 35 with their cover members are spaced apart as clearly indicated in Fig. 1, and at 41 is indicated a collar fast to the shaft intermediate the bearings therefor. This collar member may be keyed to the shaft or shrunk thereon, or if desired the shaft together with said collar may be formed integral as by casting or forging.

By arrangement of the collar 41 between the shaft bearings the shaft is prevented from moving endwise in such bearings. The lever arm 31 hereinbefore referred to, is fixed to or forms an integral part of the collar 41 and thus through the connections hereinbefore described, the shaft 41 may be rocked in its bearings.

Upon the outer surface of the collar 41 is formed a pulley groove 42. 43 is a flexible connection, herein shown as a rope or cord, engaging the pulley groove 42 and having one end secured to the collar 41 in any suitable manner as indicated at 44.

45 is a bracket secured to the rear portion of the machine frame and having journaled therein a guide pulley 46. The cord 43 passes rearwardly and downwardly over the guide pulley 46 and has fixed to its lower extremity a heavy weight 47. With this arrangement the tendency of the weight 47 is to turn the collar 41 and therewith the shaft 40 in a clock-wise direction as seen in Figure 3.

Extending longitudinally of the shaft 40 is a narrow slot 48, such slot being of rectangular form as the present machine is intended for twisting bars or rectangular cross section. It is clear however, that for manipulating bars of other cross section, the shape of the slot would be varied accordingly. This slot is so arranged that one corner 49 thereof lies substantially coincident with the axis of the shaft, and in the normal position of the parts, this slot occupies a vertical position. For restricting the depth of the slot, if for any reason it is desired to twist material of a width less than the normal depth of the slot, bars such as 50 (Fig. 7) may be employed. These bars may be furnished in assorted widths and may be placed within the slot 48 in the manner indicated in Fig. 3.

The bar 50 is provided with an angularly extending toe 51, engageable behind a bracket 52 secured to the shaft 40 at one end thereof. The opposite end of the bars 50 is provided with an opening 53, through which is passed a pin 54 engaging an opening in a bracket 55 secured to the opposite end of the shaft 40 adjacent the slot 48. By the insertion of a bar 50 of the proper dimensions, the area of the slot 48 may be restricted at will and thus such slot may be adapted to snugly receive material of various widths for twisting.

Mounted upon the machine casing adjacent to each end of the shaft 40 is a work clamping device of which the details are shown in Figs. 1, 8 and 9. As these clamping devices are of substantially duplicate construction it is necessary to describe but one of them in detail.

Each of the clamping devices comprises a supporting bracket 56 having extending upwardly from its opposite ends the spaced guide members 57, 58, 59 and 60 respectively.

These guide members form therebetween guide ways 61, 62 at opposite ends of the bracket. Secured to the upper ends of the guide members 57, 58; 59, 60 respectively are brackets 63, 64, said brackets serving to close the upper ends of the slots 61 and 62.

65 is a frame located between the pairs of guide members above described, and provided at its opposite ends with lugs 66, 67 which slidably engage the guide ways 61, 62 respectively. The lugs 66, 67 are each provided with an opening, as 68, within which is seated a nut member 69 having an internally screw threaded bore.

Engaging each of the nut members 69 is a screw threaded shaft 70, said shafts extending upwardly through openings in the brackets 63, 64 and having secured upon their respective upper ends beveled gears 71, 72.

73 is a shaft journaled in bearings in the respective bracket members 63, 64 and having beveled gears 73, 74 fixed thereon and meshing with the beveled gears 71, 72 respectively. Upon the outer end of the shaft 73 is fixed a hand wheel 75, having if desired a handle 76 whereby it may be turned. By means of the hand wheel 75 and the connections described the two nut members 69 may be simultaneously adjusted and therewith the frame 65 may be moved vertically along the guideways 61, 62.

Projecting forwardly from the front surface 77 of the guide members 58, 60 is

a bracket 78, said bracket providing an upper surface 79 upon which the edge of the bar to be twisted may be supported. A series of openings as 80 may be provided in the shelf 78, such openings being located at different distances from the plane of the front surfaces 77 of the guide members 58, 60.

Frame 65 has projecting outwardly from its upper portion, a shelf-like member 81 which overhangs the shelf 78 and between which and the surface 79 the material to be twisted may be clamped.

In the member 81 are provided openings such as 82 corresponding to the openings 80 and aligning therewith. The pairs of vertically aligned openings thus formed are adapted for the reception of a removable pin such as 83. This pin is provided with an enlarged head 84 having a handle 85, and for preventing such pin from turning on its axis, a stud 86 is secured in the head 84 and projects therefrom for engagement with suitable openings such as 87 in the member 81. The pin 83 is provided with a flat or slabbed off surface 88, which when properly positioned, lies substantially parallel to the plane of the surfaces 77 before referred to.

As thus arranged the flat surface of the pin engages one face of the material to be twisted, while the opposite face of the material lies in contact with the surface 77. By moving the pin 83 from one set of openings 82, 80, to another, it may be adapted to hold work of different thickness in position against the surfaces 77, while by the manipulation of the hand wheel 75 the movable jaw member 81 may be caused to firmly clamp the material in position.

The clutch mechanism, whereby the above described devices are actuated, is shown in detail, Figs. 11 to 13 inclusive. As above stated, the member 18 which forms the drive element of the clutch is fixedly secured to the drive shaft 16 while the driven element 20 of the clutch is splined upon the shaft 19 to move longitudinally thereof.

The member 18 is provided with a shoulder 90 engageable with a shoulder 91 of the member 20 for driving the latter. A circumferential groove 92 is formed in the member 20 and with said groove engage rolls 93, 94 carried by a pair of arms 95, 96 respectively. The arms 95, 96 are loosely supported upon a shaft 97 carried in suitable bearings in the machine frame.

98, 99 are a pair of arms fixedly secured to the shaft 97 and provided with adjustable members 100, 101 adapted, upon rocking of the shaft 97, to come into contact with portions of the arms 95, 96 respectively. At a point between the arms 98, 99, the shaft 97 is provided with a gear segment 102 which meshes with rack teeth formed on a bar 103 guided for vertical sliding movement in a bracket 104 secured to the machine frame. 105 is a cam projection carried by the outer surface of the clutch element 20, and having a wedge cam face 106 which may at intervals engage with the upper portion 107 of the bar 103. Upon the front side of the machine frame, as seen in Fig. 5, is pivoted at 108 a treadle lever 109 having a foot engaging element 110.

Shaft 97 projects forwardly through the machine casing and has fixedly secured thereto a lever member 111, such lever member being connected to the left-hand end of the treadle lever 109 by means of a suitable link 112.

If desired the lever 111, at its opposite end may also be provided with a foot engaging element 113. Spring means, not shown, tends normally to rock the shaft 97 in a clockwise direction.

Upon rocking of the shaft 97 in a counterclockwise direction by means of treadle member 110 or 113, the bar 103 will first be depressed through the action of the sector 102, and thereafter the members 100, 101 will come into contact with their respective arms 95, 96 and thus move the clutch element 20 into driving engagement with the element 18.

After actuation of the treadle member 110, the operator immediately removes his foot therefrom, whereupon said treadle will rise under the action of its spring, thus rocking the shaft 97 in a clockwise direction and bringing the end 107 of bar 103 into position whereby it may be engaged by the cam surface 106. As soon as such cam surface engages the bar 103 it serves to positively move the clutch element 20 out of engagement with the element 18, thus stopping the rotation of the driven shaft 19 after one revolution thereof.

The lengths of the crank arm 22 and of the lever arm 31 are so proportioned, that together with the slots 25 and 29 in the connecting rod, they serve to impart to the shaft 40 substantially a quarter turn as the crank 22 moves from the position shown in Fig. 2 to that shown in Fig. 3.

As the crank 22 continues to turn in a counterclockwise direction as seen in the latter figure, the connecting rod 26 tends merely to swing about the pin 33 as a center, the block 24 sliding freely in the slot 25. The shaft 40 thus remains at rest while the arm 22 completes its revolution.

In the operation of the device the operator may insert a bar as 120 (Fig. 1) beneath the movable jaw 81 of the clamping device, permitting its narrow edge to rest upon the surface 79.

The operator may at the same time adjust the pin 83 in accordance with the thickness of the work. In starting the operation, the slot 48 is in vertical position and

thus the work may be freely slipped therein and passed completely through the shaft if desired as indicated in Fig. 1.

Upon manipulation of the treadle 110, the clutch mechanism and various connections previously described, operate as above outlined to turn the shaft 40 to the position shown, Fig. 3, thus imparting to the work at a point between a pin 83 and the adjacent end of the shaft 40, a quarter turn or twist. After the shaft 40 has stopped, the operator may, by removing pin 83, readily remove the work from the machine, whereupon the weight 47 returns the shaft 40 to the position shown in Fig. 2, ready for the reception of another piece of work.

As the clamping devices are arranged upon opposite ends of the shaft, it is evident that work may be inserted from either direction and that in accordance with the placing of a pin 83 in the holes 80, 82 of one or the other of the clamping devices, the work will be twisted between such clamping device and the adjacent end of the shaft. Furthermore, it will be evident that the work will be twisted in a right or left hand direction, in accordance with a particular clamping device which is then being employed. The shaft with its slot thus constitutes a duplex twisting element. Moreover by placing pins 83 in both of the clamping devices, and inserting separate pieces of work into the slot in the shaft from either end thereof, it is possible to impart right and left twists simultaneously to two such pieces of work.

The machine as thus constructed, is particularly well adapted to forming twists such as those indicated in the hanger illustrated in Fig. 10. The straight bars of material for forming such hangers may be introduced into opposite ends of the shaft 40 and the twists in each of said bars formed simultaneously, whereupon the bars may be withdrawn and interchanged, thus permitting the opposite twists also to be formed simultaneously in the two bars, after which the right angle bends may be formed in such bars in any desired manner.

Having thus described the invention in a preferred embodiment of the same, together with the mode of use thereof, what I claim and desire to secure by Letters Patent of the United States is:—

1. A clamping device for use in a machine for manipulating rectangular bars, comprising a fixed jaw for supporting the bottom face of a bar, a movable jaw for engaging the top face of said bar, and elements for engaging the opposite side faces of the bar, one of said elements comprising a removable abutment fitting in alined openings in said jaws.

2. A clamping device for flat bars comprising a fixed abutment for engaging one face of a bar, a removable pin for engaging the opposite face of the bar, and means for supporting said pin at selected distances from said fixed abutment.

3. In a device for clamping rectangular bars, a pair of normally fixed members providing a slot therebetween for the reception of a bar, and an adjustable member for varying the size of the slot in one dimension, means including a series of openings in said adjustable member providing for the removal of one of said fixed members and for its replacement at a different distance from the other of said fixed members for varying the size of the slot in a second dimension.

4. In a clamping device for use in a machine for manipulating flat bars, a support, a fixed abutment extending perpendicularly to said support and engageable with one side of a bar resting on the support, said support being provided with openings spaced at different distances from said abutment, and a removable pin engageable with a selected one of said openings and having a substantially flat surface disposed opposite said fixed abutment for contact with the opposite side of said bar.

5. In a clamping device, a fixed abutment having a clamping face, a pin having a flat side for forming an opposite abutment, means for supporting said pin in spaced relation to the clamping face of said fixed abutment and means for maintaining the flat side of said pin substantially parallel to said clamping face.

6. A clamping device for flat metal bars comprising a support upon which a bar may be placed on one edge, a clamping jaw movable toward and from said support for engaging the opposite edge of said bar, guide-ways for said clamping jaw, and normally fixed abutments forming a slot therebetween for the reception of said bar when resting on said support.

7. In a metal working machine, a clamping device comprising a support having spaced pairs of vertically extending guideways, a frame extending longitudinally between said pairs of guideways and having elements engaging the latter, a screw rod associated with each of said pairs of guideways, engaging elements carried by said frame, and means for simultaneously rotating said screw rods.

8. A twisting machine for manipulating bars, a clamp device for holding such bars having a fixed jaw of substantial length, a movable jaw cooperating therewith and means for supporting and actuating said latter jaw, comprising a frame to which said movable jaw is fixed, guide means engaging opposite ends of the frame, a pair of screw threaded rods engageable with threaded members carried by said frame adjacent the respective guide means, a bevel gear fixed

to each of said rods, a longitudinally extending shaft having gears meshing with said first named gears respectively, and a hand wheel for turning said shaft.

9. A clamp device for use in bending machines comprising a fixed support having spaced parallel guideways at each end thereof, a box-like frame having lugs at its opposite ends for engagement with said guideways, internally screw threaded nut members secured in the respective lugs, screw rods journaled in said fixed support and engaging the respective nut members, means for simultaneously turning said screw rods and a clamping jaw carried by said frame.

10. A twisting machine comprising means for holding the work, a rotatable shaft having a work engaging slot therein, means whereby one dimension of said slot may be varied, and means for rotating said shaft to twist the work.

11. In a twisting machine, a rotatable shaft having a slot therein, said slot being normally of greater height than width, and a device whereby the height of said slot may be reduced at will.

12. In a machine for manipulating flat bars, a bar engaging element having a narrow slot therein closed on four sides, an interchangeable member insertable in said slot whereby to restrict its depth and means for securing said member in position.

13. A machine of the class described comprising a rotatable shaft having a longitudinally extending rectangular slot therein, a removable bar constructed and arranged for insertion in said slot whereby to restrict the capacity of the latter, and means at each end of said shaft and engageable with said bar for securing it in operative position.

14. In combination a shaft having a longitudinally extending slot therein, an outstanding abutment member secured to said shaft at one end adjacent said slot, a bracket secured to the opposite end of the shaft adjacent said slot, said bracket having an opening therethrough, a bar extending through said slot and having at one extremity a lug for engagement with said abutment and at its opposite extremity an opening alignable with the opening in said bracket, and a removable fastener for engaging said aligned openings whereby to retain said bar within said slot.

15. A twisting machine having a duplex twisting head comprising a shaft provided with a longitudinal slot, spaced bearings for said shaft and means interposed between said bearings for turning said shaft, the opposite ends of said slot being free for the insertion of work therein from either direction.

16. A machine for twisting material comprising a shaft having an eccentric opening extending from end to end thereof, journals adjacent opposite ends of said shaft, means engaging said shaft intermediate said journals for positively turning the same in one direction, and a work holding clamp adjacent each end of said shaft.

17. A machine for twisting material comprising a pair of spaced clamping devices, and a duplex twisting head therebetween, said head comprising a shaft supported at both ends in bearings and having an opening at either end thereof into which material held in the corresponding clamping device may engage and means for imparting turning movement to said shaft.

18. A machine for manipulating flat bars comprising a rotatable bar engaging element having a narrow slot therein, an interchangeable member insertable in said slot whereby to restrict its depth, and means for securing said member in position.

19. In a machine of the class described twisting means comprising a rockable shaft having a lever arm fast thereto, a power driven crank, connections between said arm and crank for actuating the former whereby to turn the shaft, and gravity means acting in opposition to said power driven means and tending to turn said shaft in the opposite direction.

20. In combination in a machine for twisting metal bars, a twisting head comprising a turnable shaft, a lever arm fast to said shaft, a power driven crank, a crank pin thereon, a slotted connecting rod having one end pivotally secured to said lever arm and having said crank pin engaging within its slot, and means for imparting rotation to said crank, the parts being so constructed and arranged that a complete rotation of said crank will impart substantially a quarter turn to said shaft.

21. In a twisting device, a turnable shaft, power means including a rotatable crank for actuating said shaft, and connections between said shaft and said crank for transmitting movement to the former from the latter, said connections being so constructed and arranged that during substantially a half rotation of said crank said shaft will be turned substantially ninety degrees, and during the completion of its rotation by said crank, the shaft may remain substantially at rest.

22. In a twisting machine, a turnable work engaging shaft having a lever arm thereon, a rotatable crank having a crank pin, a block journalled on said crank-pin, a connecting rod having a longitudinal slot within which said block is free to slide, and pivotal connections between said rod and lever arm.

23. A twisting machine having a shaft having a lever arm fast thereto, a rotatable crank having a crank pin, means for imparting a single complete rotation to said crank, a connecting rod having a longitudinal slot

therein, a block freely slidable in said slot and pivotally engaging said crank pin, and lost motion connections between said rod and said lever arm.

24. In a twisting machine, a shaft, power means for turning said shaft through a partial rotation including a crank and link connection, a pulley groove on said shaft and a flexible element engaging said groove and having one extremity provided with a depending weight, said weight tending normally to turn said shaft in opposition to said power means.

25. In combination in a machine of the class described, a turnable twisting element, a lever arm on said element, power means operable through said arm to positively turn said element through a partial rotation and thereupon to release said element for restoration to initial position, and a flexible band having one extremity provided with a weight, said weighted band being constructed and arranged to restore said element to initial position upon release thereof by said power means.

26. A device of the class described comprising a turnable shaft, a weighted band having one extremity secured to said shaft, said band making a partial turn about said shaft, a lever arm fast to said shaft, a power shaft, and crank and link connections from said power shaft to said lever arm, said connections being operative to move said arm and shaft through a predetermined angle and thereupon automatically to become inoperative to oppose restoration of said shaft to initial position by said weighted band.

27. In a machine of the class described, twisting means comprising a turnable shaft, power means including a rotatable crank for actuating said shaft, and connections between said shaft and said crank for transmitting movement to the former from the latter, said connections being so constructed and arranged that said crank is effective to produce turning movement of said shaft only during a portion of its cycle of rotation.

28. In a machine of the class described, twisting means comprising a turnable shaft, power means including a rotatable crank for actuating said shaft, connections between said shaft and said crank for transmitting movement to the former from the latter, said connections being so constructed and arranged that a complete revolution of said crank produces only a partial turning of said shaft, and gravity means for restoring said shaft to its original position.

Signed by me at Boston, Massachusetts, this 24th day of December, 1920.

JULIUS B. MELTZ.