US 20070034379A1

(19) United States

(12) Patent Application Publication

(10) Pub. No.: US 2007/0034379 A1

(43) Pub. Date: Feb. 15, 2007

Fenton et al.

(54) PLUG INSTALLATION SYSTEM FOR DEEP WATER SUBSEA WELLS

(76) Inventors: **Stephen P. Fenton**, Houston, TX (US); **Jon E. Hed**, Houston, TX (US)

Correspondence Address:
BRACEWELL & GIULIANI LLP
P.O. BOX 61389
HOUSTON, TX 77208-1389 (US)

(21) Appl. No.: 11/517,715

(22) Filed: Sep. 8, 2006

Related U.S. Application Data

(63) Continuation of application No. 10/783,168, filed on Feb. 20, 2004, now Pat. No. 7,121,344, and which is a continuation-in-part of application No. 10/340,122, filed on Jan. 10, 2003, now Pat. No. 6,719,059.

(60) Provisional application No. 60/514,284, filed on Oct. 24, 2003.

Publication Classification

(51) Int. Cl.
E21B 29/12 (2006.01)

(52) U.S. Cl. 166/368

(57) **ABSTRACT**

A plug retrieval and installation tool is used with a subsea well having a production tree, a tubing hanger, a passage that extends vertically through the tubing hanger and the tree, and a plug located within a plug profile in the passage within the tubing hanger. The plug retrieval device has a housing and connector that is lowered on a lift line onto the upper end of the tree. An axially extendible stem in the housing is moved with hydraulic fluid controlled by an ROV into the production passage of the tubing hanger. An installation and retrieval member mounted to the stem engages the plug and pulls it upwardly in the passage while the stem is being moved upward, and pushes the plug downward to install the plug while the stem is being moved downward. The connector, drive mechanism and retrieval member are powered by an ROV.

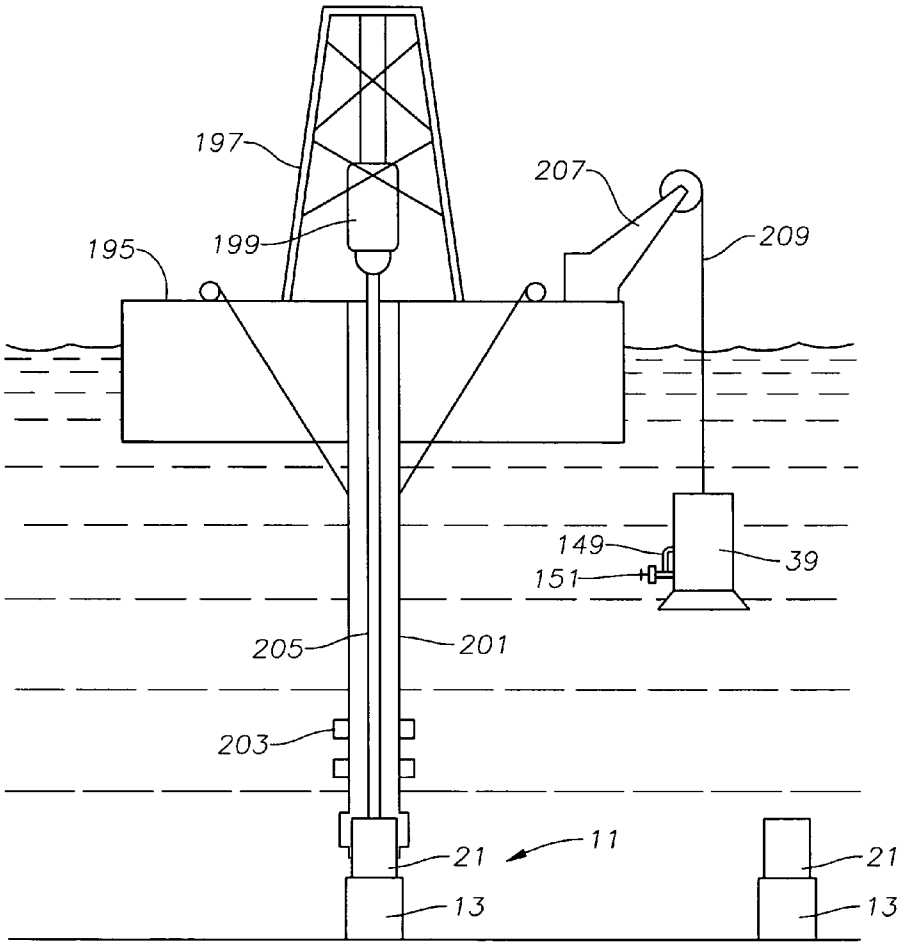

Fig. 1A

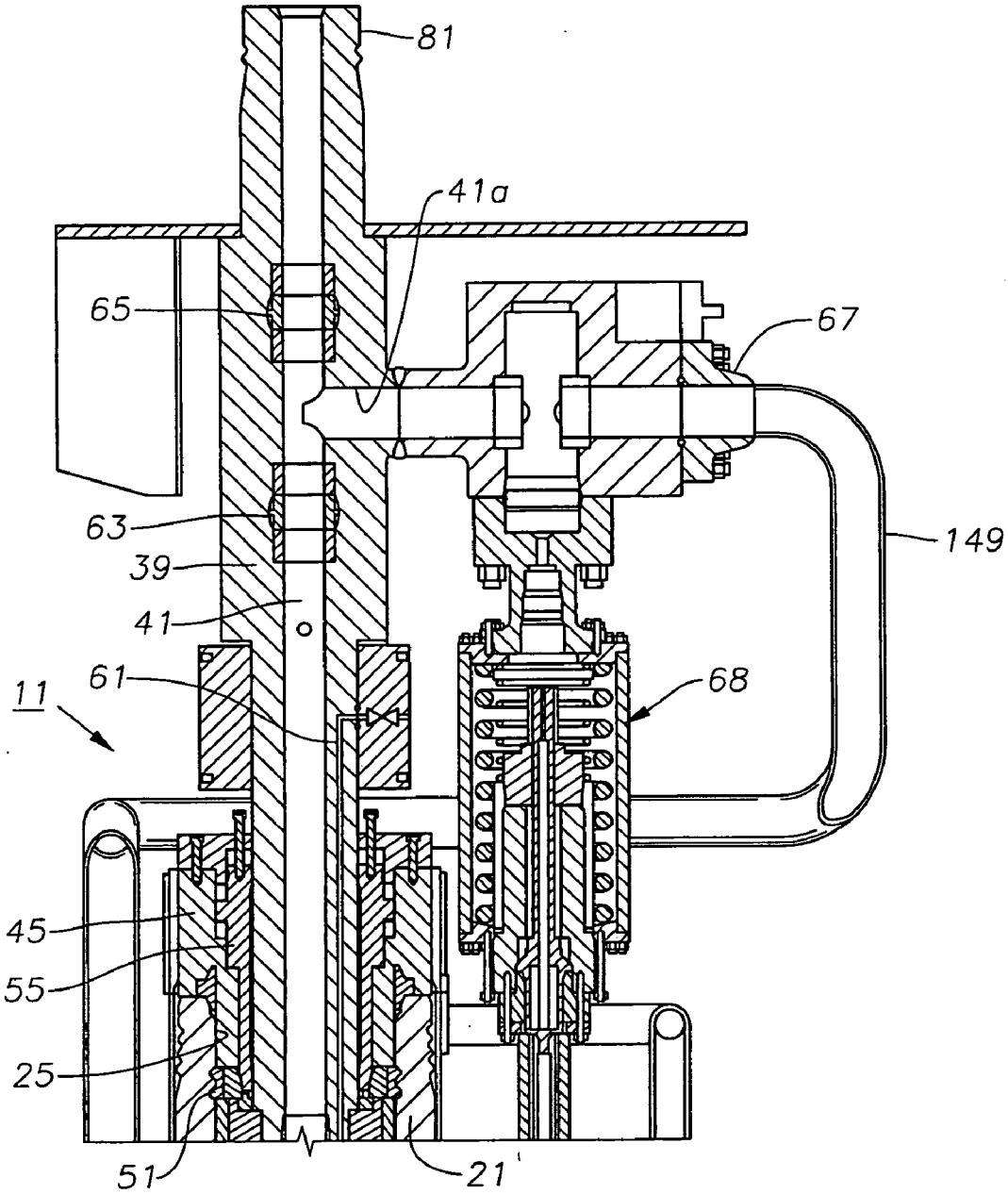

Fig. 1B

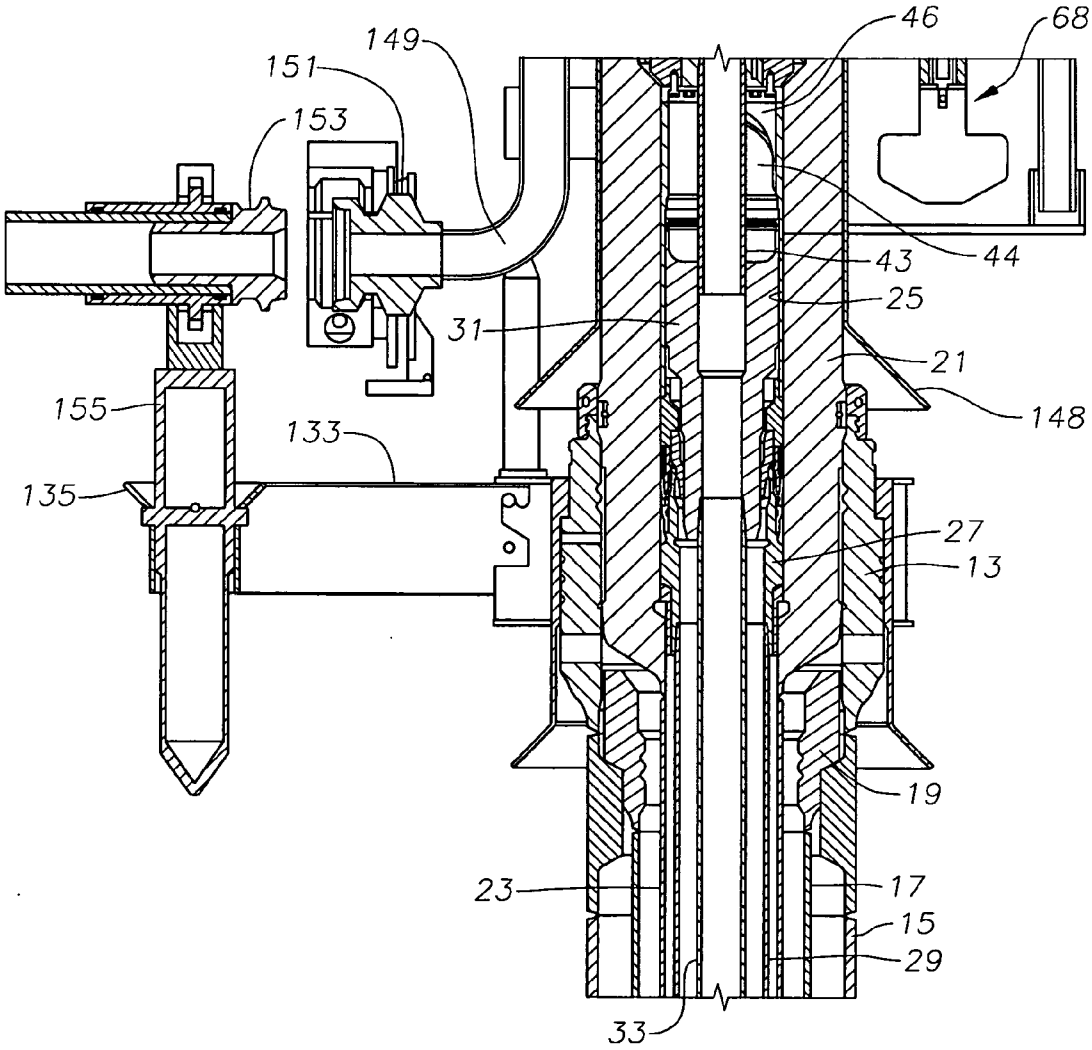
46
68
149
151
153
44
43
25
31
21
148
155
133
135
27
13
19
23
17
15
29
33

Fig. 2

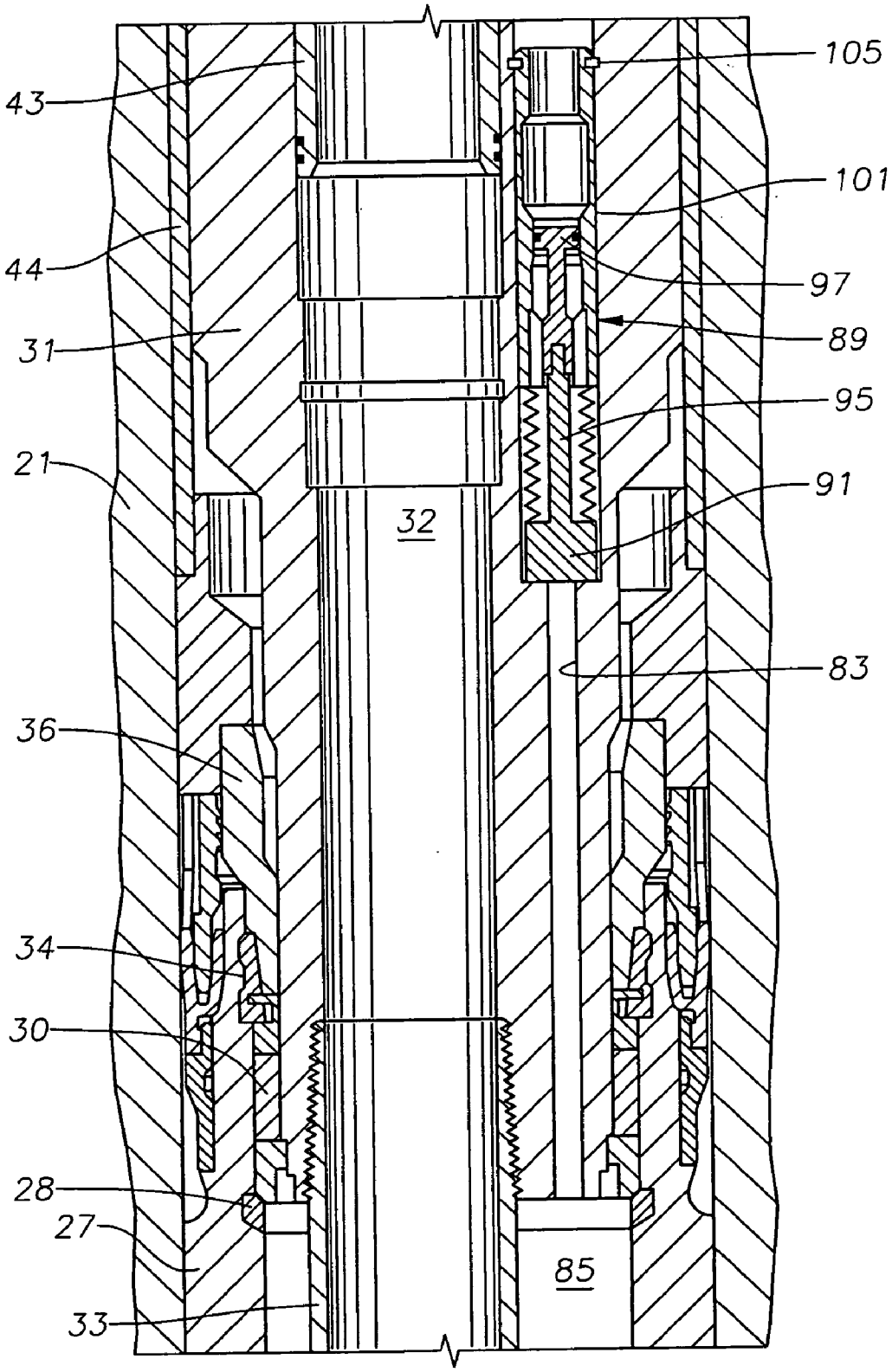

Fig. 3

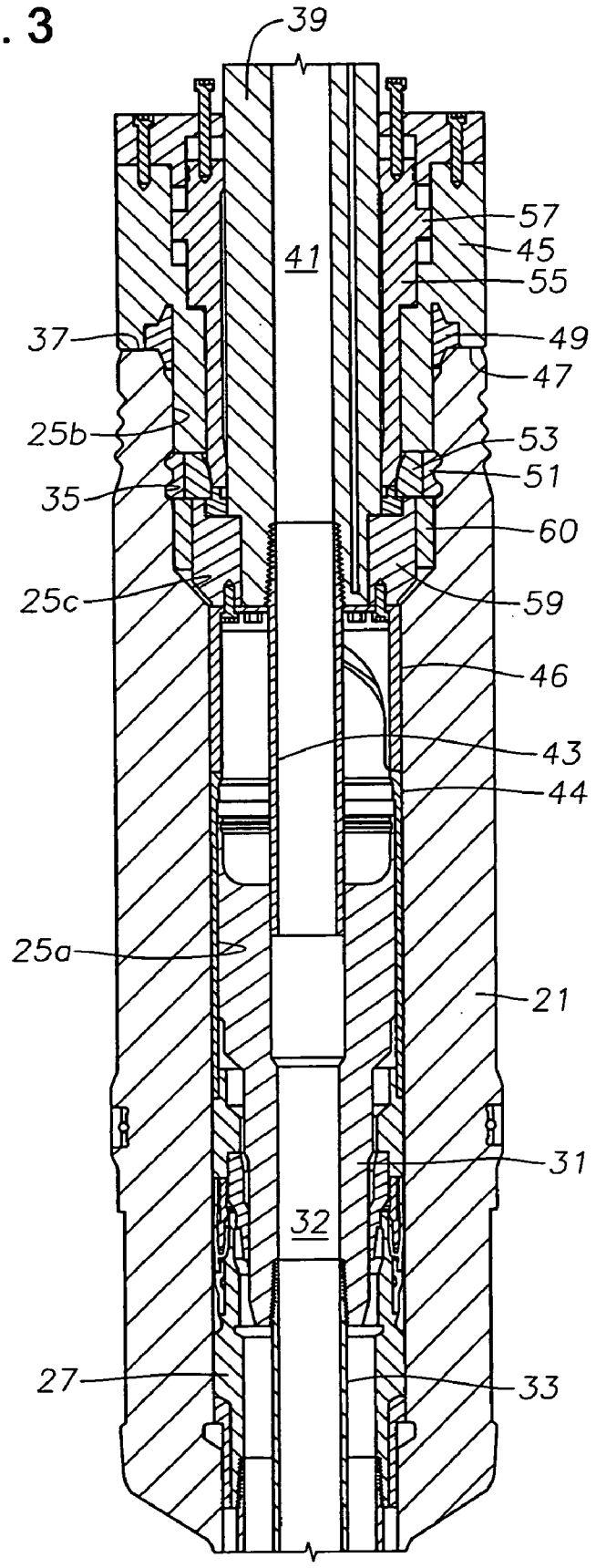
39
41
57
45
55
37
49
47
25b
53
51
35
60
25c
59
46
43
44
25a
21
31
32
27
33

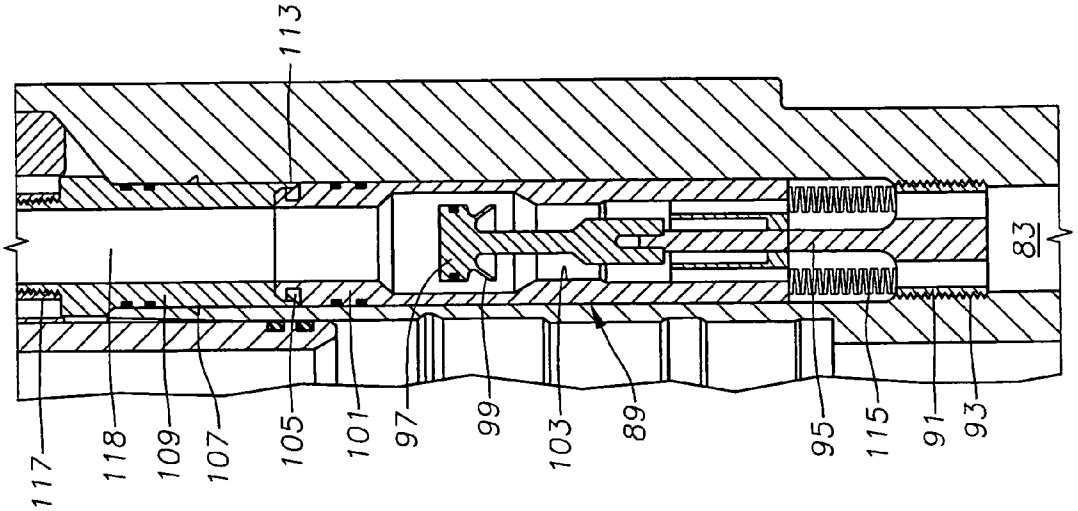
113
117
118
109
107
105
101
97
99
103
89
95
115
91
93
83

Fig. 5

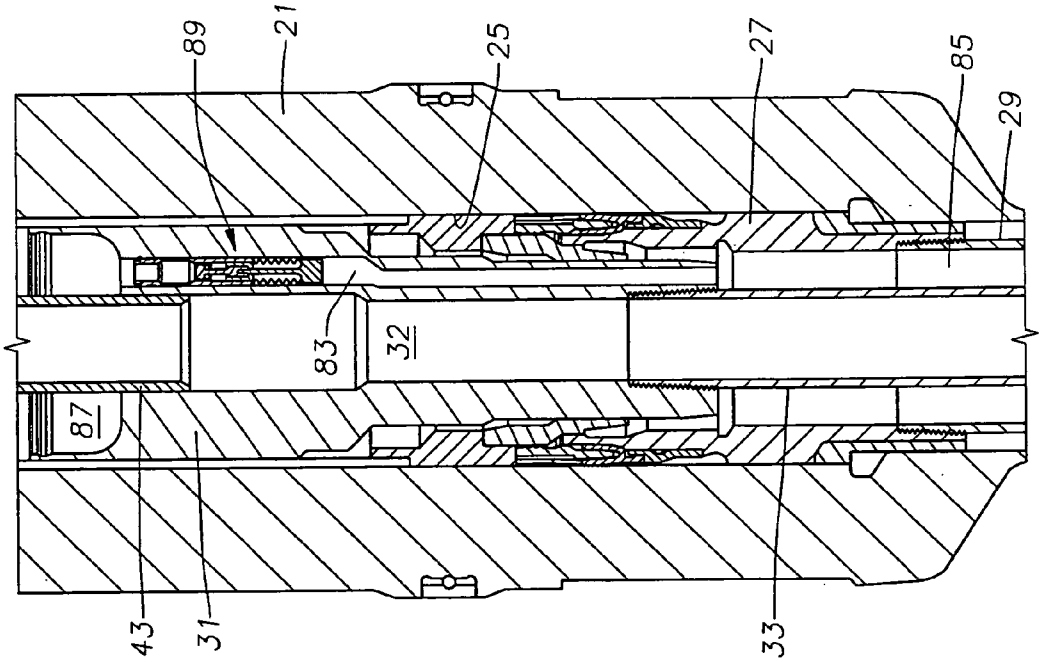
89
21
25
27
85
29
83
32
87
43
31
33

Fig. 4

Fig. 6

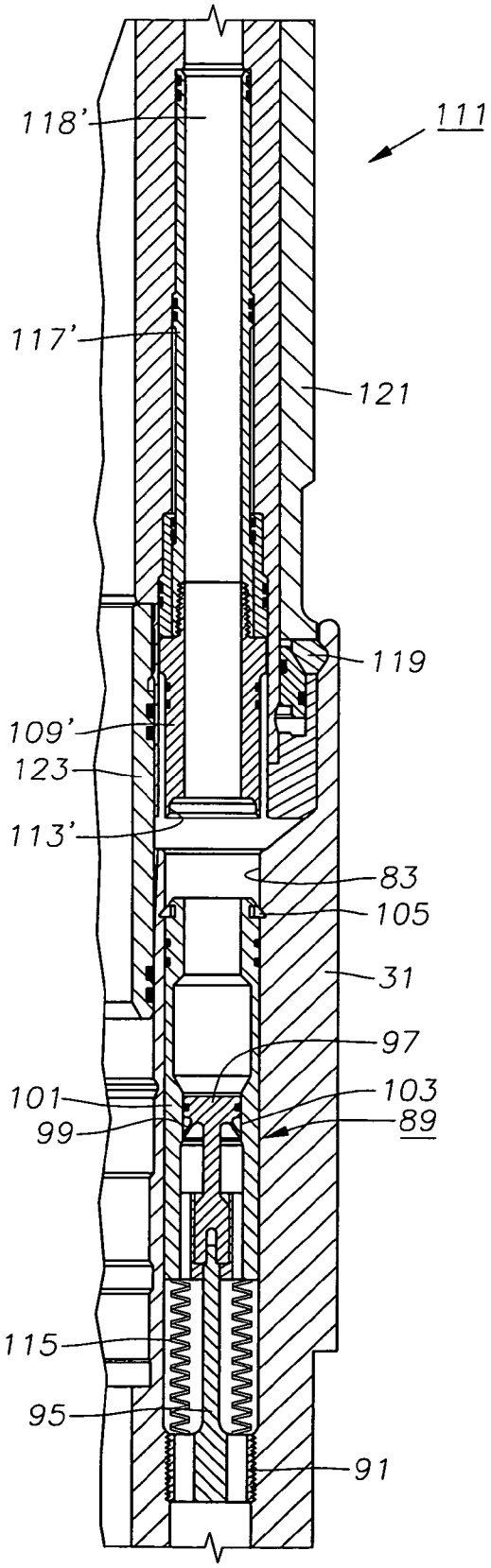
118'
111
117'
121
119
109'
123
113'
83
105
31
97
101
103
99
89
115
95
91

Fig. 7

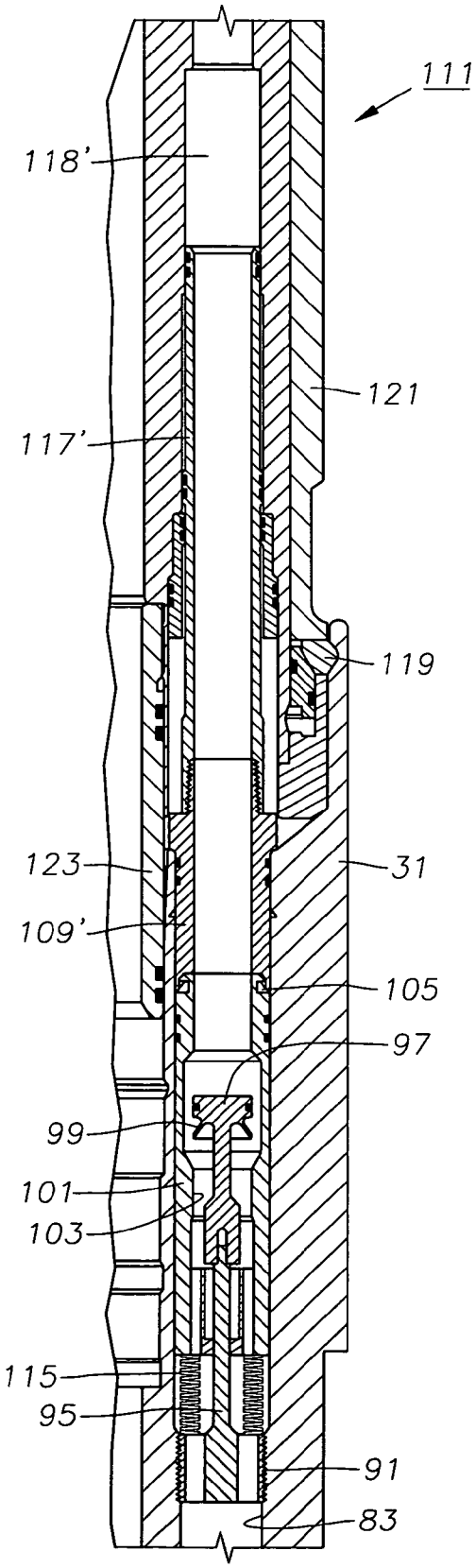
111
118'
121
117'
119
123
31
109'
105
97
99
101
103
115
95
91
83

Fig. 8

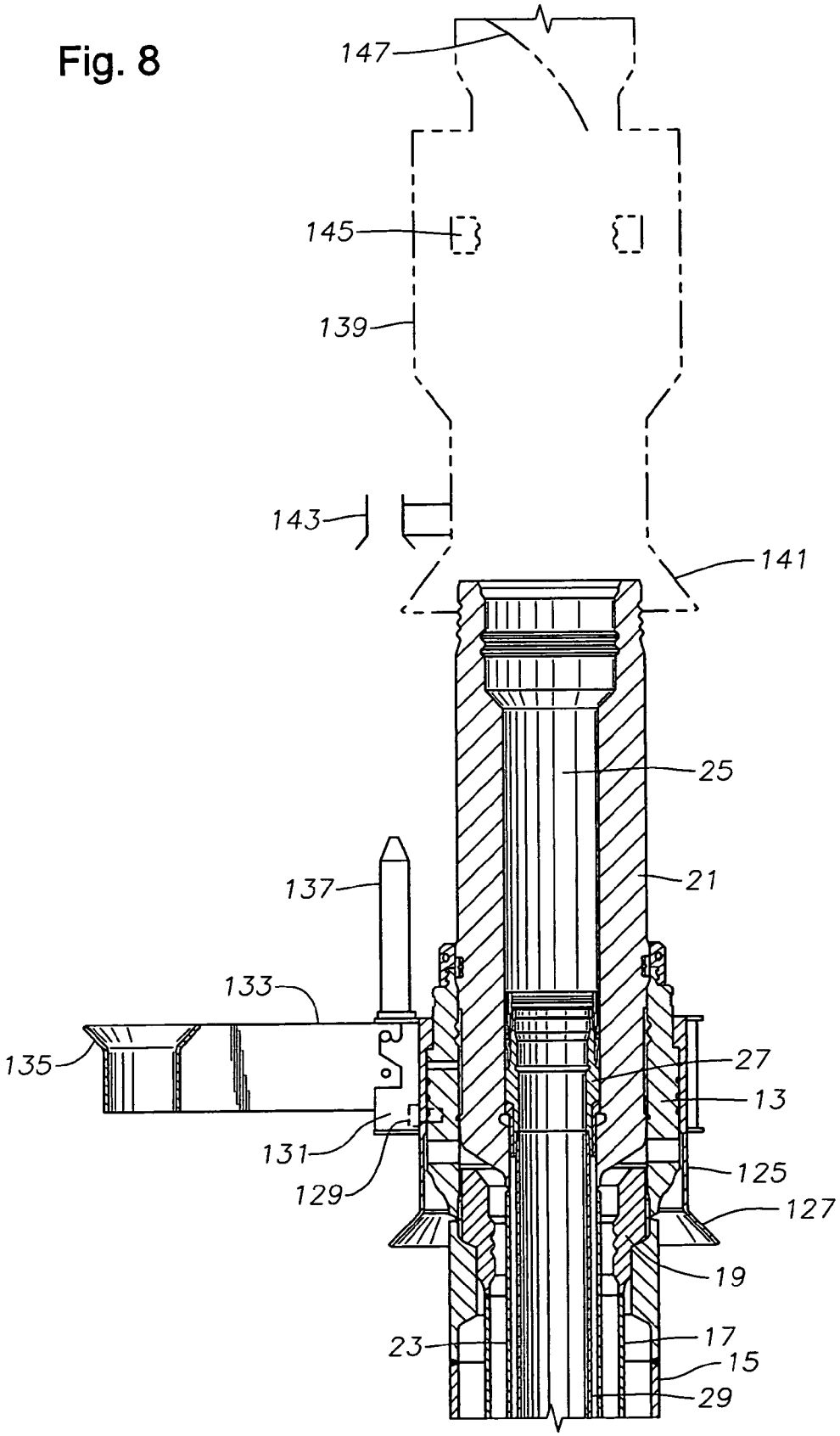
147
145
139
143
141
25
21
137
133
135
27
13
131
129
125
127
19
23
17
15
29

Fig. 9

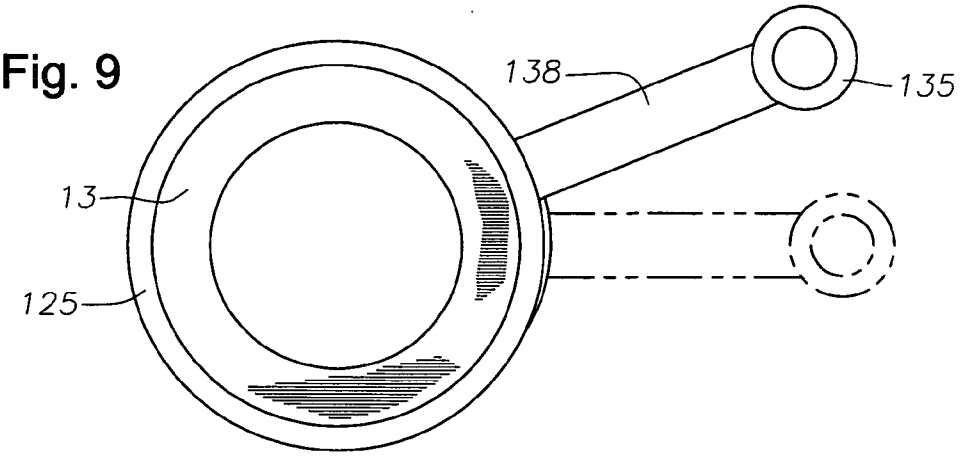

Fig. 10

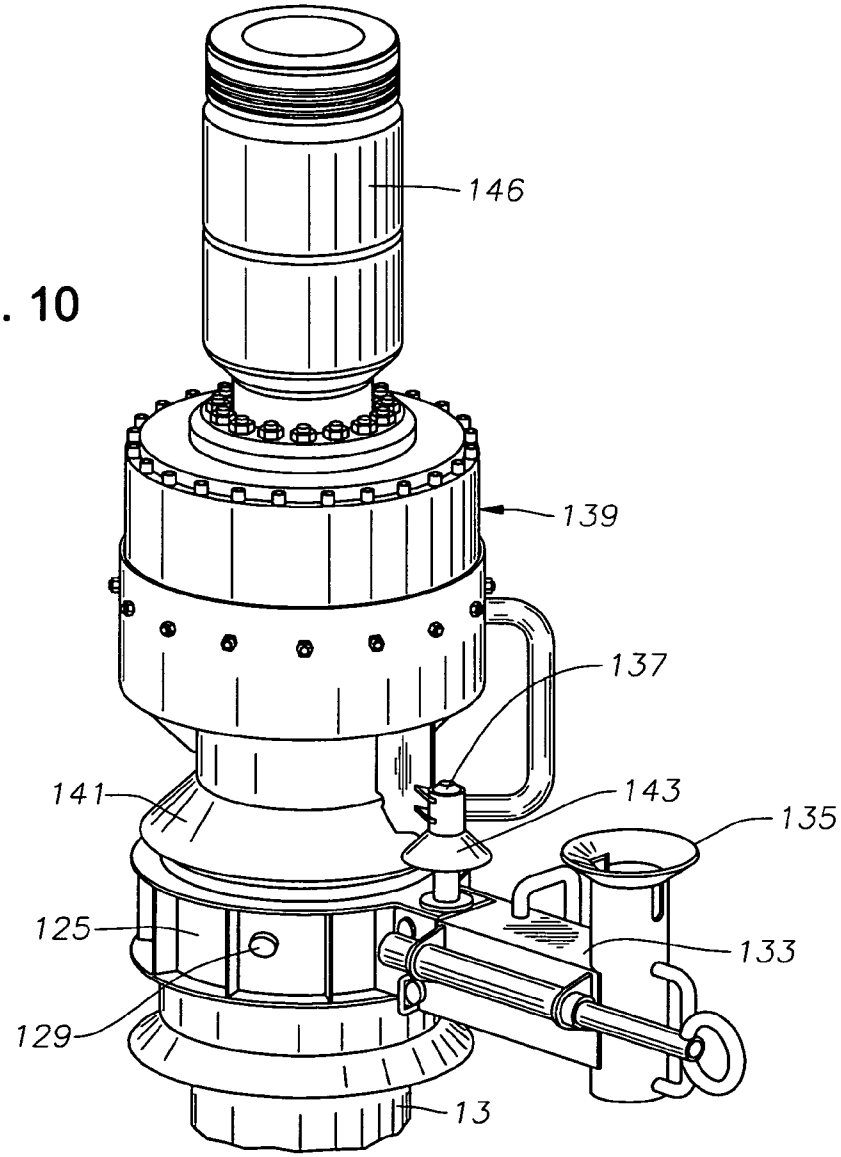

Fig. 11

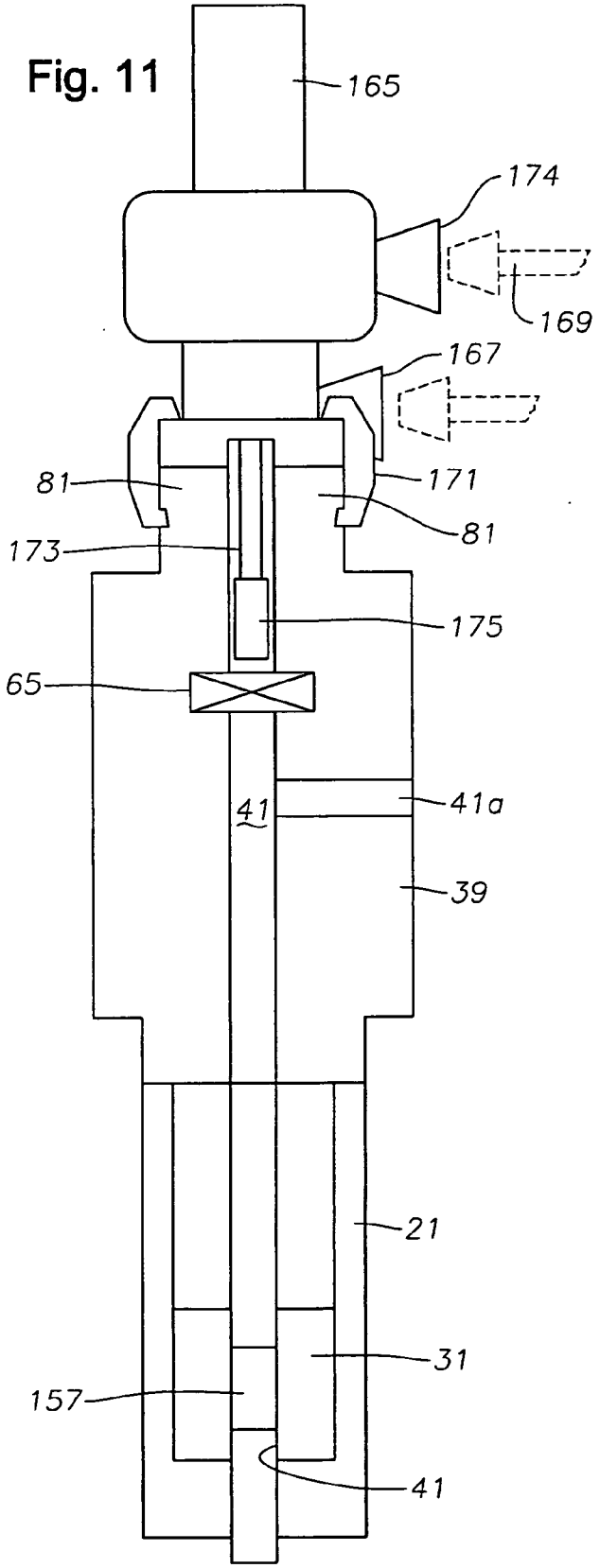
165
174
169
167
81
171
81
173
175
65
41
41a
39
21
31
157
41

Fig. 12

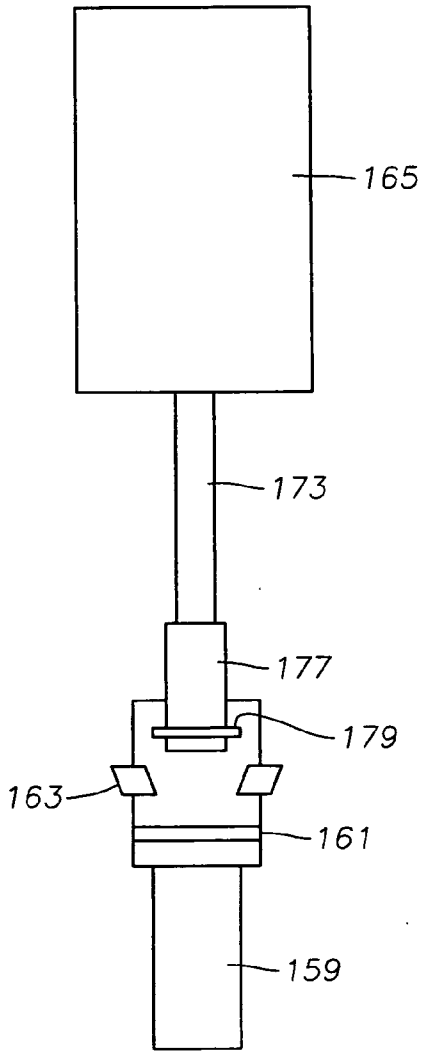
165
173
177
179
163
161
159

Fig. 13

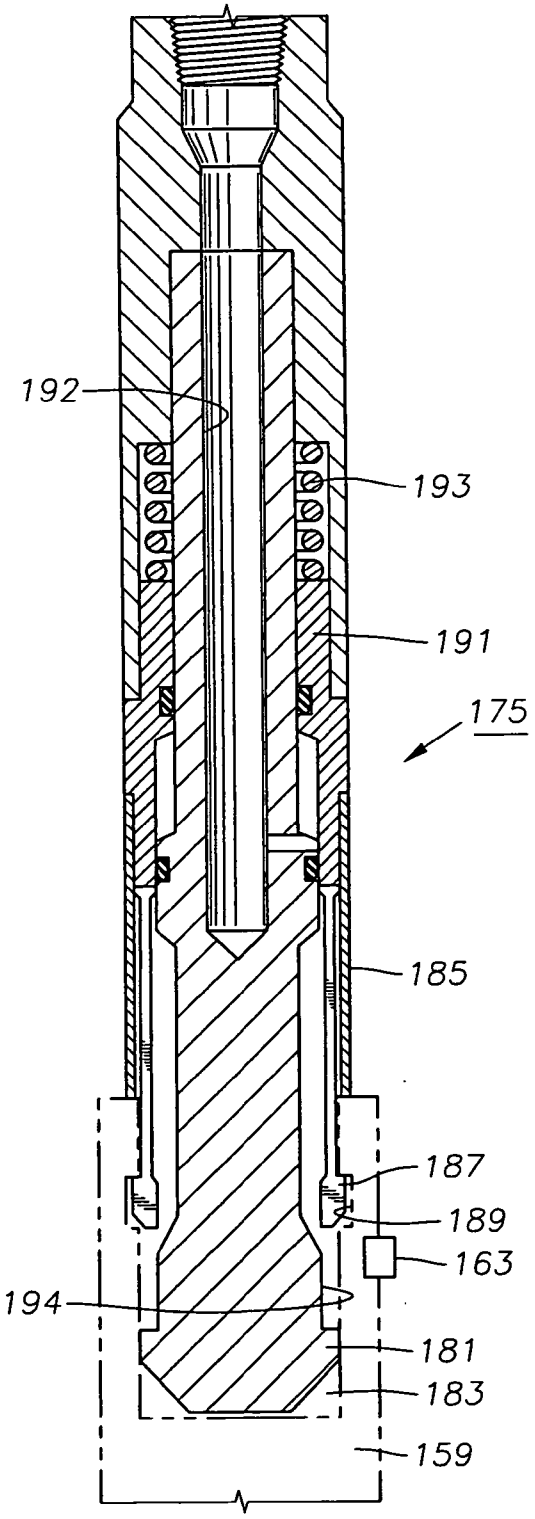
192
193
191
175
185
187
189
163
194
181
183
159

Fig. 14

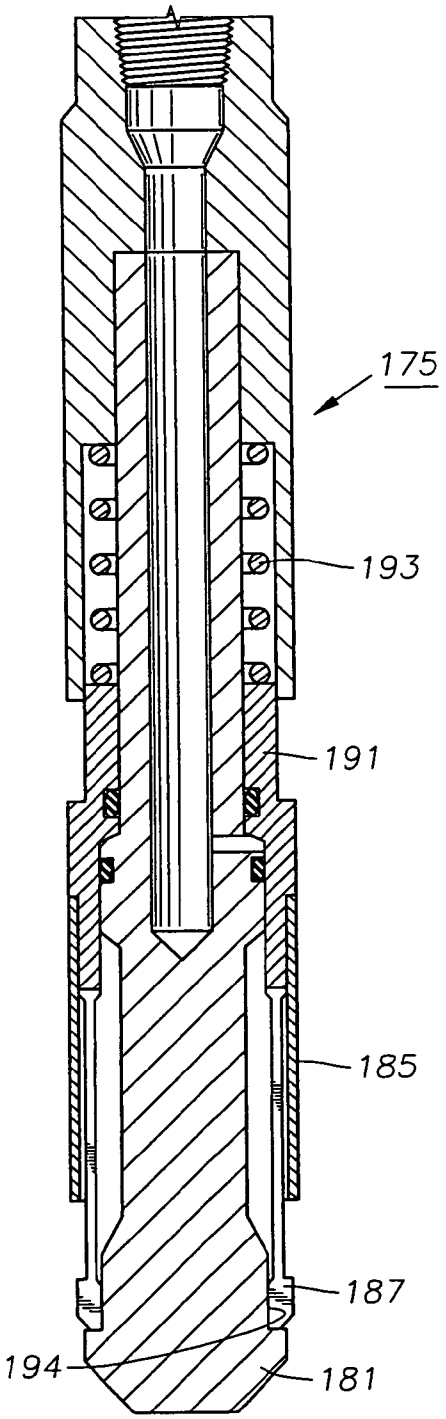
175
193
191
185
187
194
181

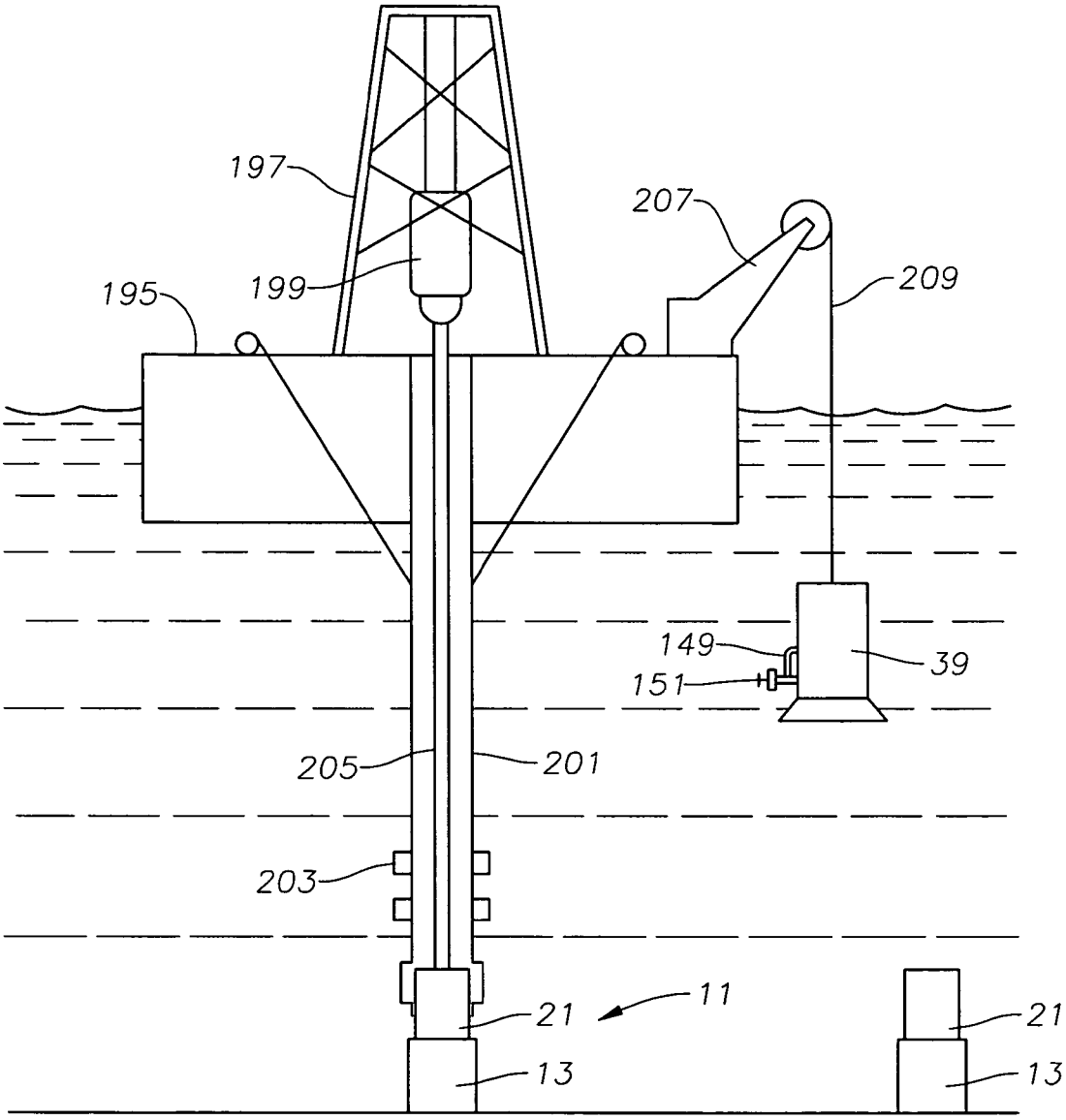

Fig. 15

PLUG INSTALLATION SYSTEM FOR DEEP WATER SUBSEA WELLS

RELATED APPLICATIONS

[0001] This nonprovisional application is a continuation of and claims the benefit and priority of co-pending, non-provisional patent application U.S. Ser. No. 10/783,168, filed on Feb. 20, 2004, which claimed the benefit of provisional patent application U.S. Ser. No. 60/514,284, filed on Oct. 24, 2003, and was also a continuation-in-part patent application that also claimed the benefit of then co-pending, non-provisional patent application U.S. Ser. No. 10/340,122, filed on Jan. 10, 2003, now U.S. Pat. No. 6,719,059, which is hereby incorporated by reference in its entirety.

BACKGROUND OF THE INVENTION

[0002] 1. Field of the Invention

[0003] This invention relates in general to subsea well installations and in particular to a system for installing and retrieving a plug from a tubing hanger.

[0004] 2. Background of the Invention

[0005] A typical subsea wellhead assembly has a high pressure wellhead housing supported in a lower pressure wellhead housing and secured to casing that extends into the well. One or more casing hangers land in the wellhead housing, the casing hanger being located at the upper end of a string of casing that extends into the well to a deeper depth. A string of tubing extends through the casing for production fluids. A Christmas or production tree mounts to the upper end of the wellhead housing for controlling the well fluid. The production tree is typically a large, heavy assembly, having a number of valves and controls mounted thereon.

[0006] One type of tree, sometimes called "conventional", has two bores through it, one of which is the production bore and the other is the tubing annulus access bore. In this type of wellhead assembly, the tubing hanger lands in the wellhead housing. The tubing hanger has two passages through it, one being the production passage and the other being an annulus passage that communicates with the tubing annulus surrounding the tubing. Access to the tubing annulus is necessary to circulate fluids down the production tubing and up through the tubing annulus, or vice versa, to either kill the well or circulate out heavy fluid during completion. After the tubing hanger is installed and before the drilling riser is removed for installation of the tree, plugs are temporarily placed in the passages of the tubing hanger. The tree has isolation tubes that stab into engagement with the passages in the tubing hanger when the tree lands on the wellhead housing. This type of tree is normally run on a completion riser that has two strings of conduit. In a dual string completion riser, one string extends from the production passage of the tree to the surface vessel, while the other extends from the tubing annulus passage in the tree to the surface vessel. It is time consuming, however to assemble and run a dual string completion riser. Also, drilling vessels may not have such a completion riser available, requiring one to be supplied on a rental basis.

[0007] In another type of tree, sometimes called "horizontal" tree, there is only a single bore in the tree, this being the production passage. The tree is landed before the tubing hanger is installed, then the tubing hanger is lowered and landed in the tree. The tubing hanger is lowered through the riser, which is typically a drilling riser. Access to the tubing annulus is available through choke and kill lines of the drilling riser. The tubing hanger does not have an annulus passage through it, but a bypass extends through the tree to a void space located above the tubing hanger. This void space communicates with the choke and kill lines when the blowout preventer is closed on the tubing hanger running string. In this system, the tree is run on drill pipe, thus prevents the drilling rig derrick of the floating platform from being employed on another well while the tree is being run.

[0008] In another and less common type of wellhead system, a concentric tubing hanger lands in the wellhead housing in the same manner as a conventional wellhead assembly. The tubing hanger has a production passage and an annulus passage. However, the production passage is concentric with the axis of the tubing hanger, rather than slightly offset as in conventional tubing hangers. The tree does not have a vertical tubing annulus passage through it, thus a completion riser is not required. Consequently the tree may be run on a monobore riser. A tubing annulus valve is located in the tubing hanger since a plug cannot be temporarily installed and retrieved from the tubing annulus passage with this type of tree.

[0009] In the prior art conventional and concentric tubing hanger types, the tubing hanger is installed before the tree is landed on the wellhead housing. The tubing is typically run on a small diameter riser through the drilling riser and BOP. Before the drilling riser is disconnected from the wellhead housing, a plug is installed in the tubing hanger as a safety barrier. The plug is normally lowered on a wireline through the small diameter riser. Subsequently, after the tree is installed, the plug is removed through the riser that was used to install the tree.

SUMMARY OF THE INVENTION

[0010] In this invention, a lift line deployable apparatus is provided for installing or retrieving a plug in a passage of a subsea wellhead assembly. The apparatus has a tubular housing that sealingly connects to an upper end of a subsea wellhead assembly. An axially movable stem is carried in the housing for movement between a retracted position and an extended position in the passage. A retrieval member is mounted to the stem for engaging the plug while in the extended position, and retrieving the plug as the stem is moved to the retracted position.

[0011] Preferably, the mechanism for connecting the housing to the upper end of the subsea wellhead assembly is powered by an ROV. Also, the drive mechanism for the stem is preferably controlled and powered by an ROV. Further, the retrieval member preferably is hydraulically driven by the ROV.

BRIEF DESCRIPTION OF THE DRAWINGS

[0012] FIGS. **1**A and **1**B comprise a vertical sectional view of a wellhead assembly constructed in accordance with this invention.

[0013] FIG. **2** is an enlarged sectional view of a portion of the wellhead assembly of FIGS. **1**A and **1**B, the sectional plane being different than in FIGS. **1**A and **1**B.

[0014] FIG. **3** is an enlarged sectional view of a portion of the wellhead assembly of FIGS. **1**A and **1**B.

[0015] FIG. **4** is another sectional view of a portion of the wellhead assembly of FIGS. **1**A and **1**B, but shown in the same sectional plane as in FIG. **2** to illustrate a tubing annulus valve in a closed position.

[0016] FIG. **5** is an enlarged sectional view of the tubing annulus valve of FIG. **4**, shown in an open position and engaged by an engaging member of the production tree.

[0017] FIG. **6** is an enlarged sectional view of the tubing annulus valve of FIG. **4**, shown in a closed position while a tubing hanger running tool is connected to the tubing hanger.

[0018] FIG. **7** is a sectional view of the tubing annulus valve as shown in FIG. **6**, but shown in an open position.

[0019] FIG. **8** is a sectional view of the wellhead housings of the wellhead assembly of FIGS. **1**A and **1**B after running casing and in the process of receiving a BOP adapter.

[0020] FIG. **9** is a schematic horizontal sectional view of the wellhead housings of FIG. **8**, the dotted lines showing a flowline connector arm being rotated.

[0021] FIG. **10** is a perspective view of the wellhead assembly of FIGS. **1**A and **1**B, after the BOP adapter of FIG. **8** has landed.

[0022] FIG. **11** is a schematic vertical sectional view of the wellhead assembly of FIGS. **1**A and **1**B, showing an ROV deployed plug tool mounted on the tree.

[0023] FIG. **12** is a schematic side view of the plug tool of FIG. **11**, with a plug setting attachment.

[0024] FIG. **13** is a schematic sectional view of a plug retrieving attachment for the plug tool of FIG. **11**, shown in a disengaged position with a plug, illustrated by the dotted lines.

[0025] FIG. **14** is a more detailed sectional view of the plug retrieving attachment of FIG. **13**, shown in an engaged position.

[0026] FIG. **15** is a schematic view of a field being developed in accordance with this invention.

DETAILED DESCRIPTION OF THE PREFERRED EMBODIMENT

Overall Structure of Subsea Wellhead Assembly

[0027] Referring to FIG. **1**B, a lower portion of a wellhead assembly **11** includes an outer or low pressure wellhead housing **13** that locates on the sea floor and is secured to a string of large diameter conductor pipe **15** that extends into the well. In this embodiment, a first string of casing **17** is suspended on a lower end of outer wellhead housing **13** by a hanger **19**. However, casing **17** and hanger **19** are not always suspended from the outer wellhead housing **13** and can be eliminated in many cases.

[0028] An inner or high pressure wellhead housing **21** lands in and is supported within the bore of outer wellhead housing **13**. Inner wellhead housing **21** is located at the upper end of a string of casing **23** that extends through casing **17** to a greater depth. Inner wellhead housing **21** has a bore **25** with at least one casing hanger **27** located therein. Casing hanger **27** is sealed within bore **25** and secured to the upper end of a string of casing **29** that extends through casing **23** to a greater depth. Casing hanger **27** has a load shoulder **28** located within its bore or bowl.

[0029] In this embodiment, a tubing hanger **31** is landed, locked, and sealed within the bore of casing hanger **27**. Referring to FIG. **2**, tubing hanger **31** has a lower end that lands on load shoulder **28**. A seal **30** seals between the exterior of tubing hanger **31** and the bore of casing hanger **27** above load shoulder **28**. A split lock ring **34** moves from a retracted position radially outward to lock tubing hanger **31** to an internal profile in casing hanger **27**. A sleeve **36**, when moved axially downward, energizes seal **30** as well as pushes lock ring **34** to the locked position. Tubing hanger **31** is secured to the upper end of a string of production tubing **33**. Tubing hanger **31** has a production passage **32** that is coaxial with tubing **33**.

[0030] Referring to FIG. **3**, inner wellhead housing bore **25** has a lower portion **25***a* that has a smaller diameter than upper portion **25***b*. This results in a conical generally upward facing transition portion or shoulder **25***c* located between portions **25***a* and **25***b*. Wellhead housing bore upper portion **25***b* has a grooved profile **35** formed therein above tubing hanger **31**. Profile **35** is located a short distance below rim **37**, which is the upper end of inner wellhead housing **21**.

[0031] As shown in FIG. **1**A, a Christmas or production tree **39** has a lower portion that inserts into wellhead housing **21**. Production tree **39** has a production passage **41** extending through it that has an outlet port **41***a* extending laterally outward. Production tree **39** has an isolation tube **43** that depends downward from its lower end and stabs sealingly into production passage **32** of tubing hanger **31**. The lower end of production tree **39** extends into bore **25** of inner wellhead housing **21** to bore transition section **25***c* (FIG. **3**).

[0032] Referring again to FIG. **3**, an orientation sleeve **44** is a part of and extends upward from tubing hanger **31**. Orientation sleeve **44** is nonrotatably mounted to the exterior of the body of tubing hanger **31**. Orientation sleeve **44** has a helical contour formed on its upper edge. A mating orientation sleeve **46** with a helical contour on its lower edge is secured to the lower end of production tree **39**. When tree **39** is lowered into wellhead housing **21**, orientation sleeve **46** engages the helical contour of orientation sleeve **46** to rotate production tree **39** and orient it in the desired direction relative to tubing hanger **31**.

Tree and Wellhead Housing Internal Connector

[0033] Tree **39** includes a connector assembly for securing it to wellhead housing **21**. The connector assembly includes a connector body **45** that has a downward facing shoulder **47** that lands on rim **37**. Connector body **45** is rigidly attached to tree **39**. A seal **49** seals between rim **37** and shoulder **47**. Connector body **45** also extends downward into wellhead housing **21**. A locking element **51** is located at the lower end of connector body **45** for engaging profile **35**. Locking element **51** could be of a variety of types. In this embodiment; locking element **51** comprises an outer split ring that has a mating profile to groove **35**. A plurality of dogs **53** located on the inner diameter of locking element **51** push locking element **51** radially outward when moved by a cam sleeve **55**. Cam sleeve **55** moves axially and is hydraulically driven by hydraulic fluid supplied to a piston **57**.

[0034] The connector assembly has an extended or retainer portion **59** that extends downward from connector

body **45** in this embodiment. Extended portion **59** is located above and secured to orientation sleeve **46**. A collar **60** is threaded to the outer diameter of extended portion **59** for retaining locking element **51** and dogs **53** with connector body **45**. Alternately dogs **53** could be used to engage profile **35** and locking element **51** omitted. In that case, windows could be provided for the dogs in connector body **45**, and extended portion **59** and collar **60** would be integrally formed with connector body **45**.

[**0035**] Referring to FIG. **1**A, a control fluid passage **61** extends through tree **39** to an exterior side portion for supplying control fluid. Although not shown, there are a number of these passages, and they lead to connector tubes on the lower end of tree **39**. The connector tubes stab into mating passages on the upper end of tubing hanger **31**. These passages lead to hydraulic control lines that are not shown but extend below tubing hanger **31** on the outside of production tubing **33**. These control lines lead to downhole equipment in the string of tubing **33**, such as a downhole safety valve and downhole pressure and temperature monitoring devices.

[**0036**] At least one valve is mounted to production tree **39** for controlling fluid flow. In the preferred embodiment, the valves includes a master valve **63** and a swab valve **65** located in production passage **41**. A safety shutoff valve **67** is mounted to port **41***a*. The hydraulic actuator **68** for safety shutoff valve **67** is shown. Valves **63** and **65** may be either hydraulically actuated or mechanically actuated (typically by ROV).

[**0037**] Referring again to FIG. **1**A, tree **39** has a mandrel **81** on its upper end that protrudes upward. Mandrel **81** is typically sized for receiving a connector for connection to a small diameter, lightweight riser, such as for certain workover purposes. Mandrel **81** also enables other methods of intervention.

Tubing Annulus Access

[**0038**] FIG. **4** illustrates a tubing annulus passage **83**, which is not shown in FIGS. **1**B or **3** because tubing annulus passage **83** is located in a different vertical sectional plane than that shown in FIGS. **1**B and **3**. Tubing annulus passage **83** extends vertically through tubing hanger **31** from an upper end portion to a lower end, where it communicates with a tubing annulus **85** surrounding tubing **33**. The upper and lower ends of tubing annulus passage **83** may be slightly radially offset from each other, as shown in FIG. **4**. An annular void space **87** surrounds isolation tube **43** between the upper end of tubing hanger **31** and the lower end of tree **39**.

[**0039**] A tubing annulus valve **89** is mounted in tubing annulus passage **83** to block tubing annulus passage **83** from flow in either direction when closed. Referring to FIG. **5**, tubing annulus valve **89** has a stem base **91** that is secured by threads **93** to tubing annulus passage **83**. A stem **95** extends upward from stem base **91** along the axis of tubing annulus passage **83**. An enlarged valve head **97** forms the upper end of stem **95**. Valve head **97** has a secondary resilient seal as well as a primary lip seal **99** that is made of metal in this embodiment.

[**0040**] A shuttle sleeve **101** is reciprocally carried in tubing annulus passage **83**. While in the upper closed position shown in FIGS. **4** and **6**, the upper end of sleeve **101** is a short distance below an upper end portion of tubing hanger **31**. While in the lower open position, shown in FIGS. **5** and **7**, sleeve **101** is in a lower position relative to valve head **97**. Sleeve **101** has a reduced diameter port or seat **103** formed in its interior. Seat **103** is sealingly engaged by lip seal **99** as well as the resilient seal of valve head **97** while sleeve **101** is in the lower position.

[**0041**] An outward biased split ring **105** is mounted to the outer diameter of sleeve **101** near its upper end. Split ring **105** has a downward tapered upper surface and a lower surface that is located in a plane perpendicular to the axis of tubing annulus passage **83**. A mating groove **107** is engaged by split ring **105** while sleeve **101** is in the upper, closed position. Split ring **105** snaps into groove **107**, operating as a detent or retainer to prevent downward movement of sleeve **101**.

[**0042**] FIG. **5** shows an engaging tool or member **109** extending into the upper end of tubing annulus passage **83** into engagement with the upper end of sleeve **101**. Engaging member **109** is a downward extending component of tree **39** (FIG. **1**A) and is used for moving sleeve **101** from the upper to the lower position. A second identical engaging member **109'**, shown in FIGS. **6** and **7**, is mounted to a running tool **111** used to run tubing hanger **31**. Engaging member **109** has a lip **113** on its lower end that mates with the upward facing taper on split ring **105**. Lip **113** slides over and causes split ring **105** to contract, enabling engaging member **109** to push sleeve **101** downward to the open position. A spring **115**, which may be a plurality of Belleville washers, is located between stem base **91** and the lower end of sleeve **101**. Spring **115** urges sleeve **101** to the upper closed position. Any pressure in passage **83** would assist spring **115** in moving sleeve **101** to the closed position.

[**0043**] Engaging member **109** is secured to the lower end of an actuator **117**, which is mounted in tree **39**. Actuator **117** is a hollow, tubular member with open ends reciprocally carried in a tubing annulus passage **118** in tree **39** (FIG. **3**). Actuator **117** has a piston portion on its exterior side wall that is selectively supplied with hydraulic fluid for moving actuator **117** between upper and lower positions. Tubing annulus passage **118** extends through tree **39** to an exterior side portion of tree **39** for connection to a tubing annulus line that leads typically to a subsea manifold or an umbilical that serves the tree. Tubing annulus passage in tree **118** does not extend axially to the upper end of tree **39**.

[**0044**] When actuator **117** is moved to the lower position, engaging member **109** engages and pushes sleeve **101** from the closed position to the open position. FIGS. **6** and **7** show a similar actuator **117'** that forms a part of running tool **111** and works in the same manner as actuator **117**. Like actuator **117**, actuator **117'** has a piston portion that is carried in a hydraulic fluid chamber for causing the upward and downward movement in response to hydraulic pressure. Passage **118'** leads to an exterior upper portion of running tool **111** for delivering and receiving tubing annulus fluid.

[**0045**] Running tool **111** has conventional features for running tubing hanger **31**, including setting a seal between tubing hanger **31** and bore **25** of wellhead housing **21** (FIG. **4**). Running tool **111** has a lock member **119** that is radially and outwardly expansible into a mating groove formed in an interior upward extending sleeve portion of tubing hanger **31**. Lock member **119** secures running tool **111** to tubing

hanger **31** while tubing **33** is being lowered into the well. Lock member **119** is energized and released by a lock member actuator **121**, which is also hydraulically driven. Running tool **111** has a sleeve **123** that slides sealingly into the bore **32** of tubing hanger **31**. Sleeve **123** isolates the upper end of tubing annulus passage **83** from production passage **32** (FIG. **4**) in tubing hanger **31**.

Orientation

[**0046**] Referring to FIG. **8**, a ring **125** is mounted to the exterior of outer wellhead housing **13**, also referred to as a conductor housing. Ring **125** has a depending funnel **127** and is selectively rotatable on outer wellhead housing **13** for orienting tubing hanger **31** and tree **39** (FIG. **3**) in a desired position relative to other subsea wells and equipment. A lock pin or screw **129** will selectively lock ring **125** in the desired position. An arm bracket **131** is mounted to ring **125** for rotation therewith. Arm bracket **131** cantilever supports a horizontally extending arm **133**. Arm **133** has an upward facing socket on its outer end **131**. Also, a guide pin **137** protrudes upward from arm **133**.

[**0047**] Ring **125** is normally installed on outer wellhead housing **13** at the surface before outer wellhead housing **13** is lowered into the sea. Arm **133** will be attached to arm bracket **131** below the rig floor but at the surface. After outer wellhead housing **13** is installed at the sea floor, if necessary, an ROV may be employed later in the subsea construction phase to rotate ring **125** to a different orientation.

[**0048**] A BOP (blowout preventer) adapter **139** is being shown lowered over inner or high pressure housing **21**. BOP adapter **139** is used to orient tubing hanger **31** (FIG. **3**) relative to arm **133**. BOP adapter **139** is preferably lowered on a lift line after the well has been drilled and casing hanger **27** installed. The drilling riser, along with the BOP, will have been removed from the upper end of inner wellhead housing **21** prior to lowering BOP adapter **139** in place. BOP adapter **139** has a guide socket **143** that is mounted to its exterior at a point for aligning with pin **137**. A funnel **141** on the lower end of BOP adapter **139** assists in lowering BOP adapter **139** over inner wellhead housing **21**. Socket **143** will orient BOP adapter **139** to a position depending upon the orientation of arm **133** and pin **137**. An ROV (not shown) will be used to assist guide socket **143** in aligning with guide pin **137**.

[**0049**] BOP adapter **139** has a plurality of dogs **145** that are hydraulically energized to engage an external profile on inner wellhead housing **21**. BOP adapter **139** also has seals (not shown) that seal its bore to bore **25** of wellhead housing **21**. A helical orienting slot **147** is located within the bore of BOP adapter **139**. Slot **147** is positioned to be engaged by a mating pin or lug on running tool **111** (FIG. **6**) for tubing hanger **31**. This engagement causes running tool **111** to orient tubing hanger **31** in a desired orientation relative to the orientation of arm **133**.

[**0050**] FIG. **10** is a perspective view showing BOP adapter **139** in position on inner wellhead housing **21**, which is not shown in FIG. **10** because it is located within the bore of BOP adapter **139**. BOP adapter **139** has an upper end with a mandrel **146**. The drilling riser and BOP will connect to the external profile on mandrel **146** after BOP adapter **139** has been connected to inner wellhead housing **21**.

[**0051**] Once BOP adapter **139** has oriented tubing hanger **31** (FIG. **1**B), the well will typically be perforated and tested. Tubing hanger **31** must be oriented relative to the arm **133** because orientation sleeve **44** (FIG. **3**) of tubing hanger **31** provides orientation to tree **39**, as shown in FIGS. **1**A and **1**B. Tree **39** has a tree funnel **148** that slides over inner wellhead housing **21** as it is landing.

[**0052**] The safety shutoff valve **67** of tree **39** is connected to a flow line loop **149** that leads around tree **39** to a flow line connector **151** on the opposite side as shown in FIG. **1**B. Flow line connector **151** will connect to a flow line **153** that typically leads to a manifold or subsea processing equipment. In this embodiment, flow line **153** is mounted to a vertical guide pin or mandrel **155** that stabs into guide funnel **135** to orient to tree **39**. Other types of connections to flow line connector **151** could also be employed. Consequently, tree is oriented so that its flowline connector **151** will register with flowline **153**.

Plug Retrieval and Installation

[**0053**] After tree **39** is installed, a plug **159** (FIG. **12**) must be removed from a plug profile **157** located within tubing hanger **31**, as shown in FIG. **11**. Plug **159** maintains pressure that is within tubing **33** after BOP adapter **139** (FIG. **10**) is removed and prior to installing tree **39** (FIG. **1**A). Plug **159** is conventional and has one or more seals **161** that seal within production passage **41** of tubing hanger **31**. Plug **159** has a plurality of locking elements **163** that will move radially outward between a retracted and an extended position. Locking elements **163** engage a mating groove in profile **157**.

[**0054**] Preferably, rather than utilizing wireline inside a workover riser, as is typical, an ROV deployed plug tool **165** is utilized. Plug tool **165** does not have a riser extending to the surface, rather it is lowered on a lift line. Plug tool **165** has a hydraulic or mechanical stab **167** for engagement by ROV **169**. The housing of plug tool **165** lands on top of tree mandrel **81**. A seal retained in plug tool **165** engages a pocket in mandrel **81** of tree **39**. When supplied with hydraulic pressure or mechanical movement from ROV **169**, a connector **171** will engage mandrel **81** of tree **39**. Similarly, connector **171** can be retracted by hydraulic pressure or mechanical movement supplied from ROV **169**. Once connected, any pressure within mandrel **81** is communicated to the interior of the housing of plug tool **165**. Prior to connection, valve **65** would normally be closed and plug **159** would also provide a pressure barrier.

[**0055**] Plug tool **165** has an axially movable stem **173** that is operated by hydraulic pressure supplied to a hydraulic stab **174**. Stem **173** moves from a retracted position, wholly within the housing of plug tool **165** to an extended position in the proximity of plug profile **157**. A retrieving tool **175** is located on the lower end of stem **173** for retrieving plug **159**. Similarly, a setting tool **177** may be attached to stem **173** for setting plug **159** in the event of a workover that requires removal of tree **39**. Setting tool **177** may be of a variety of types and for illustration of the principle, is shown connected by shear pin **179** to plug **159**. Once locking elements **163** have engaged profile **157**, an upward pull on stem **173** causes shear pin **179** to shear, leaving plug **159** in place.

[**0056**] Retrieving tool **175**, shown in FIGS. **13** and **14**, may also be of a variety of conventional types. In this embodiment, retrieving tool **175** has a body **181** that inserts partially into a receptacle **183** in plug **159**. A locator sleeve

185 on the exterior of body 181 will land on the rim of receptacle 183. A collet 187 is located within locator sleeve 185 and protrudes below a selected distance. When locator sleeve 185 has landed on the rim of plug 159, collet 187 will be aligned with a groove 189 within the plug 159.

[0057] Collet 187 and sleeve 185 are joined to a piston 191. Piston 191 is supplied with hydraulic fluid from ROV 169 (FIG. 10) via one of the stabs 174. A spring 193 is compressed while retrieving tool 175 is in the released position, shown in FIG. 13. Spring 193 urges piston 191 to a lower position. When hydraulic pressure is relieved at passage 192, spring 193 will cause body 181 to move upward to the position shown in FIG. 14. In this position, a wall portion 194 of body 181 will locate directly radially inward of collet 187, preventing collet 187 from disengaging from profile 189. Once retrieving tool 175 is attached to plug 159, ROV 169 will actuate one of the hydraulic stabs or mechanical interfaces 174 to cause stem 173 (FIG. 11) to move upward. Collet 187 causes dogs 163 to be radially retractable during this upward movement as plug 159 is disengaged. Once plug 159 is above tree valve 65, tree valve 65 may be closed, enabling the entire assembly of plug tool 165 to be retrieved to the surface with a lift line.

Field Development

[0058] FIG. 15 schematically illustrates a preferred method for developing a field having a plurality of closely spaced wellhead assemblies 11. This method is particularly useful in water that is sufficiently deep such that a floating platform 195 must be utilized. Platform 195 will be maintained in position over the wells by various conventional means, such as thrusters or moorings. Platform 195 has a derrick 197 with a drawworks 199 for drilling and performing certain operations on the wells. Platform 195 also has a drilling riser 201 that is employed for drilling and casing the wells. Drilling riser 201 is shown connected to high pressure housing 21 of one wellhead assembly 11. Drilling riser 201 has a blowout preventer 203 within it. In the particular operation shown, a string of drill pipe 205 is shown extending through riser 201 into the well.

[0059] Platform 195 also preferably has a crane or lift line winch 207 for deploying a lift line 209. Lift line 207 is located near one side of platform 195 while derrick 197 is normally located in the center. Optionally, lift line winch 207 could be located on another vessel that typically would not have a derrick 197. In FIG. 14, a tree 39 is shown being lowered on lift line 209.

Drilling and Completion Operation

[0060] In operation, referring to FIG. 8, outer housing 13 along with ring 125 and arm 133 are lowered into the sea. Outer housing 13 is located at the upper end of conductor 15, which is jetted into the earth to form the first portion of the well. As conductor 15 nears the seabed, the entire assembly and arm 133 will be set in the desired position. This position will be selected based on which way the field is to be developed in regard to other wells, manifolds, subsea processing equipment and the like. Once conductor 15 has been jetted into place and later in the subsea construction program, the operator may release lock pins 129 and rotate ring 125 to position arm 133 in a different orientation. This subsequent repositioning of arm 133 is performed as necessary or as field development needs change to optimize connection points for the well flowline jumpers.

[0061] The operator then drills the well to a deeper depth and installs casing 117, if such casing is being utilized. Casing 117 will be cemented in the well. The operator then drills to a deeper depth and lowers casing 23 into the well. Casing 23 and high pressure wellhead housing 21 are run on drill pipe and cemented in place. No orientation is needed for inner wellhead housing 21. The operator may then perform the same steps for two or three adjacent wells by repositioning the drilling platform 195 (FIG. 15).

[0062] The operator connects riser 201 (FIG. 15) to inner wellhead housing 21 and drills through riser 201 to the total depth. The operator then installs casing 29, which is supported by casing hanger 27. In some cases, an additional string of casing would be installed with the well being drilled to an even greater depth.

[0063] The operator is then in position to install tubing hanger 31 (FIG. 1B). First, the operator disconnects drilling riser 201 (FIG. 15) and BOP 203 and suspends it off to one side of wellhead assembly 11. The operator lowers BOP adapter 139 on lift line 209 over inner wellhead housing 21, as illustrated in FIG. 8. With the aid of an ROV, socket 143 is positioned to align with pin 137. BOP adapter 139 is locked and sealed to inner wellhead housing 21. BOP adapter 139 may have been previously installed on an adjacent well left temporarily abandoned.

[0064] The operator then attaches drilling riser 201, including BOP 203, (FIG. 15) to mandrel 146 (FIG. 10) of BOP adapter 139. The operator lowers tubing 33 and tubing hanger 31 through drilling riser 201 on running tool 111 (FIG. 6), which is attached to a tubing hanger running string, which is a small diameter riser. Once running tool 111 is connected to tubing hanger 31, actuator 117' is preferably stroked to move engaging member 109' downward, thereby causing shuttle sleeve 101 to move downward. This opens tubing annulus passage 83 for upward and downward flow. Running tool 11 has a retractable pin (not shown) that engages BOP adapter guide slot 147 (FIG. 8), causing it to rotate tubing hanger 31 to the desired position as it lands within casing hanger 27.

[0065] After tubing hanger 31 has been set, the operator may test the annulus valve 89 by stroking actuator 117' upward, disengaging engaging member 109 from sleeve 101 as shown in FIG. 6. Spring 115 pushes sleeve 101 to the upper closed position. In this position, valve head seal 99 will be engaging sleeve seat 103, blocking flow in either the upward or downward direction. While in the upper position, detent split ring 105 engages groove 107, preventing any downward movement.

[0066] The operator then applies fluid pressure to passage 118' within running tool 111. This may be done by closing the blowout preventer in drilling riser 201 on the small diameter riser above running tool 111. The upper end of passage 118' communicates with an annular space surrounding the small diameter riser below the blowout preventer in drilling riser 201. This annular space is also in communication with one of the choke and kill lines of drilling riser 201. The operator pumps fluid down the choke and kill line, which flows down passage 118' and acts against sleeve 101. Split ring 105 prevents shuttle sleeve 101 from moving downward, allowing the operator to determine whether or not seals 99 on valve head 97 are leaking.

[0067] The well may then be perforated and completed in a conventional manner. In one technique, this is done prior

to installing tree **39** by lowering a perforating gun (not shown) through the small diameter riser in the drilling riser **201** (FIG. **15**) and through tubing **33**. The smaller diameter riser may optionally include a subsea test tree that extends through the drilling riser.

[**0068**] If desired, the operator may circulate out heavy fluid contained in the well before perforating. This may be done by opening tubing annulus valve **89** by stroking actuator **117'** and engaging member **109'** downward. Engaging member **109'** releases split ring **105** from groove **107** and pushes sleeve **101** downward to the open position of FIG. **7**. A port such as a sliding sleeve (not shown) at the lower end of tubing **33** is conventionally opened and the blowout preventer in drilling riser **201** is closed around the tubing hanger running string. The operator may circulate down the running string and tubing **33**, with the flow returning up tubing annulus **85** into drilling riser **201** and up a choke and kill line. Reverse circulation could also be performed.

[**0069**] After perforating and testing, the operator will set plug **159** (FIG. **12**) in profile **157** (FIG. **11**) in tubing hanger production passage **32**. Typically, plug **159** is set by lowering it on wireline through the small diameter riser. Tubing annulus valve **89** is closed to the position of FIG. **6** by stroking actuator **117'** upward, causing spring **115** to move sleeve **101** upward. The operator then retrieves running tool **111** on the running string through the blowout preventer and drilling riser **201**. The downhole safety valve (not shown) in tubing **33** is above the perforations and is preferably closed to provide a first pressure barrier; plug **159** in tubing hanger production passage **32** providing a second pressure barrier. Tubing annulus **85** normally would have no pressure, and tubing annulus valve **89** provides a temporary barrier in the event pressure did exist.

[**0070**] The operator then retrieves running tool **111** (FIG. **6**) on the small diameter riser. The operator releases drilling riser **201** and BOP **203** from BOP adapter **139** (FIG. **8**) and retrieves BOP adapter **139** on lift line **209** (FIG. **15**) or deploys BOP adapter **139** on an adjacent well. The operator may then skid platform **195** sequentially over the other wells for performing the same functions with BOP adapter **139** and drilling riser **201** for a different well. Once tubing **29** has been run and perforated, there is no more need for drilling riser **201** or derrick **197** (FIG. **15**). Even though platform **195** may have skidded out of alignment with the particular well, an ROV can guide lift line **209** down to engage and retrieve or move BOP adapter **139**.

[**0071**] The operator is now in position for running tree **39** on lift line **209** (FIG. **15**). Tree **39** orients to the desired position by the engagement of the orienting members **44** and **46** (FIG. **3**). This positions tree connector **151** in alignment with flowline connector **153**, if such had already been installed, or at least in alignment with guide funnel **135**. Flowline connector **153** could be installed after installation of tree **39**, or much earlier, even before the running of high pressure wellhead housing **21**. As tree **39** lands in wellhead housing **21**, its lower end will move into bore **25** of wellhead housing **21**, and isolation tube **43** will stab into production passage **32** of tubing hanger **31**. While being lowered, orientation member **44** engages orientation sleeve **46** to properly orient tree **39** relative to tubing hanger **31**. Once landed, the operator supplies hydraulic fluid pressure to cam sleeve **55**, causing dogs **53** to push locking element **51** (FIG. **2**) to the outer engaged position with profile **35**. Flowline connector **151** (FIG. **1**B) of tree **39** aligns with flowline connector **153**, and the tubing annulus passage (not shown) in tree **39** is connected to a manifold or a related facility.

[**0072**] Referring to FIGS. **11-13**, in a preferred technique, with lift line **209** (FIG. **15**) and the assistance of ROV **169**, the operator lowers and connects plug tool **165** to tree mandrel **81**. The operator opens valve **65** and removes plug **159** in tubing hanger **31** with retrieval tool **175**. Tree valve **65** is closed once plug **159** is above it. Plug tool **165** and plug **159** may then be retrieved and a tree cap installed, typically using ROV **169**. Tree **39** should be ready for production.

[**0073**] Referring to FIG. **5**, during production, tubing annulus valve **89** may remain closed, but is typically held open for monitoring the pressure in tubing annulus **85**. If tubing annulus valve **89** is closed, it can be opened at any time by stroking actuator **117** (FIG. **5**) of tree **39** downward. Any pressure within tubing annulus **85** is communicated through tubing annulus passage **118** in tree **39** and to a monitoring and bleedoff facility.

[**0074**] For a workover operation that does not involve pulling tubing **33**, a light weight riser with blowout preventer may be secured to tree mandrel **81**. An umbilical line would typically connect the tubing annulus passage on tree **39** to the surface vessel. Wireline tools may be lowered through the riser, tree passage **41** and tubing **33**. The well may be killed by stroking actuator **117** (FIG. **5**) downward to open tubing annulus valve **89**. Circulation can be made by pumping down the riser, through tubing **33**, and from a lower port in tubing **33** to tubing annulus **85**. The fluid returns through tubing annulus passage **83** and passage **118** in tree **39** to the umbilical line.

[**0075**] For workover operations that require pulling tubing **33**, tree **39** must be removed from wellhead housing **21**. A lightweight riser would not be required if tubing hanger plug **159** (FIG. **12**) is reset into profile **157** of tubing hanger **31** with plug tool **165** (FIG. **11**). The operator installs plug tool **165** using lift line **209** (FIG. **15**) and ROV **169**. Plug **159** is attached to stem **173** and retrieval tool **177** by shear pin **179** and lowered into profile **157**. Once locking elements **163** latch into profile **157**, the operator pulls upward, releasing retrieval tool **177** from plug **159** by shearing pin **179**. The downhole safety valve in tubing **33** typically would be closed during this operation. Tree **39** is retrieved on lift line **209** with the assistance of ROV **169**. Then drilling riser **201** (FIG. **15**) is lowered into engagement with inner wellhead housing **21**. The operator retrieves tubing **33** and performs the workover in a conventional manner.

[**0076**] The invention has significant advantages. The plug tool allows a plug to be retrieved from the tubing hanger without the need for a riser extending to the surface. Since a riser is not needed, the tree can be efficiently run on a lift line. The plug tool is easily installable on a lift line. Its functions of connecting, moving the stem, and engaging the plug are accomplished by power from an ROV, avoid the need for an umbilical to the surface for the plug tool. The plug tool can also set a plug in the tubing hanger in the event a plug is needed.

[**0077**] While the invention has been shown in only one of its forms, it should be apparent to those skilled in the art that it is not so limited but is susceptible to various changes without departing from the scope of the invention.

1-18. (canceled)

19. An apparatus for retrieving a plug in a passage of a subsea wellhead assembly, comprising:

a housing adapted to be sealingly connected to an upper end of a subsea wellhead assembly;

an axially movable stem carried in the housing for movement between a retracted position and an extended position into the passage; and

a retrieving member mounted to the stem to engage the plug while in the extended position, and to retrieve the plug as the stem is moved to the retracted position.

20. The apparatus according to claim 19, further comprising a drive mechanism for moving the stem between the engaged and retracted positions, the drive mechanism adapted to be powered by an ROV.

21. A method for retrieving a plug in a passage of a subsea wellhead assembly, comprising:

(a) mounting an axially movable stem having a retrieval member thereon within a housing;

(b) lowering the housing on a lift line and sealingly connecting the housing to an upper end of a subsea wellhead assembly while the stem is in a retracted position;

(c) axially moving the stem downward into the passage and causing the retrieval member to engage the plug; and

(d) moving the stem upward along with the plug.

22. The method according to claim 21, wherein step (b) further comprises providing a subsea tree that forms an upper portion of the subsea wellhead assembly, and wherein the housing sealingly connects to the subsea wellhead assembly by sealingly connecting to an upper end of the subsea tree.

23. The method according to claim 21, wherein step (b) further comprises providing a subsea tree connected to a lower end of the housing, and wherein the housing and the subsea tree are lowered on the lift line, the housing being sealingly connected to the subsea wellhead assembly when the subsea tree sealingly connects to the subsea wellhead assembly.

24. A method for retrieving a plug from a passage of a subsea wellhead assembly, comprising the steps of:

providing a retrieval device which comprises an extendable stem and a retrieval tool which is attached to the stem and removably connectable to the plug;

securing the retrieval device to the subsea wellhead assembly;

retrieving the plug from the passage using the retrieval device; and

removing the retrieval device from the subsea wellhead assembly with the plug connected to the retrieval device.

25. The method according to claim 24, further comprising the step of sealing the retrieval device to the subsea wellhead assembly prior to the plug retrieving step; wherein the retrieval device forms a pressure-containing barrier between the passage and a surrounding environment.

26. The method according to claim 24, wherein the retrieval device comprises an ROV operated subsea tool.

27. The method according to claim 24, wherein the retrieval device is deployable from a surface facility on at least one of a cable and a drill string.

28. The method according to claim 24, further comprising the step of retrieving the retrieval device to a surface facility with the plug connected to the retrieval device.

29. The method according to claim 28, wherein the step of retrieving the retrieval device is performed with at least one of a cable and a drill string which is deployed from the surface facility.

30. The method according to claim 24, wherein the plug retrieving step comprises the steps of extending the stem into engagement with the plug, connecting the retrieval tool to the plug and retracting the plug from the passage.

31. A method for installing a plug in a passage of a subsea wellhead assembly, comprising:

providing an installation device which comprises an extendable stem and an installation tool which is attached to the stem and removably connectable to the plug;

connecting the plug to the installation tool;

securing the installation device to the subsea wellhead assembly; and

installing the plug in the passage using the installation device.

32. The method according to claim 31, further comprising the step of sealing the installation device to the subsea wellhead assembly prior to the plug installing step; wherein the installation device forms a pressure-containing barrier between the passage and a surrounding environment.

33. The method according to claim 31, wherein the installation device comprises an ROV operated subsea tool.

34. The method according to claim 31, further comprising the step of lowering the installation device from a surface facility on at least one of a cable and a drill string.

35. The method according to claim 31, further comprising the step of retrieving the installation device to a surface facility after the plug installing step.

36. The method according to claim 35, wherein the step of retrieving the installation device is performed with at least one of a cable and a drill string which is deployed from the surface facility.

37. The method according to claim 35, wherein the step of retrieving the installation device is performed with at least one of a cable and a drill string which is deployed from a facility located above the tree.

38. The method according to claim 31, wherein the plug installing step comprises the steps of extending the stem to position the plug in the passage, securing the plug to the passage and disconnecting the plug from the installation tool.

39. A method for installing a subsea wellhead assembly over a well bore, the subsea wellhead assembly comprising a wellhead which is installed at an upper end of the well bore; a tubing hanger which comprises at least one tubing hanger production passage, and a subsea tree which comprises at least one tree bore, the method comprising the steps of:

(a) installing the tubing hanger in the wellhead;

(b) installing a plug in the production passage;

(c) installing the subsea tree over the wellhead with the tree bore in alignment with the tubing hanger bore;

(d) providing a retrieval device which comprises an extendable stem and a retrieval tool which is attached to the stem and removably connectable to the plug;

(e) with the retrieval device secured to the subsea wellhead assembly above the subsea tree, retrieving the plug from the production passage through the tree bore using the retrieval device.

40. The method according to claim 39, further comprising the step of sealing the retrieval device to the subsea wellhead assembly prior to the plug retrieving step; wherein the retrieval device forms a pressure-containing barrier between the tubing hanger bore and a surrounding environment.

41. The method according to claim 39, wherein the retrieval device comprises an ROV operated subsea tool.

42. The method according to claim 39, further comprising the step of lowering the subsea tree from a surface facility to the wellhead on at least one of a cable and a drill string;

43. The method according to claim 39, further comprising the step of securing the retrieval device to the subsea tree after the subsea tree is installed over the wellhead.

44. The method according to claim 39, further comprising the step of securing the retrieval device to the subsea tree prior to landing the subsea tree on the wellhead.

45. The method according to claim 44, further comprising the step of lowering the retrieval device and the subsea tree from a surface facility to the wellhead on at least one of a cable and a drill string.

46. The method according to claim 39, further comprising the step of removing the retrieval device from the subsea wellhead assembly with the plug connected to the retrieval device.

47. The method according to claim 46, further comprising the step of retrieving the retrieval device to a surface facility with the plug connected to the retrieval device.

48. The method according to claim 47, wherein the step of retrieving the retrieval device is performed with at least one of a cable and a drill string which is deployed from the surface facility.

49. The method according to claim 39, wherein the wellhead is installed within an outer housing and the method further comprises the steps of: mounting a guide assembly to the outer housing; and orienting the tubing hanger relative to the guide assembly.

50. The method according to claim 49, wherein the step of orienting the tubing hanger relative to the guide assembly comprises the steps of: landing a tubing hanger orientation tool on the wellhead; orienting the tubing hanger running tool relative to the guide assembly; and orienting the tubing hanger relative to the tubing hanger running tool.

51. The method according to claim 50, further comprising the step of orienting the subsea tree relative to the guide assembly.

52. The method according to claim 39, wherein the wellhead comprises a wellhead housing having a tubing spool positioned thereon, and in step (a) the tubing hanger is installed within one of the wellhead housing and the tubing spool.

53. A method for retrieving a plug from a passage of a subsea wellhead assembly, comprising:

providing an ROV operated subsea tool (ROT) which comprises an extendable stem and a retrieval tool which is attached to the stem and removably connectable to the plug;

securing and sealing the ROT to the subsea completion system;

and retrieving the plug from the bore using the ROT.

54. An apparatus for installing a subsea wellhead assembly comprising an outer housing which is positioned on the sea floor, an wellhead housing which is landed in the outer housing, at least one casing hanger which is connected to a corresponding casing string, a tubing hanger which is connected to a production tubing string and which includes at least one tubing hanger production passage, and a subsea tree which is installed over the wellhead housing and which includes at least one production bore that is aligned with the tubing hanger production passage, the apparatus comprising:

an ROV operated subsea tool (ROT) which comprises an elongated body; a bore which extends longitudinally through the body; an elongated stem which is positioned in the bore; a plug tool which is connected to an end of the stem; means for removably connecting the ROT to the subsea tree; and means for moving the stem through the bore to thereby move the plug tool through the production passage and into engagement with a plug in the production passage;

and at least one of a cable and a drill string which is connected to the ROT and by which the ROT and the subsea tree are lowered to the wellhead housing.

55. A method for installing a subsea wellhead assembly comprising an outer housing which is positioned on the sea floor, a wellhead housing which is landed in the outer housing, at least one casing hanger which is connected to a corresponding casing string, a tubing hanger which is connected to a production tubing string and which includes at least one tubing hanger production passage, and a subsea tree which is installed over the wellhead housing and which includes at least one production bore, the method comprising the steps of:

(a) installing the outer housing on the sea floor;

(b) landing the wellhead housing in the outer housing;

(c) securing a blowout preventer (BOP) to the wellhead housing;

(d) landing the casing hanger in the wellhead housing through the BOP;

(e) connecting the tubing hanger to a tubing hanger running tool (THRT);

(f) landing the tubing hanger in the wellhead housing or the casing hanger through the BOP;

(g) installing a wireline plug in the production passage through the THRT;

(h) retrieving the THRT;

(i) retrieving the BOP;

(j) securing an ROV operated subsea tool (ROT) to the subsea tree;

(k) landing the subsea tree on the wellhead housing; and

(l) retrieving the wireline plug from the production passage using the ROT.

56. The method according to claim 55, wherein:

in step (b) the wellhead housing further comprises a tubing spool positioned thereon, and

in step (f) the tubing hanger is landed through the BOP within one of the wellhead housing, the tubing spool, and the casing hanger.

57. A method for installing a plug in a bore of a subsea wellhead assembly, the method comprising the steps of:

providing an ROV operated subsea tool (ROT), which comprises an extendable stem and an installation tool which is attached to the stem and removably connectable to the plug;

connecting the plug to the installation tool;

securing and sealing the ROT to the subsea completion system; and

installing the plug in the bore using the ROT.

58. A method for installing a subsea wellhead assembly, the subsea wellhead assembly comprising a wellhead which is installed at an upper end of the well bore; a tubing hanger which comprises at least one tubing hanger production passage, and a subsea tree which comprises at least one tree bore, the method comprising the steps of:

(a) installing the tubing hanger in the wellhead;

(b) installing a plug in the production passage;

(c) installing the subsea tree over the wellhead with the tree bore in alignment with the production passage;

(d) providing an ROV operated subsea tool (ROT) which comprises an extendable stem and a retrieval tool which is attached to the stem and removably connectable to the plug;

(e) with the ROT secured to the subsea completion system above the subsea tree, retrieving the plug from the production passage through the tree bore with the ROT.

59. The method according to claim 58, wherein the wellhead comprises a wellhead housing having a tubing spool positioned thereon, and in step (a) the tubing hanger is installed within one of the wellhead housing and the tubing spool.

* * * * *