Nov. 30, 1937. O. L. VINE 2,100,888

COLLAPSIBLE PAPER FUNNEL CONSTRUCTION

Filed Jan. 27, 1936 2 Sheets-Sheet 1

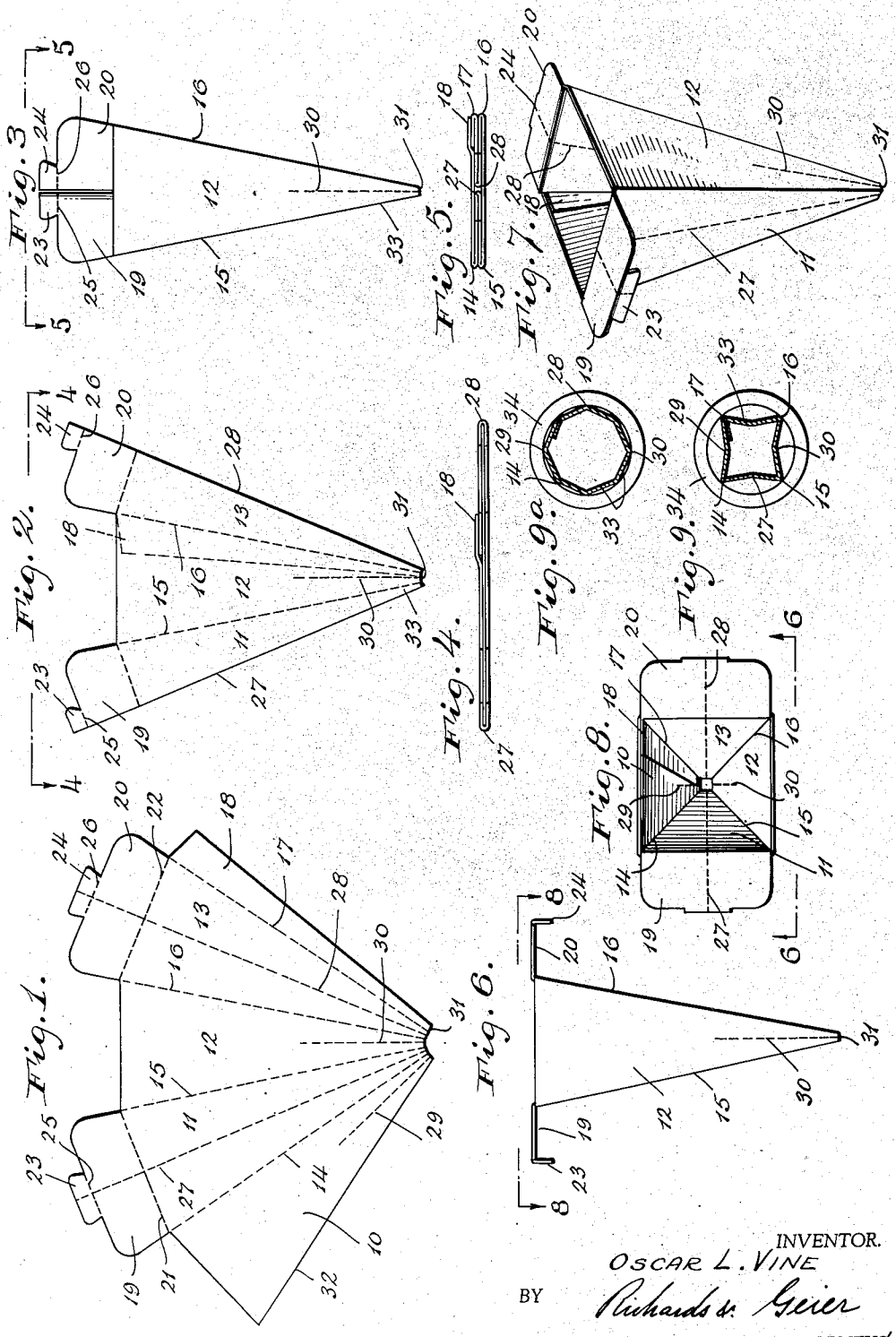

INVENTOR.
OSCAR L. VINE
BY Richards & Geier
ATTORNEYS

Nov. 30, 1937. O. L. VINE 2,100,888

COLLAPSIBLE PAPER FUNNEL CONSTRUCTION

Filed Jan. 27, 1936 2 Sheets-Sheet 2

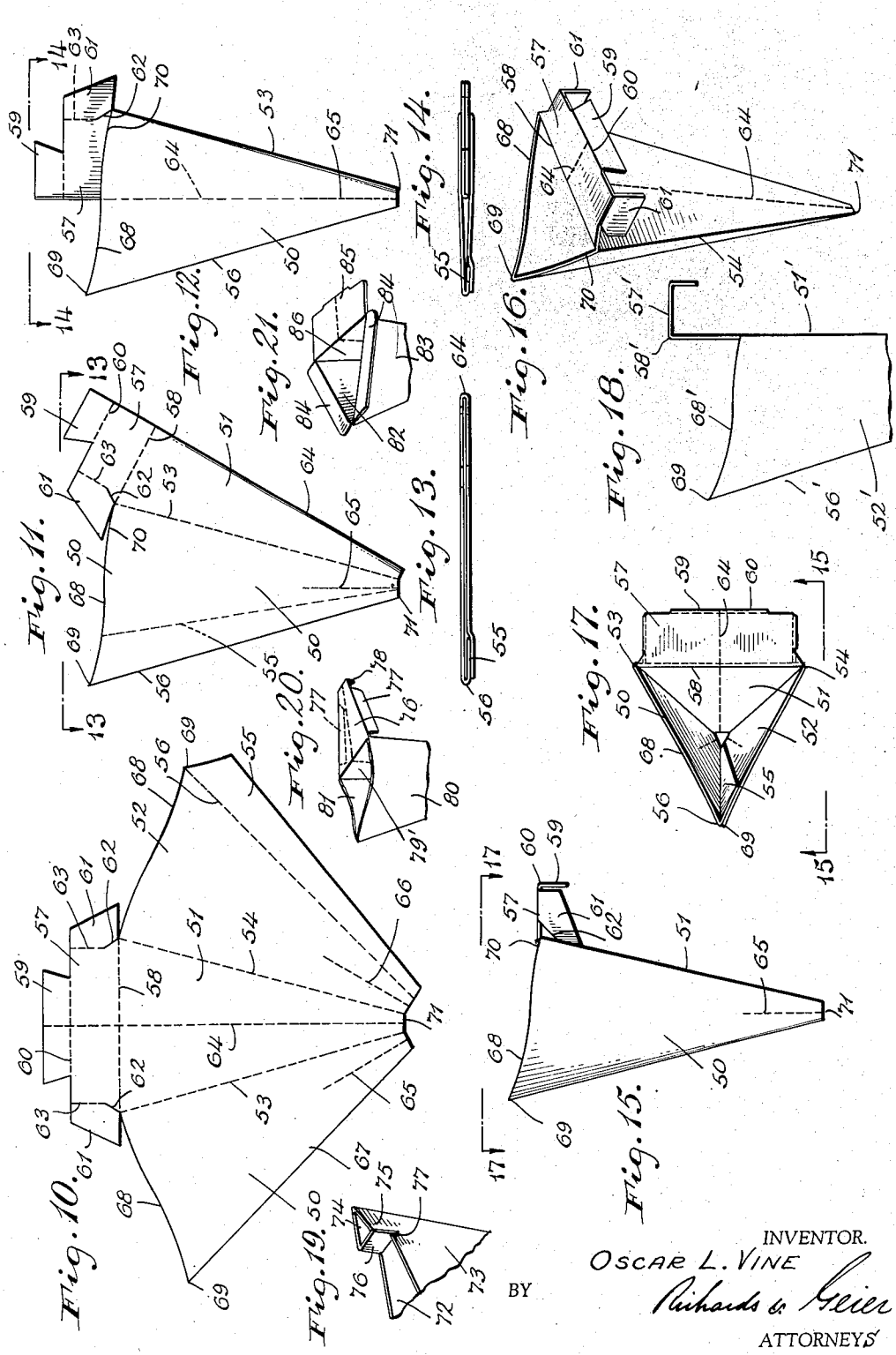

Fig. 10.

Fig. 11.

Fig. 12.

Fig. 13.

Fig. 14.

Fig. 15.

Fig. 16.

Fig. 17.

Fig. 18.

Fig. 19.

Fig. 20.

Fig. 21.

INVENTOR.
OSCAR L. VINE
BY Richards & Geier
ATTORNEYS

Patented Nov. 30, 1937 2,100,888

UNITED STATES PATENT OFFICE

2,100,888

COLLAPSIBLE PAPER FUNNEL CONSTRUCTION

Oscar L. Vine, New York, N. Y.

Application January 27, 1936, Serial No. 60,974

10 Claims. (Cl. 226—38)

The present invention relates to a collapsible paper funnel construction.

It is among the objects of the present invention to provide a collapsible paper funnel construction, the blanks of which may be readily made by paper stamping and cutting machinery in one operation at very low cost, which may be readily packaged and distributed in collapsed condition to householders and other persons and which may be readily expanded for usage.

Another object is to provide an inexpensive paper funnel construction of light weight and of such low cost that the funnel may be discarded after usage.

Other objects will be obvious or will be apparent during the course of the following specification.

In accomplishing the above objects, it has been found most satisfactory to stamp or cut the paper blanks in more or less triangular form depending on whether the funnel is to be three, four or more sided, and the last side section is preferably provided with a flap to connect the extreme ends of the blank together and to complete the funnel construction.

In the formation of the blank, a series of bend and fold lines are formed into the paper material with cutting of the outline. These bend or fold lines enable collapsing of the funnel, and thereafter extension of it into an inverted pyramidal structure, and also permit better conformation of the end of the funnel with the mouth of the bottle or container into which the liquid is to be poured through the funnel.

For the former purpose, the bend or fold lines extend the entire depth of the blank while for the latter purpose additional intermediate lines are provided extending substantially vertically only through the lower portion of the blank and between the adjacent fold lines.

It is a particular feature of the present invention that an extension flap is provided associated with one of the sides of the funnel which is normally bent in half or in sections when the funnel is collapsed.

This flap may constitute an upward extension of the side wall and is desirably provided with convenient gripping portions. When extended or bent away from the wall to which it is attached, it causes the funnel to extend and hold its shape during the pouring operation.

If desired, this flap may also be provided with reenforcements which will be positioned against the body or adjacent wall of the funnel supported in position.

The above and other objects will appear more clearly from the following detailed description which when taken in connection with the accompanying drawings, will illustrate the preferred embodiments of the inventive idea.

Figure 1 is a plan view of one type of blank.

Figures 2 and 3 are side views of the blank with its ends attached to form a funnel and in collapsed position; Figure 2 being a view with the walls collapsed in outwardly extending position and Figure 3 being a side view of the walls in inwardly extending position.

Figures 4 and 5 are top views upon the lines 4—4 and 5—5 of Figure 3 respectively, indicating how the funnel is collapsed.

Figure 6 is a side view of the funnel construction of Figures 2 and 3 in extended position.

Figure 7 is a top perspective view of the structure of Figure 6.

Figure 8 is a top view of the extended structure of Figure 6 upon the line 8—8 of Figure 6.

Figures 9 and 9a are respectively transverse sectional views on enlarged scale showing engagement of the bottom of the funnel with the mouth of the bottle or container into which liquid is to be poured.

Figure 10 is a plan view of a blank of another embodiment.

Figures 11 and 12 are side views of said blank formed into a funnel similar to Figures 2 and 3 with the funnel collapsed and extended and in inturned position respectively.

Figures 13 and 14 are top views respectively on the lines 13—13 and 14—14 of Figures 11 and 12, showing the funnel in collapsed position.

Figures 15, 16, and 17 are respectively side, top perspective and top views of the funnel in extended position.

Figure 18 is a fragmentary side view of another embodiment similar to the embodiment of Figures 10 to 17.

Figures 19 to 21 are fragmentary top perspective of alternative constructions.

Referring to Figure 1, the blank as formed is provided with four triangular sections 10, 11, 12, and 13 provided with bend lines 14, 15, 16, and 17 for forming the sides of the funnels and also provided with the end flap 18.

The sections 11 and 13 are provided with flap extensions 19, 20 which are provided with bend lines 21, 22 at the top of the sections 11 and 13. These extensions 19 and 20 are provided with end pieces 23, 24 at the upper ends thereof, which have the bend lines 25, 26.

Through the middle of the sections 11 and 13 pass the bend lines 27, 28 which extend the entire length of the sections while the intermediate sections 10 and 12 are provided with partial bend lines 29 and 30.

It will be noted the bottom of the sections 10, 11, 12, and 13 are cut off as indicated at 31 to form a mouth for the funnel.

In assembling the funnel from the blank, as indicated in Figure 1, the flap 18 is shown in Figure 20 attached to the end 32 of the section

10. The funnel thus formed may be conveniently collapsed by folding the sections 11, 13 with their flaps 19, 20 upon the fold lines 27, 28, said fold lines extending outwardly as indicated at Figure 2 or inwardly as indicated in Figure 3.

To extend the funnel to the position as indicated in Figures 6, 7, and 8, the flaps 19 and 20 are bent downwardly and this will automatically straighten out the sections 11 and 13 across the bend lines 27 and 28.

The flaps 19, 20 not only will reenforce the funnel when extended as shown in Figures 6 to 8, but in addition will form a convenient finger support to hold the funnel.

In Figures 9, 9a, is indicated how the lower end of the funnel 33 adjacent its mouth 31 may be inserted into the neck of a bottle 34 and conform itself to such bottle.

As indicated in Figures 9 and 9a the funnel may bend inwardly across the bend lines 27, 28, 29, 30 or it may be bent outwardly across said same bent lines.

Referring to Figure 10 which shows the blank of the form of Figures 11 and 12 and 15 to 17, there are provided triangular sections 50, 51, and 52 separated by the fold lines 53 and 54. The section 52 at its outside edge carries the flap 55 having the fold lines 56. The middle section 51 carries the flap 57 having the fold line 58 which flap is provided with an extension 59 having the fold line 60.

The sides of the flap 57 are provided with extensions 61 which are partly slitted, as indicated at 62, to be separated from the middle portion of the flap 57 and which are also provided with the bend lines 63.

The section 51 is provided with a vertical bend line 64 which extends entirely through the section 51 and the flaps 57 and 59. The sections 50 and 52 are provided with partial bend lines 65, 66, which together with the other bend lines 53, 54, 56 and 64 enable the accommodation of the end 71 of the funnel by the neck of a container, as shown in Figures 9 and 9a.

In Figures 11 to 14 are shown the container assembled from the blank of Figure 10 with the flap 55 glued or otherwise adhesively attached to the edge portion 67 of the section 50. The section 51 along its bend line 64 may be folded outwardly as indicated in Figure 11 and inwardly as indicated in Figure 12.

By turning down the flap 57, the bent side 51 will be straightened and the funnel extended as shown in Figures 15 to 17.

When extended, the tabs or end extension 61 will rest against the rear section 51 of the funnel and reenforce both the funnel and the holder 57, 59.

It will be noted, as shown in Figures 15 and 16, that the handle portion 57, 59, may be most conveniently grasped by the hand of the person carrying out the pouring operation.

In Figures 10 to 17, it will be noted that the upper edge of the funnel is curved, as indicated at 68, risen to the peak or spout 69, the rear upper edge of the funnel, as indicated at 70, terminating on a level with the flap 57 when it is bent downwardly. The peak or spout 69 may be used for pouring back the surplus.

If desired, the handle portion 57, 59 may be caused to extend substantially above the upper edge 68 of the funnel.

Referring to Figure 18 in which similarly functioning parts are indicated by the same numerals primed, the upper edge of the funnel is cut substantially below the flap 57' of the handle with the bend line 58' at the top of the section 51 being substantially above the top of the sections 50' to 52'.

For many purposes, this enables more convenient handling and manipulation of the funnel and is advantageous in many respects.

Figures 19, 20, and 21 show alternative constructions.

In Figure 19 the sides 72 and 73 are provided with upward extensions 74 and 75. The extension 74 is provided with the tongue 76, slit at 77, to lock over the side 75.

In Figure 20, the handle flap 76 with its side flaps 77 and end flap 78 is elongated so as to be readily grasped by the hand. The flap 76 extends from the rear side 79, the funnel also having sides 80 and 81.

In Figure 21, the sides 82, 83 of the funnel are provided with the edge flaps 84—84 and the rear flap 85 the edge flaps enabling liquid to be poured into the funnel more readily.

The essential feature of the present invention are the extension flaps 20 of Figure 1 and 57 of Figure 10, which enable the funnel to be readily extended for usage from the collapsed position, as shown in Figures 2 and 3 and 11 and 12.

The paper material of the funnel may be replaced by other flexible materials such as transparent sheet regenerated cellulose or the funnel may be treated with suitable antiseptic compounds or water proofing compounds or grease proofing compounds, which would render it resistant to water and grease and also give it antiseptic properties. For example, the paper material may be treated with gelatine, glue, casein, peroxide of organic acids, particularly the higher fatty acids, and if desired, the funnel may also be treated with paraffin or wax or similar plastic materials.

The number and relative size of the sections 10 to 13 of Figure 1 and 50 to 52 of Figure 10 may be varied so that there may be five, six or more sections and the number of flaps, as indicated in Figures 1 and 10 may also be increased or decreased in number.

The ends 23 and 24 of Figures 6 to 8 and 58 of Figures 15 to 16 act as stiffening flaps to give additional support to the flaps 19, 20 and 57 respectively, enabling said flaps 19, 20 and 57 to be held in more rigid fashion.

The invention, however, is not intended to be restricted to any particular construction or arrangement of parts or to any particular application of any such construction, or to any specific method of operation, or manner of use, or to any of various details thereof, herein shown and described, as the same may be modified in various particulars or be applied in many varied relations without departing from the spirit and scope of the claimed invention, the practical embodiments herein illustrated and described merely showing some of the various features entering into the application of the invention.

What is claimed is:

1. A collapsible paper funnel construction consisting of a plurality of triangular sections, one of which is provided with a flap extension to hold the funnel extended when it is being utilized, said triangular section and said flap extension being provided with a continuous crease enabling said triangular section and flap extension to be folded together and said paper funnel to be collapsed when the flap extension is in the same plane as said triangular section and said flap extension

causing extension of said funnel when the flap extension is turned away from said triangular section.

2. A collapsible paper funnel construction consisting of a plurality of triangular sections, one of which is provided with a flap extension to hold the funnel extended when it is being utilized, said triangular section and said flap extension being provided with a continuous crease enabling said triangular section and flap extension to be folded together and said paper funnel to be collapsed when the flap extension is in the same plane as said triangular section and said flap extension causing extension of said funnel when the flap extension is turned away from said triangular section, said flap extension being provided with side tabs to support the funnel when extended.

3. A collapsible paper funnel construction consisting of a plurality of triangular sections, one of which is provided with a flap extension to hold the funnel extended when it is being utilized, said triangular section and said flap extension being provided with a continuous crease enabling said triangular section and flap extension to be folded together and said paper funnel to be collapsed when the flap extension is in the same plane as said triangular section and said flap extension causing extension of said funnel when the flap extension is turned away from said triangular section, said flap extension being provided with an end tab which together with the flap extension will form a convenient finger piece to support the funnel when extended.

4. A collapsible paper funnel construction consisting of a plurality of triangular sections, one of which is provided with a flap extension to hold the funnel extended when it is being utilized, said triangular section and said flap extension being provided with a continuous crease enabling said triangular section and flap extension to be folded together and said paper funnel to be collapsed when the flap extension is in the same plane as said triangular section and said flap extension causing extension of said funnel when the flap extension is turned away from said triangular section, said flap and its attached section being provided with a fold line by means of which the section may be collapsed inwardly or outwardly when the funnel is collapsed.

5. A blank for a paper funnel construction comprising three triangular sections arranged side by side and connected to each other by bend lines with the end section having an attachment flap and one of the other sections having a flap extension flap at its end, the upper edge of the funnel having a curved edge portion which, when the funnel is assembled will form a peak opposite the extension flap, said triangular section and said flap extension being provided with a continuous crease enabling said triangular section and flap extension to be folded together and said paper funnel to be collapsed when the flap extension is in the same plane as said triangular section and said flap extension causing extension of said funnel when the flap extension is turned away from said triangular section.

6. A blank for a paper funnel construction comprising a plurality of triangular sections attached side to side by bend lines with an end attachment flap and an extension flap from one of said sections adapted to serve as a handle when the funnel is extended, said triangular section and said flap extension being provided with a continuous crease enabling said triangular section and flap extension to be folded together and said paper funnel to be collapsed when the flap extension is in the same plane as said triangular section and said flap extension causing extension of said funnel when the flap extension is turned away from said triangular section.

7. A collapsible paper funnel construction consisting of a plurality of triangular sections, one of which is provided with a flap extension to hold the funnel extended when it is being utilized, said triangular section and said flap extension being provided with a continuous crease enabling said triangular section and flap extension to be folded together and said paper funnel to be collapsed when the flap extension is in the same plane as said triangular section and said flap extension causing extension of said funnel when the flap extension is turned away from said triangular section and the others of which are provided with short extension flaps to enable liquid to be more readily poured into the funnel.

8. A collapsible paper funnel construction consisting of a plurality of triangular sections, one of which is provided with a flap extension to hold the funnel extended when it is being utilized, said triangular section and said flap extension being provided with a continuous crease enabling said triangular section and flap extension to be folded together and said paper funnel to be collapsed when the flap extension is in the same plane as said triangular section and said flap extension causing extension of said funnel when the flap extension is turned away from said triangular section, said extension including a rectangular portion with side flaps, which extension is readily grasped by the hand.

9. A collapsible paper funnel construction consisting of a plurality of triangular sections, one of which is provided with a flap extension to hold the funnel extended when it is being utilized, said triangular section and said flap extension being provided with a continuous crease enabling said triangular section and flap extension to be folded together and said paper funnel to be collapsed when the flap extension is in the same plane as said triangular section and said flap extension causing extension of said funnel when the flap extension is turned away from said triangular section, and another of which is provided with a tongue having a slit to be locked over onto the other section, said tongue being positioned opposite said flap extension.

10. A collapsible paper funnel construction consisting of a plurality of triangular sections, one of which is provided with a flap extension to hold the funnel extended when it is being utilized, said triangular section and said flap extension being provided with a continuous crease enabling said triangular section and flap extension to be folded together and said paper funnel to be collapsed when the flap extension is in the same plane as said triangular section and said flap extension causing extension of said funnel when the flap extension is turned away from said triangular section, the top of said funnel construction rising to a spout opposite to said flap extension whereby surplus liquid may be dumped out of the funnel.

OSCAR L. VINE.