(19) Octrooicentrum Nederland

(11) **2016135**

(12) B1 **OCTROOI**

(21) Aanvraagnummer: **2016135**

(22) Aanvraag ingediend: **21/01/2016**

(51) Int. Cl.:
A01K 31/00 (2016.01) **A01K 31/18** (2016.01) **A01K 39/014** (2016.01) **A01K 41/00** (2016.01) **A01K 45/00** (2016.01)

(41) Aanvraag ingeschreven:
25/07/2017

(43) Aanvraag gepubliceerd:
-

(47) Octrooi verleend:
25/07/2017

(45) Octrooischrift uitgegeven:
17/08/2017

(73) Octrooihouder(s):
HatchTech Group B.V. te Veenendaal.

(72) Uitvinder(s):
Tjitze Meter te Veenendaal.

(74) Gemachtigde:
ir. M.F.J.M. Ketelaars c.s. te Den Haag.

(54) **Method of feeding hatched chicks in a climate chamber.**

(57) The invention relates to a method of feeding hatched chicks in a climate chamber during a first stage of life from hatching, the method comprising;
a) controlling the temperature and humidity in the climate chamber,
b) operating a ventilation means to generate an air flow through the climate chamber, and
c) supplying the newly hatched chicks with live feed in the climate chamber.

NL B1 2016135

Dit octrooi is verleend ongeacht het bijgevoegde resultaat van het onderzoek naar de stand van de techniek en schriftelijke opinie. Het octrooischrift komt overeen met de oorspronkelijk ingediende stukken.

Method of feeding hatched chicks in a climate chamber

Background

The present invention relates to a method of feeding hatched chicks in a climate chamber during a first stage of life from hatching, the method comprising;

a) controlling the temperature and humidity in the climate chamber,

b) operating a ventilation means to generate an air flow through the climate chamber.

Such a climate chamber is known from WO2011/133022 A1.

Summary of the invention

The invention aims to provide a more natural start for young chicks in an industrial environment like a climate chamber.

Another object of the invention is to improve a method of feeding hatched chicks in a climate chamber in that a problem with known methods is at least partly solved.

Yet another object of the invention is to provide an alternative method of feeding hatched chicks in a climate chamber.

According to a first aspect of the invention this is realized with a method of feeding hatched chicks in a climate chamber during a first stage of life from hatching, the method comprising;

a) controlling the temperature and humidity in the climate chamber,

b) operating a ventilation means to generate an air flow through the climate chamber, and

c) supplying the newly hatched chicks with live feed in the climate chamber.

The supplying of the newly hatched chicks with live feed in the climate chamber stimulates natural behaviour of the young chicks. This will result in an improved quality of the young chicks. This improved quality will have a positive effect during the rest of the life of the chick.

In an embodiment of the invention, the live feed comprises insects and/or worms. In particular the live feed comprises one or more of the group earthworms, larvae, silkworms, mealworms and combinations thereof. Conceivable types of insects are black soldier fly larvae, housefly larvae, silkworms, and yellow mealworms.

In an embodiment of the invention, the first stage of life comprises the first 1 to 4 days of life and the method comprises;

d) transferring newly hatched chicks to the climate chamber within the first 1 to 4 days of life before supplying the newly hatched chicks with live feed in the climate chamber.

In an embodiment of the invention, the climate chamber is transportable and the method comprises;

e) performing step c) during transport of the climate chamber.

Supplying the newly hatched chicks with live feed in the climate chamber during transport improves chick quality even during transport of the chicks. Transport steps between a hatchery and a breeding farm normally have a negative effect on animal wellbeing.

In an embodiment of the invention, the method comprises;

f) transferring newly hatched chicks to the transportable climate chamber.

In an embodiment of the invention, the method comprises before performing step c);

g) arranging eggs in the climate chamber, and

h) incubating the eggs in the climate chamber till hatching occurs.

This is even more beneficial for chick quality since handling of eggs and/or newly hatched chicks is reduced to a minimum.

In an embodiment of the invention, the climate chamber comprises a climate chamber compartment and at least step c) is performed in the climate chamber compartment. The division of the climate chamber into compartments helps to industrialize and standardize the process steps of the method.

In an embodiment of the invention, the climate chamber comprises a crate for accommodating a group of young chicken, like a group consisting of 40 to 100 young chicken wherein the step c) comprises supplying the newly hatched chicks with live feed in the crate and wherein the crate is preferably arranged in the climate chamber compartment. This even more helps to industrialize and standardize the process steps of the method. In addition, it reduces handling of individual eggs and/or newly hatched chicks.

In an embodiment of the invention, the climate chamber comprises one or more troughs and step c) comprises containing the live feed in the one or more troughs.

In an embodiment of the invention, the one or more troughs comprises means for maintaining the live feed contained in the one or more troughs. This prevents unwanted spread of live feed through the climate chamber. These means are desireable since the live feed may want to climb out of the trough.

In an embodiment of the invention, the means for maintaining the live feed contained in the one or more troughs comprises one or more selected from a grating, an edge with a sloped section, a concave section as seen from an interior of the trough, an edible enclosure that surrounds the live feed, and a trough interior surface having a surface structure to impede climbing of live feed out of the trough. The sloped section hinders climbing of live feed out of the trough. The surface structure that impedes climbing out of the trough may differ between types of live feed.

In an embodiment of the invention, the crate is provided with ventilation openings on two opposite sides of the crate in order to allow the air flow through the climate chamber to pass the crate.

In an embodiment of the invention, the method further comprises i) providing a stack of a number of said crates.

In an embodiment of the invention, the climate chamber comprises a feed supply conduit coupled with crates, in particular all of the number of crates, and step c)

comprises transport of live feed through the feed supply conduit. This facilitates the supply of live feed to all chicks in the climate chamber.

In an embodiment of the invention, at least one side of the climate chamber or the at least one chamber compartment is delimited by a heat exchanger. In particular the climate chamber comprises at least two of said chamber compartments which are separated from one another by the heat exchanger. The heat exchanger helps to control the temperature in a chamber compartment by exchange of heat between the exchanger and the air flow through the climate chamber.

According to a further aspect of the invention this is realized with a climate chamber for rearing newly hatched chicks, the climate chamber comprising one or more troughs having means for maintaining live feed contained in the one or more troughs. This reduces the possibility of unwanted spread of live feed through the climate chamber.

In an embodiment of the climate chamber, the means for maintaining the live feed contained in the one or more troughs comprises one or more selected from a grating, an edge with a sloped section, a concave section as seen from an interior of the trough, an edible enclosure that surrounds the live feed, and a trough interior surface having a surface structure to impede climbing of live feed out of the trough.

In an embodiment of the invention, the climate chamber contains chicks and the at least one or more troughs contains live feed.

In an embodiment of the invention, the climate chamber comprises a crate for accommodating a group of young chicken, and the at least one or more troughs is arranged within the crate and forms part of the crate. It will be clear that within the crate may include a trough that is partly within the outline of the crate. The trough is part of the crate and accesible from within the crate. It is however also conceivable that the trough is part of the climate chamber and accesible from within the crate.

The invention further relates to a device comprising one or more of the characterising features described in the description and/or shown in the attached drawings.

The invention further relates to a method comprising one or more of the characterising features described in the description and/or shown in the attached drawings.

The various aspects discussed in this patent can be combined in order to provide additional advantageous advantages.

Description of the drawings

The invention relates to hatching and feeding of newly hatched birds in a controlled environment during their first one or two days or some days thereafter. Industry practice is to provide newly hatched birds with no additional food at all. Occasionnaly, food may be provided that however may not be perceived as attractive in a natural way to the newly hatched birds.

According to the invention, newly hatched birds are provided with live feed, like mealworms. This type of feed leads to more natural environment as perceived by the bird.

The invention will be further elucidated referring to the drawings wherein shown in:

Fig. 1 in perspective view a climate chamber for hatching chicks according to the method of the invention;

fig. 2 a cross sectional side view of a crate for use in the climate chamber of fig. 1;

fig. 3a and 3b embodiments of the trough, of the crate according to fig. 2;

fig. 4 a stack of crates for use in the climate chamber of fig. 1;

fig. 5 a side view of transportable climate chamber;

fig. 6 a stack of another embodiment of crates;

fig. 7-10; different embodiments of a trough for use in a crate of fig. 2 of 6.

Detailed description of embodiments

Fig. 1 shows in perspective view a climate chamber 1 for hatching chicks 3 according to the method of the invention. The climate chamber 1 is configured to control the temperature and humidity in the climate chamber such that newly hatched chicks can be fed in the climate chamber 1. The climate chamber 1 comprises a ventilation means 5 to generate an air flow A, Ar through the climate chamber 1.

The climate chamber 1 has a bottom wall, a top wall (not shown), a front and rear side wall and a first and a second end wall that enclose the interior of the climate chamber 1 to allow a recirculating air flow. The climate chamber 1 comprises a number of heat exchangers 3 for heating or cooling the climate chamber 1. The temperature of the climate chamber is controlled through heat exchange between the air flow and the heat exchangers 3. The heat exchangers 3 are air-permeable to allow the air flow to pass the heat exchangers 3.

Here, the climate chamber 1 is subdivided into climate chamber compartments 4. The air flow A flows from the ventilations means 5 through all climate chamber compartments 4 and returns through a corridor or passageway back to the ventilation means 4. Such a climate chamber compartment 4 is configured to match the dimensions of a stack 13 of crates 2. Such a stack 13 is normally handled with a trolley (not shown).

Fig. 2 shows a cross sectional side view of a crate 2 for use in the climate chamber 1 of fig. 1. The crate 2 is configured for accommodating a group of young chicken 3, like a group consisting of 40 to 100 young chicken. The crate 2 is stackable. Therefore, the bottom face 11 can be placed on top of another crate 2. The chick 3 rests on a floor element 10. The crate 2 comprises a trough 6. Here, the crate 2 has two troughs 6. The two troughs are arranged at opposite sides of the crate 2. The trough 6 contains live feed 7 in order to supply the newly hatched chicks 4 with live feed 7 in the crate 2. The live feed may comprises insects and/or worms, in particular one or more of the group earthworms, larvae, silkworms, mealworms and combinations thereof.

Fig. 3a and 3b show each an embodiment of a trough 6 of the crate 2 according to fig. The trough 6 of fig. 3b is subdivided by a partition element 8. The partition element 8 divides the trough 6 such that there is an intake opening 39 for filling the trough and an outlet opening, different from the intake opening, from which outlet opening the chicks can take their food.

Fig. 4 shows a stack 13 of crates 2 for use in the climate chamber of fig. 1. In particular the stack 13 is placed in a climate chamber compartment 4. Here, the stack 13 adjoins a heat exchanger 3. In this case, the troughs 6 are arranged with the heat exchanger 3 and the troughs 6 are accessible by the chicks 3 from the interior of the crate 2.

The crates 2 shown in the figures 2 – 4 are used in the following way in the method of feeding hatched chicks 3 in a climate chamber 1 during a first stage of life from hatching. Hatched chicks 3 are placed in the interior of the crate 2. These newly hatched chicks are transferred to the climate chamber 1 by placing the crate 2, in particular a stach 13 of crates into the climate chamber 1. These newly hatched chicks are transferred to the climate chamber 1 within the first 1 to 4 days of life, in particular as soon as possible after hatching. The chicks 3 are supplied with live feed 7 in the climate chamber 1. Therefore, the live feed 7 is placed in troughs 6. The live feed 7 contains e.g. mealworms. These troughs can be part of the crate 2, see fig. 2-3, and/or part of the climate chamber 1, see fig. 4.

As an option the climate chamber is transportable. Fig. 5 shows a side view of a transportable climate chamber designed as a trailer 14. The trailer 14 comprises ventilation means 15 to drive an air flow 16 that runs through compartments and heat exchangers 17. The compartments and heat exchangers 17 are schematically shown.

In use, the trailer 14 travels while the interior of the trailer is filled with stacks of crates 2. It is conceivable that both type of crates 2 as shown in fig. 2-4 and fig. 6 can be transported with the trailer 14.

Fig. 6 shows a stack of another embodiment of crates 2. An egg tray 18 is shown in assembly with a crate 2. Here, a stack of two assemblies of a crate 2 and an

egg tray 18 is depicted. The crate 2 provides a chicken accommodation space 22 for hatching and rearing chicken. The crate 2 comprises troughs 6 at opposite sides of the crate 2. The, here separate, egg tray 18 is arranged on top of the crate 2. The crate 2 has an open top such that a chicken may enter the chicken accommodation space 22 through a passage 21. The tray 18 contains a number of eggs 19. The tray 18 comprises a number of egg accommodation spaces 20. In this space 20 the eggs 19 are firmly held such that the eggs 19 may be hatched in a controlled manner. The tray 1 has a number of passages 21 for a chicken through which passage 21 a chicken hatched from an egg 19 may pass through the tray 18 and enter the chicken accommodation space 22 located below the tray 18.

The crates 2 shown in figure 6 differ in use with the crates 2 of figures 2-4 in that the chicks hatch directly above the crate 2 and make their own way into the interior 22 of the crate 2. Therefor, the step of transfer of newly hatched chicks from outside to the inside of the climate chamber 1 is not required. Instead, eggs are transferredi into the inside of the climate chamber 1.

In fig. 7-10 different embodiments of a troughs for use in a crate of fig. 2 or 6 are shown. Al the troughs 6 have a bottom 12 to support the live feed 7, and an inner 27 and outer 28 side wall. Here, the trough 6 is subdivided by wall elements 26. All the troughs 6 comprise means for maintaining the live feed 7 contained in the trough 6. The troughs 6 differ in the type of means for maintaining the live feed 7 contained in the trough 6, as will be explained.

Fig. 7 shows a grating 23 to maintain the live feed 7 in the trough 6. The grating 23 has openings 24 and ribs 25 between the openings 24. As an example a wall elements 26 has a trough interior surface 41 having a surface structure to impede climbing of live feed out of the trough. The surface structure is schematically depicted and can be obtained for example when manufacturing the interior surface, or by tooling or coating the interior surface.

Fig 8 shows opposite trough walls 27, 28 each provided with a respective sloped section 29, 30 to maintain the live feed 7 in the trough 6. These sloped sections 29, 30 narrow the outlet opening 40.

Fig 9 shows opposite trough walls 27, 28 each provided with a respective sloped section 32, 34 to maintain the live feed 7 in the trough 6. These sloped sections 32, 34 are arranged with a respective projection 31, 33.

Fig 10 shows opposite trough walls 27, 28 each provided with a respective concave section (36, 37) as seen from an interior of the trough 6 to maintain the live feed 7 in the trough 6. These concave section 36, 37 are arranged with a respective projection 31, 33.

Fig 3A schematically shows as a dashed line an edible enclosure 38 that surrounds the live feed 7 to maintain the live feed 7 in the trough 6.

It will also be obvious after the above description and drawings are included to illustrate some embodiments of the invention, and not to limit the scope of protection. Starting from this disclosure, many more embodiments will be evident to a skilled person which are within the scope of protection and the essence of this invention and which are obvious combinations of prior art techniques and the disclosure of this patent.

Conclusies

1. Werkwijze voor het voeren van uitgekomen kuikens (3) in een klimaatkamer (1) gedurende een eerste levensfase vanaf uitkomst, waarbij de werkwijze omvat;
    a. regelen van de temperatuur en vochtigheid in de klimaatkamer,
    b. bedrijven van ventilatie-middelen (5) teneinde een luchtstroom door de klimaatkamer te genereren, en
    c. toedienen van levend voer (7) aan de pas uitgekomen kuikens in de klimaatkamer.

2. Werkwijze volgens conclusie 1, waarbij het levend voer insecten en / of wormen omvat.

3. Werkwijze volgens conclusie 2, waarbij het levende voer een of meer van de groep wormen, larven, zijderupsen, meelwormen en combinaties daarvan omvat.

4. Werkwijze volgens een der voorgaande conclusies, waarbij de eerste levensfase de eerste 1-4 levensdagen omvat en de werkwijze verder omvat;
    d. overbrengen van pas uitgekomen kuikens naar de klimaatkamer binnen de eerste 1-4 levensdagen alvorens het toedienen van levend voer aan de pas uitgekomen kuikens in de klimaatkamer.

5. Werkwijze volgens een voorgaande conclusie, waarbij de klimaatkamer transporteerbaar is en de werkwijze verder omvat;
    e. het uitvoeren van stap c) tijdens het transport van de klimaatkamer.

6. Werkwijze volgens conclusie 5, waarbij de werkwijze omvat; overbrengen van pas uitgekomen kuikens naar de transporteerbare klimaatkamer.

7. Werkwijze volgens een der voorgaande conclusies, waarbij de werkwijze verder omvat alvorens stap c);
    g. schikken van eieren in de klimaatkamer, en

h. het incuberen van de eieren in de klimaatkamer tot uitkomst optreedt.

8. Werkwijze volgens een der voorgaande conclusies, waarbij de klimaatkamer een klimaatkamercompartiment (4) omvat en ten minste stap c) wordt uitgevoerd in het klimaatkamercompartiment.

9. Werkwijze volgens een der voorgaande conclusies, waarbij de klimaatkamer een krat (2) omvat voor het opnemen van een groep jonge kippen, zoals een groep van 40 tot 100 jonge kippen waarbij de stap c) omvat het toedienen van levend voer aan de pas uitgekomen kuikens in het krat.

10. Werkwijze volgens conclusie 9, waarbij de krat is geplaatst in het klimaatkamercompartiment.

11. Werkwijze volgens een der voorgaande conclusies, waarbij de klimaatkamer één of meer troggen (6) omvat en stap c) omvat het houden van het levend voer in de één of meer troggen.

12. Werkwijze volgens conclusie 11, waarbij de één of meer troggen middelen (23) omvatten voor het behouden van het levend voer in de één of meer troggen.

13. Werkwijze volgens conclusie 12, waarbij de middelen voor het behouden van het levend voer in de één of meer troggen één of meer omvatten gekozen uit een rooster (23), een rand met een schuin gedeelte (29, 30, 32, 34), een concave gedeelte (36, 37) gezien vanuit het inwendige van de trog, een eetbare omhulling (38) die het levende voer omgeeft, en een binnenoppervlak (41) van de trog met een oppervlaktestructuur welke klimmen van levende voer uit de trog belemmert.

14. Werkwijze volgens een der voorgaande conclusies 9-13, waarbij het krat is voorzien van ventilatieopeningen (9) aan twee tegenoverliggende zijden van het krat teneinde de luchtstroom door de klimaatkamer door het krat te laten.

15. Werkwijze volgens een der voorgaande conclusies 9-14, verder omvattende stap i) het verschaffen van een stapel (13) van een aantal van de kratten.

16. Werkwijze volgens een der voorgaande conclusies 9-15, waarbij de klimaatkamer een voedingtoevoerleiding omvat verbonden met kratten, in het bijzonder alle van het aantal kratten, en stap c) transport omvat van levend voer door de voedingtoevoerleiding.

17. Werkwijze volgens een der voorgaande conclusies 8-16, waarbij ten minste één zijde van de klimaatkamer of het ten minste één klimaatkamercompartiment is begrensd door een warmtewisselaar (3).

18. Werkwijze volgens conclusie 17, waarbij de klimaatkamer ten minste twee klimaatkamercompartimenten (4) omvat die van elkaar worden gescheiden door de warmtewisselaar.

19. Klimaatkamer voor het opfokken van pas uitgekomen kuikens, waarbij de klimaatkamer één of meer troggen omvat met middelen voor het behouden van het levend voer in de één of meer troggen.

20. Klimaatkamer volgens conclusie 19, waarbij de middelen voor het behouden van het levend voer in de één of meer troggen één of meer omvatten gekozen uit een rooster (23) een rand met een schuin gedeelte (29, 30, 32, 34), een concave gedeelte (36, 37) gezien vanuit het inwendige van de trog, een eetbare omhulling (38) die het levende voer omgeeft, en een binnenoppervlak (41) van de trog met een oppervlaktestructuur welke klimmen van levende voer uit de trog belemmert.

21. Klimaatkamer volgens conclusie 19 of 20, waarbij de klimaatkamer kuikens houdt en de ten minste één of meer troggen levend voer houdt.

22. Klimaatkamer volgens een der voorgaande conclusies 19-21, waarbij de klimaatkamer een krat omvat voor het opnemen van een groep jonge kippen, en de ten minste één of meer troggen aangebracht zijn binnen de krat en deel uitmaakt van het krat.

-oooooo-

Fig. 1

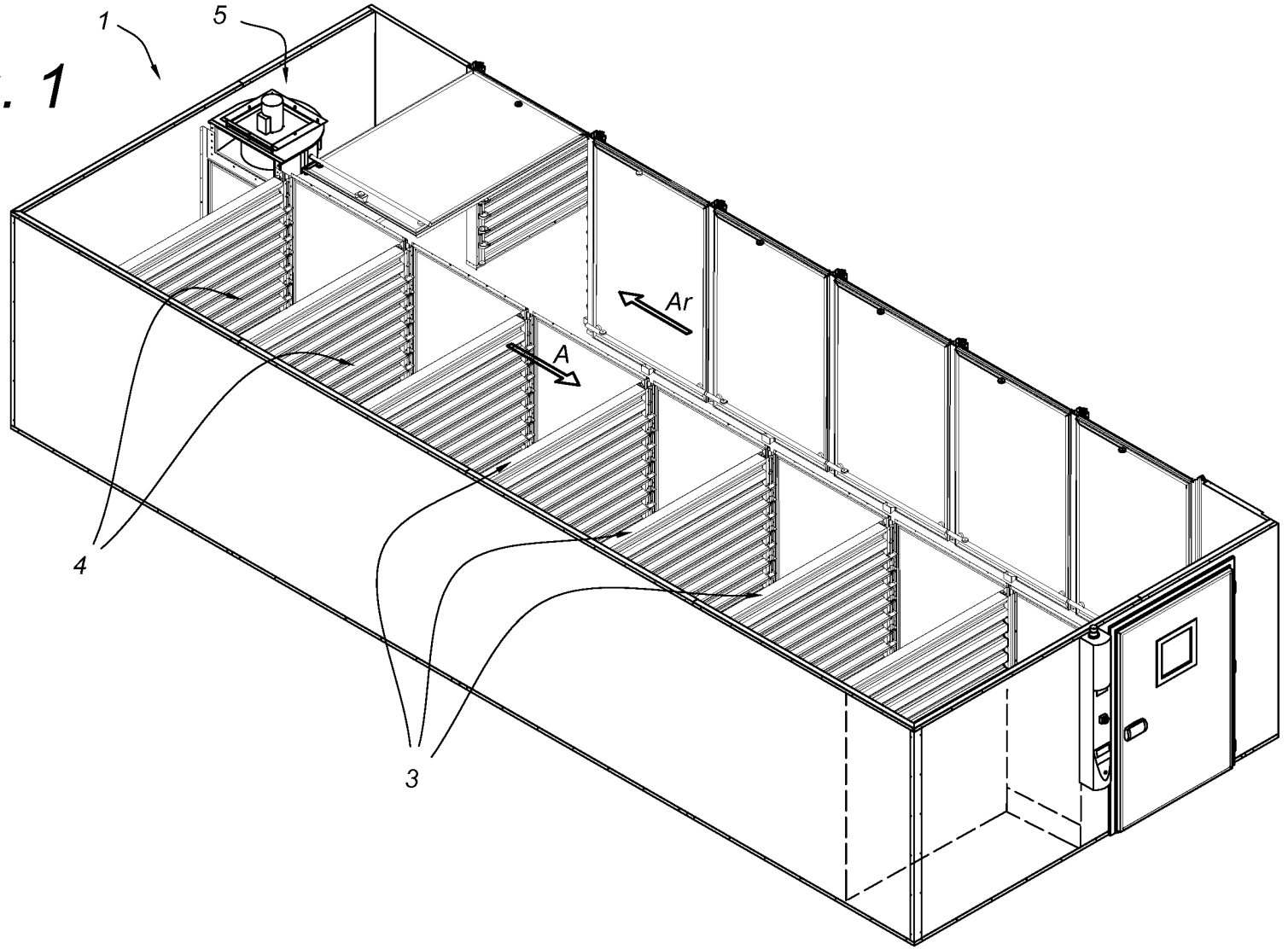

Fig. 2

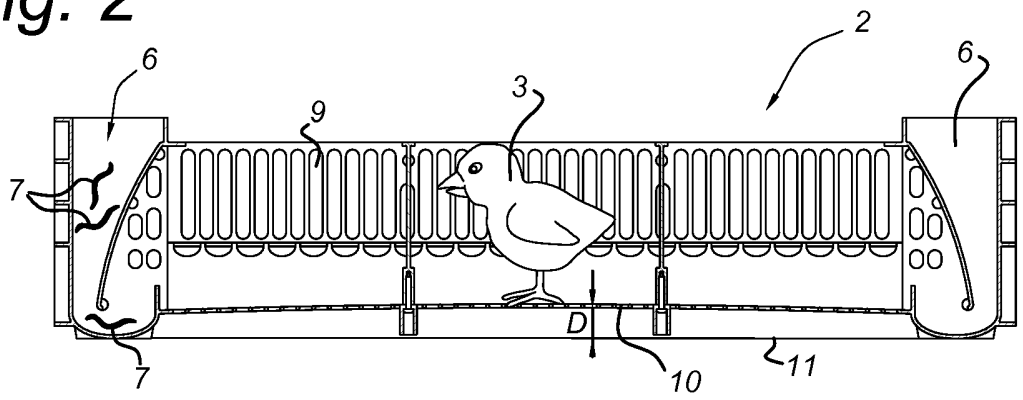

Fig. 3A

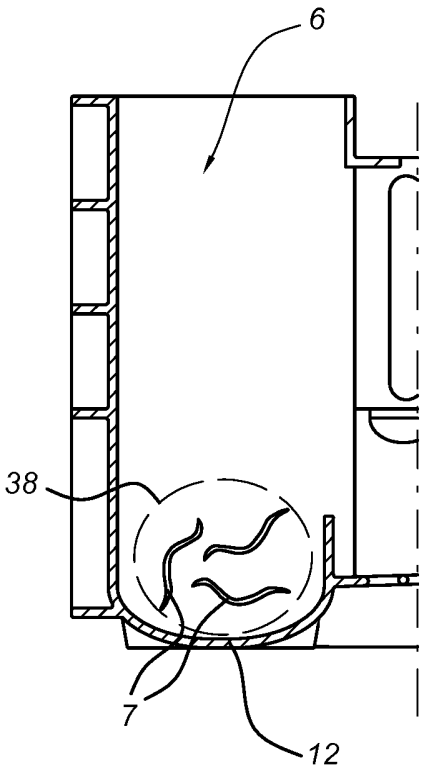

Fig. 3B

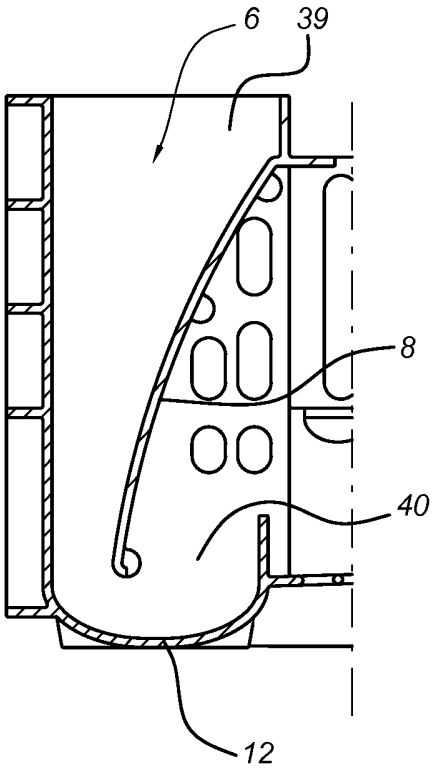

Fig. 4

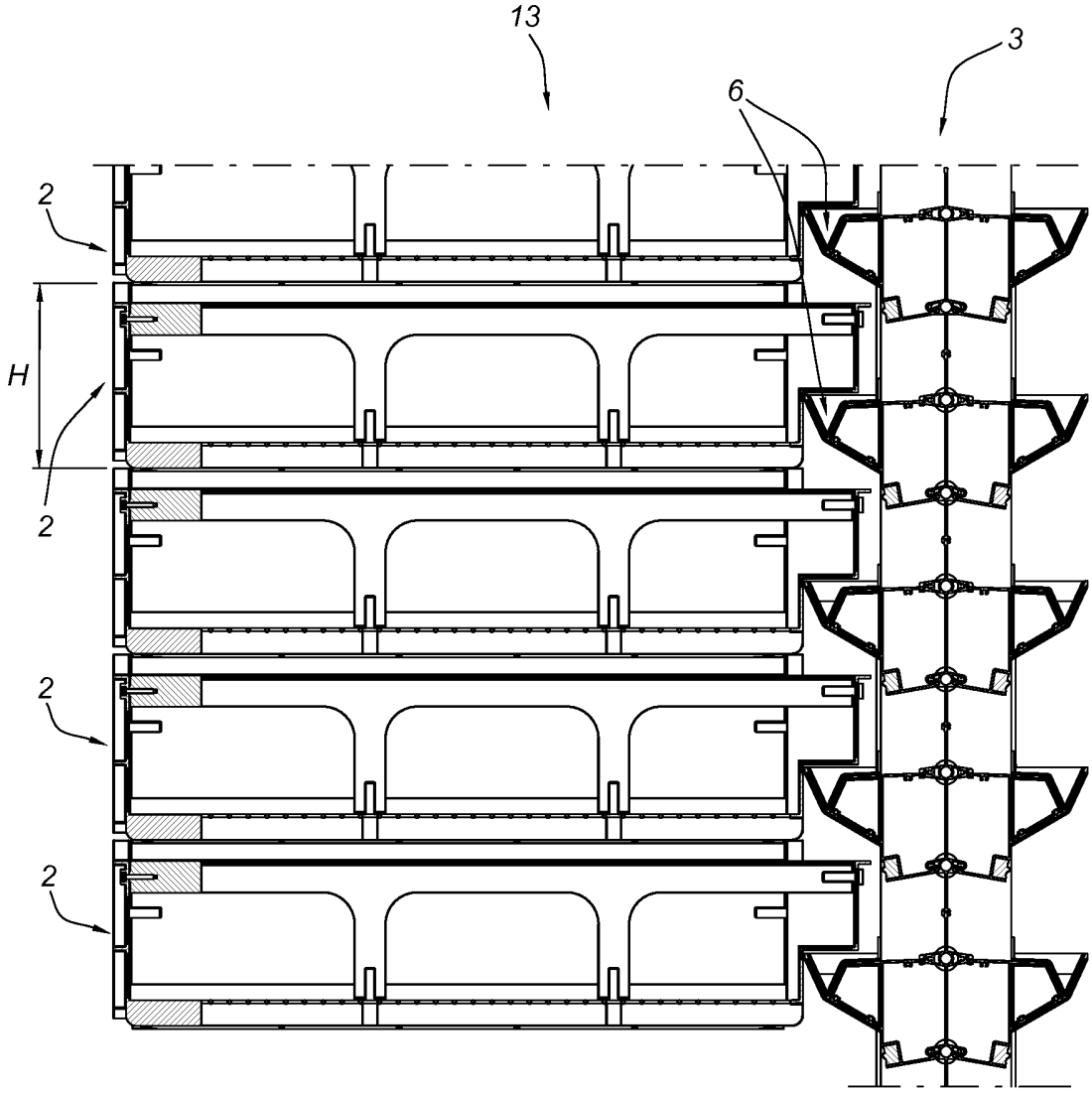

Fig. 5

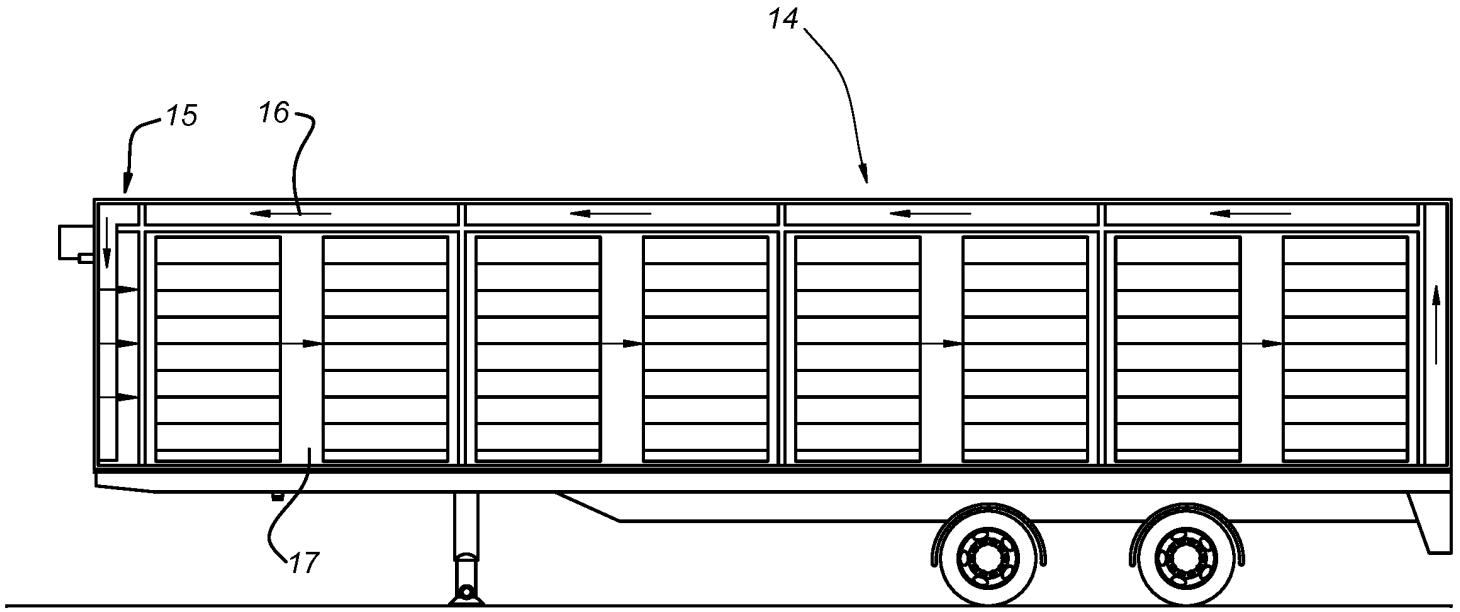

Fig. 6

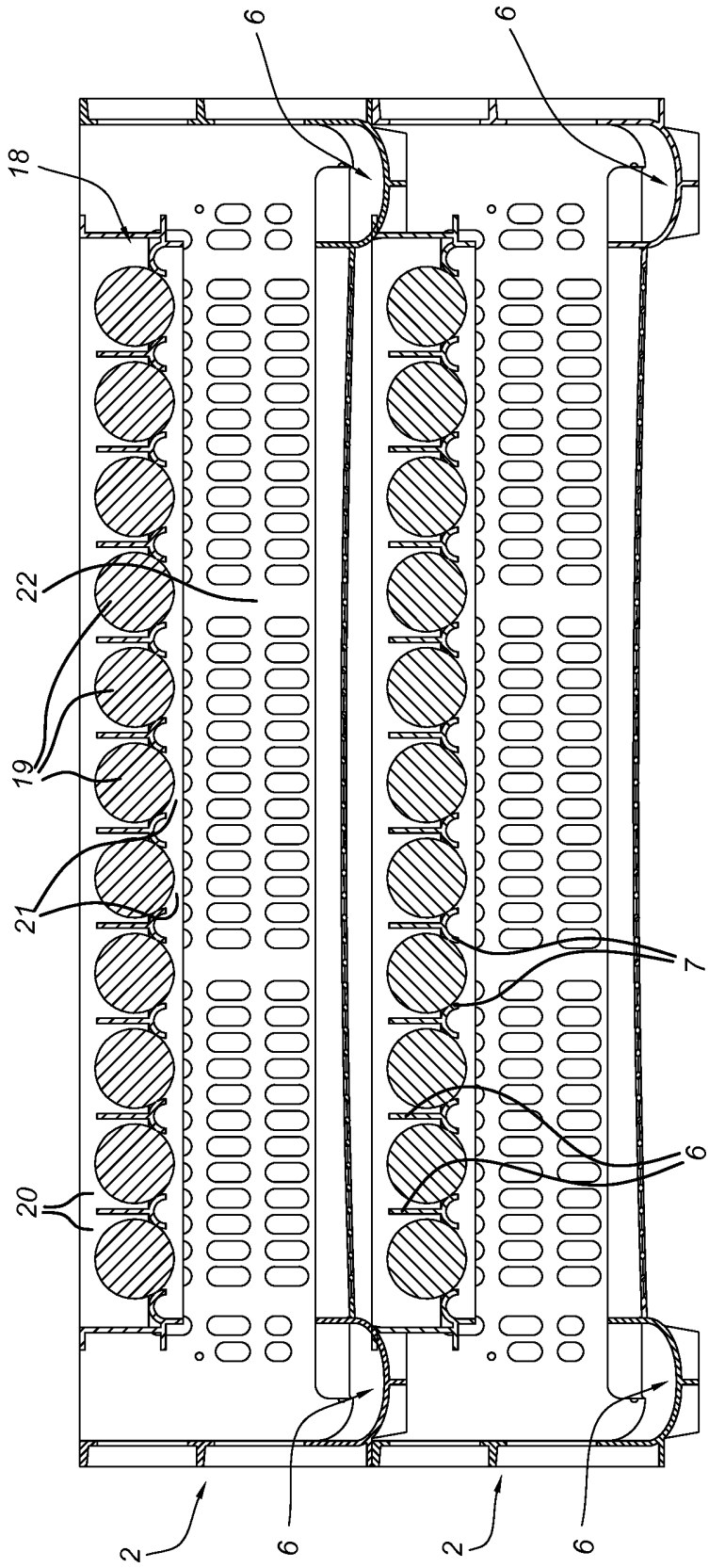

Fig. 7

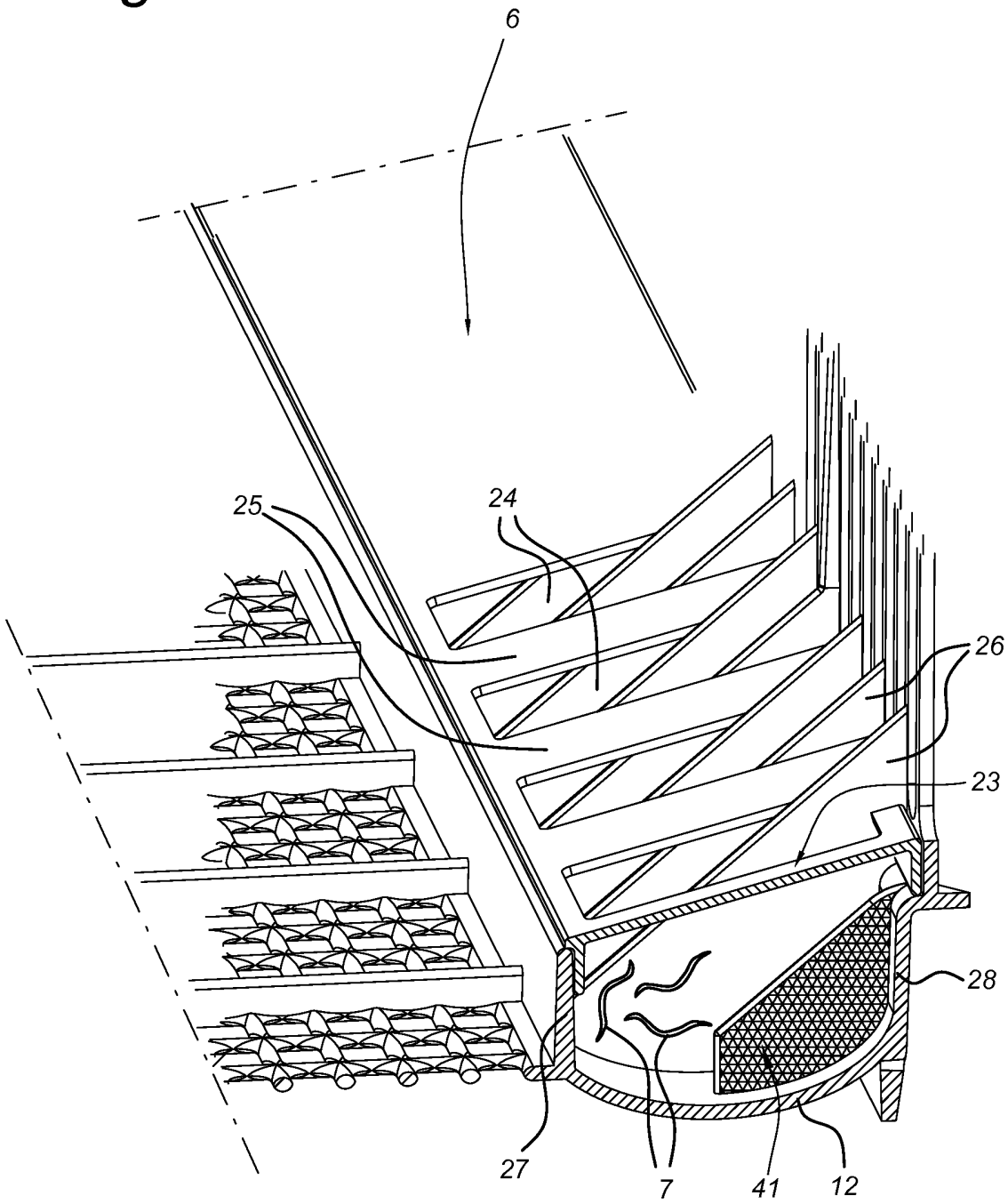

Fig. 8

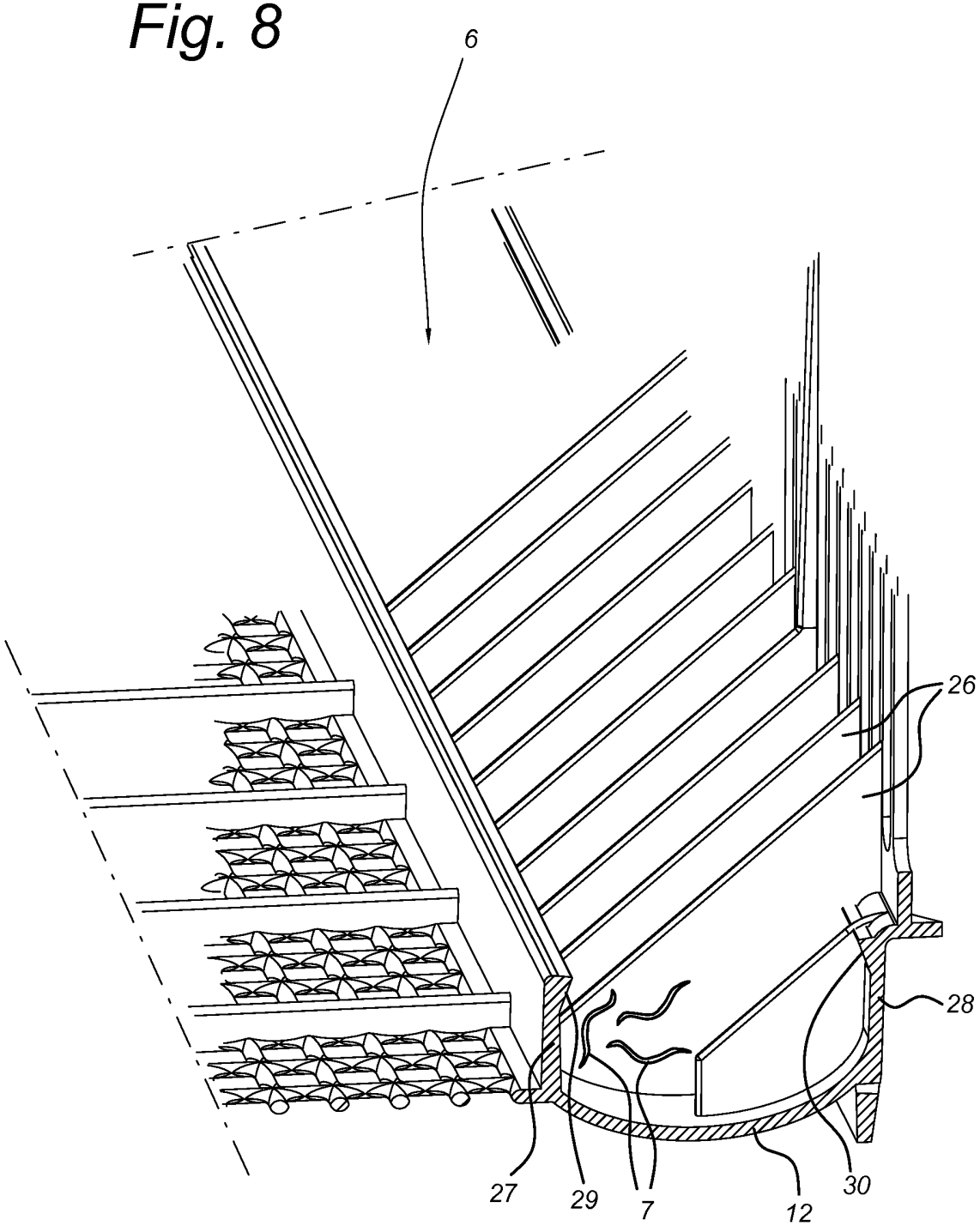

Fig. 9

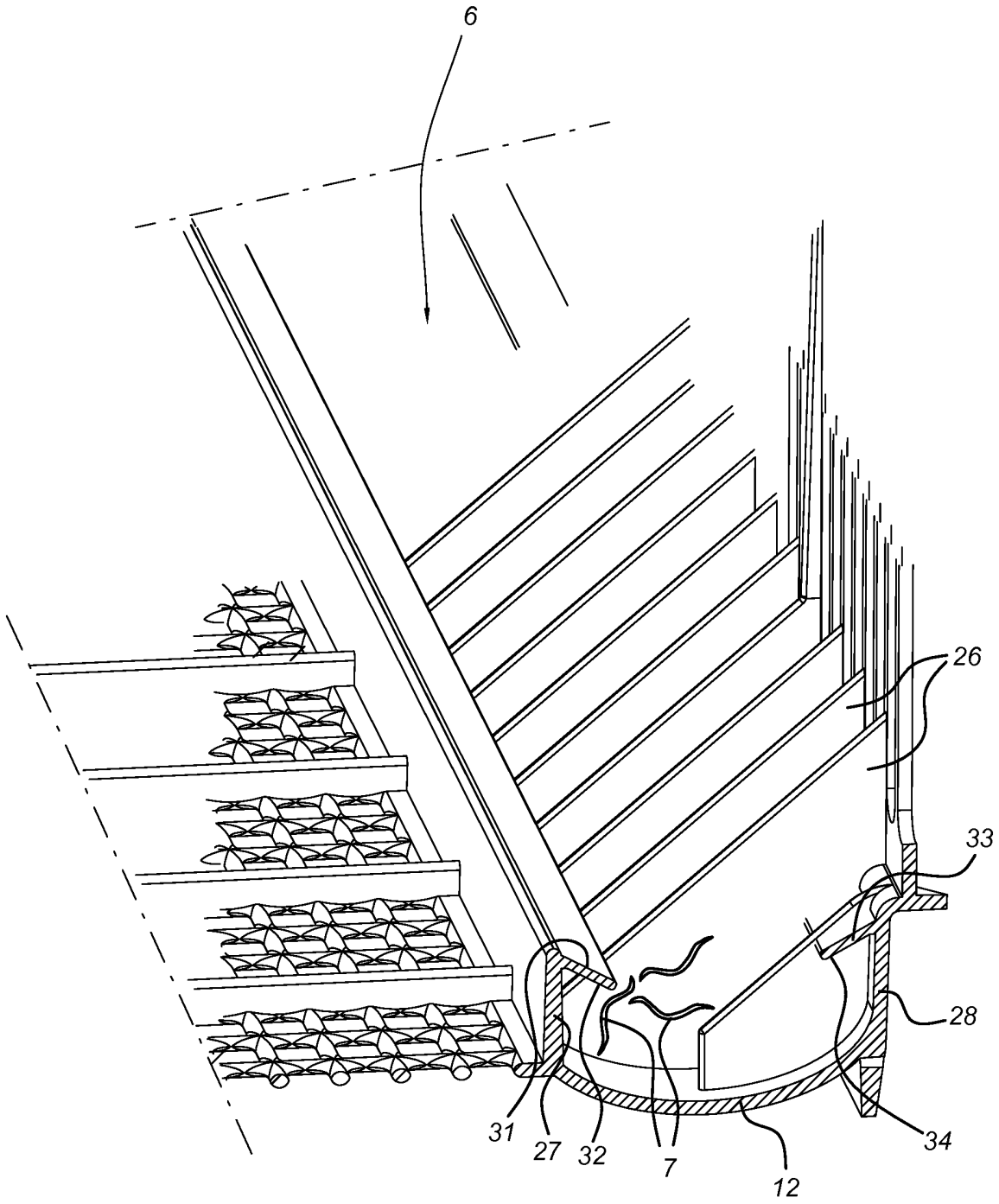

Fig. 10

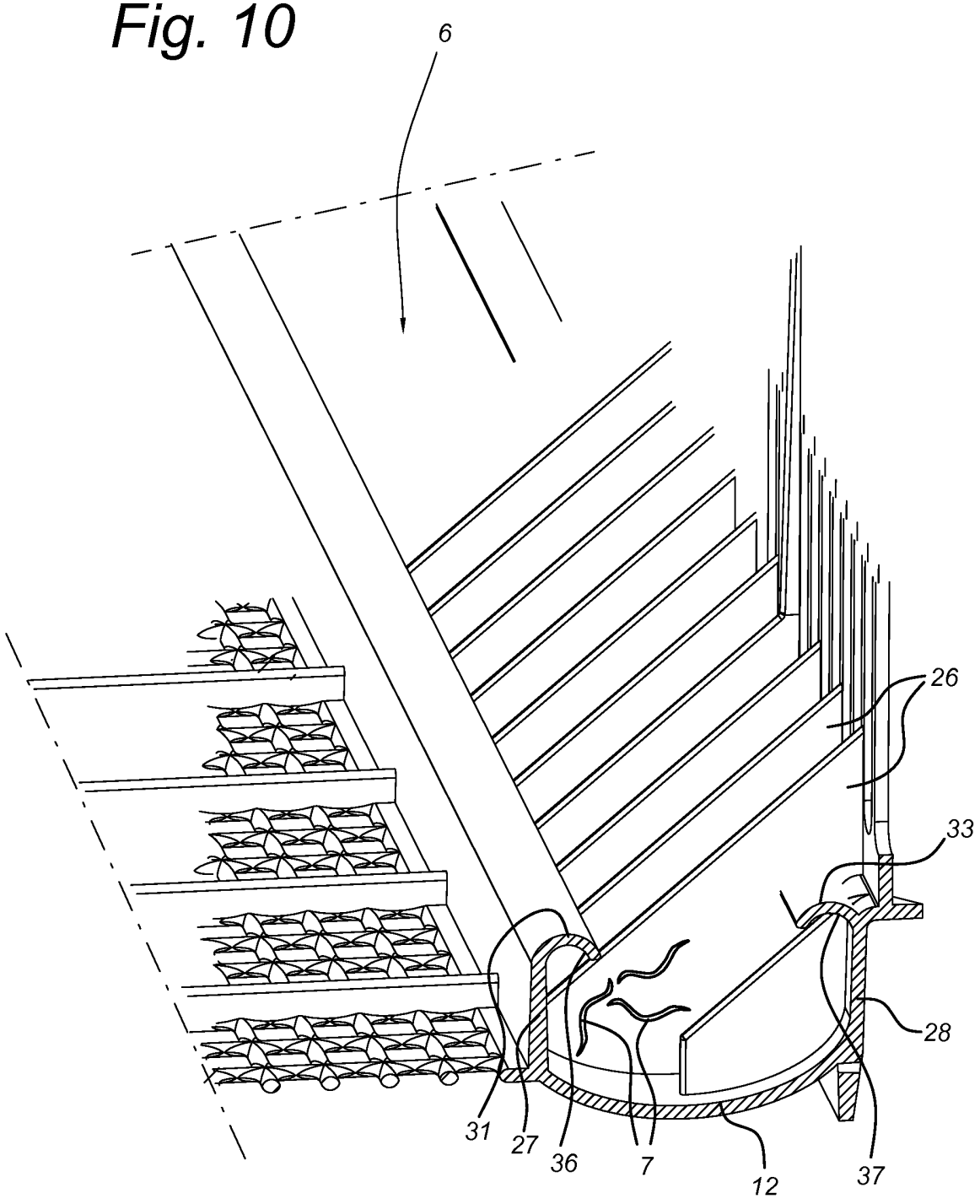

Abstract

The invention relates to a method of feeding hatched chicks in a climate chamber during a first stage of life from hatching, the method comprising;

a) controlling the temperature and humidity in the climate chamber,

b) operating a ventilation means to generate an air flow through the climate chamber, and

c) supplying the newly hatched chicks with live feed in the climate chamber.

SAMENWERKINGSVERDRAG (PCT)

RAPPORT BETREFFENDE NIEUWHEIDSONDERZOEK VAN INTERNATIONAAL TYPE

IDENTIFICATIE VAN DE NATIONALE AANVRAGE	KENMERK VAN DE AANVRAGER OF VAN DE GEMACHTIGDE
	P6058006NL
Nederlands aanvraag nr. **2016135**	Indieningsdatum **21-01-2016**
	Ingeroepen voorrangsdatum
Aanvrager (Naam) **HatchTech Group B.V.**	
Datum van het verzoek voor een onderzoek van internationaal type **16-04-2016**	Door de Instantie voor Internationaal Onderzoek aan het verzoek voor een onderzoek van internationaal type toegekend nr. **SN66153**

I. CLASSIFICATIE VAN HET ONDERWERP (bij toepassing van verschillende classificaties, alle classificatiesymbolen opgeven)

Volgens de internationale classificatie (IPC)

A01K31/00;A01K31/18;A01K39/014;A01K41/00;A01K45/00

II. ONDERZOCHTE GEBIEDEN VAN DE TECHNIEK

Onderzochte minimumdocumentatie

Classificatiesysteem	Classificatiesymbolen
IPC	**A01K;A23K**

Onderzochte andere documentatie dan de minimum documentatie, voor zover dergelijke documenten in de onderzochte gebieden zijn opgenomen

III.	☐	GEEN ONDERZOEK MOGELIJK VOOR BEPAALDE CONCLUSIES	(opmerkingen op aanvullingsblad)
IV.	☐	GEBREK AAN EENHEID VAN UITVINDING	(opmerkingen op aanvullingsblad)

ONDERZOEKSRAPPORT BETREFFENDE HET RESULTAAT VAN HET ONDERZOEK NAAR DE STAND VAN DE TECHNIEK VAN HET INTERNATIONALE TYPE

Nummer van het verzoek om een onderzoek naar de stand van de techniek
NL 2016135

A. CLASSIFICATIE VAN HET ONDERWERP
INV. A01K31/00 A01K31/18 A01K39/014 A01K41/00 A01K45/00
ADD.

Volgens de Internationale Classificatie van octrooien (IPC) of zowel volgens de nationale classificatie als volgens de IPC.

B. ONDERZOCHTE GEBIEDEN VAN DE TECHNIEK

Onderzochte minimum documentatie (classificatie gevolgd door classificatiesymbolen)
A01K A23K

Onderzochte andere documentatie dan de minimum documentatie, voor dergelijke documenten, voor zover dergelijke documenten in de onderzochte gebieden zijn opgenomen

Tijdens het onderzoek geraadpleegde elektronische gegevensbestanden (naam van de gegevensbestanden en, waar uitvoerbaar, gebruikte trefwoorden)
EPO-Internal, WPI Data

C. VAN BELANG GEACHTE DOCUMENTEN

Categorie *	Geciteerde documenten, eventueel met aanduiding van speciaal van belang zijnde passages	Van belang voor conclusie nr.
Y	WO 2011/133020 A1 (HATCHTECH GROUP BV [NL]; METER TJITZE [NL]) 27 oktober 2011 (2011-10-27) * samenvatting * * bladzijde 13, regel 27 - bladzijde 14, regel 6; figuren 1-8 *	1-22
Y	GB 2 489 994 A (DODSON & HORRELL LTD [GB]) 17 oktober 2012 (2012-10-17) * samenvatting * * bladzijden 2-9 *	1-22
A	EP 1 310 163 A1 (ITOCHU FEED MILLS CO LTD [JP]) 14 mei 2003 (2003-05-14) * alineas [0013], [0015] - [0041]; figuren 1-7 *	1-22

-/--

[X] Verdere documenten worden vermeld in het vervolg van vak C.

[X] Leden van dezelfde octrooifamilie zijn vermeld in een bijlage

* Speciale categorieën van aangehaalde documenten

"A" niet tot de categorie X of Y behorende literatuur die de stand van de techniek beschrijft

"D" in de octrooiaanvrage vermeld

"E" eerdere octrooi(aanvrage), gepubliceerd op of na de indieningsdatum, waarin dezelfde uitvinding wordt beschreven

"L" om andere redenen vermelde literatuur

"O" niet-schriftelijke stand van de techniek

"P" tussen de voorrangsdatum en de indieningsdatum gepubliceerde literatuur

"T" na de indieningsdatum of de voorrangsdatum gepubliceerde literatuur die niet bezwarend is voor de octrooiaanvrage, maar wordt vermeld ter verheldering van de theorie of het principe dat ten grondslag ligt aan de uitvinding

"X" de conclusie wordt als niet nieuw of niet inventief beschouwd ten opzichte van deze literatuur

"Y" de conclusie wordt als niet inventief beschouwd ten opzichte van de combinatie van deze literatuur met andere geciteerde literatuur van dezelfde categorie, waarbij de combinatie voor de vakman voor de hand liggend wordt geacht

"&" lid van dezelfde octrooifamilie of overeenkomstige octrooipublicatie

Datum waarop het onderzoek naar de stand van de techniek van internationaal type werd voltooid	Verzenddatum van het rapport van het onderzoek naar de stand van de techniek van internationaal type
30 augustus 2016	

Naam en adres van de instantie	De bevoegde ambtenaar
European Patent Office, P.B. 5818 Patentlaan 2 NL - 2280 HV Rijswijk Tel. (+31-70) 340-2040, Fax: (+31-70) 340-3016	von Arx, Vik

1

ONDERZOEKSRAPPORT BETREFFENDE HET RESULTAAT VAN HET ONDERZOEK NAAR DE STAND VAN DE TECHNIEK VAN HET INTERNATIONALE TYPE

Nummer van het verzoek om een onderzoek naar de stand van de techniek
NL 2016135

C. (Vervolg). VAN BELANG GEACHTE DOCUMENTEN

Categorie *	Geciteerde documenten, eventueel met aanduiding van speciaal van belang zijnde passages	Van belang voor conclusie nr.
A	US 3 396 703 A (TRUSSELL HARRY B) 13 augustus 1968 (1968-08-13) * het gehele document *	1-22
A	WO 02/34039 A1 (KUIJPERS CORNELIUS JOHANNES MA [NL]; KUIJPERS PAULUS HENDRIK MARIA [NL]) 2 mei 2002 (2002-05-02) * samenvatting * * bladzijde 12, regel 3 - bladzijde 13, regel 9; figuren 1-4 *	1-22

1

ONDERZOEKSRAPPORT BETREFFENDE HET RESULTAAT VAN HET ONDERZOEK NAAR DE STAND VAN DE TECHNIEK VAN HET INTERNATIONALE TYPE

Informatie over leden van dezelfde octrooifamilie

Nummer van het verzoek om een onderzoek naar de stand van de techniek: NL 2016135

In het rapport genoemd octrooigeschrift	Datum van publicatie	Overeenkomend(e) geschrift(en)	Datum van publicatie
WO 2011133020 A1	27-10-2011	AU 2010351630 A1	08-11-2012
		BR 112012026828 A2	12-07-2016
		CN 102946720 A	27-02-2013
		EP 2560480 A1	27-02-2013
		RU 2012149237 A	27-05-2014
		US 2013104809 A1	02-05-2013
		WO 2011133020 A1	27-10-2011
GB 2489994 A	17-10-2012	GEEN	
EP 1310163 A1	14-05-2003	CA 2418449 A1	05-02-2003
		EP 1310163 A1	14-05-2003
		ES 2355955 T3	01-04-2011
		JP 4791622 B2	12-10-2011
		JP 2002051663 A	19-02-2002
		US 2004035368 A1	26-02-2004
		WO 0215679 A1	28-02-2002
US 3396703 A	13-08-1968	GEEN	
WO 0234039 A1	02-05-2002	AT 328475 T	15-06-2006
		AU 1440502 A	06-05-2002
		DE 60120510 T2	23-11-2006
		EP 1414291 A1	06-05-2004
		ES 2260304 T3	01-11-2006
		NL 1016479 C2	01-05-2002
		WO 0234039 A1	02-05-2002

WRITTEN OPINION

File No.	Filing date *(day/month/year)*	Priority date *(day/month/year)*	Application No.
SN66153	21.01.2016		NL2016135

International Patent Classification (IPC)
INV. A01K31/00 A01K31/18 A01K39/014 A01K41/00 A01K45/00

Applicant
HatchTech Group B.V.

This opinion contains indications relating to the following items:

- ☒ Box No. I Basis of the opinion
- ☐ Box No. II Priority
- ☐ Box No. III Non-establishment of opinion with regard to novelty, inventive step and industrial applicability
- ☐ Box No. IV Lack of unity of invention
- ☒ Box No. V Reasoned statement with regard to novelty, inventive step or industrial applicability; citations and explanations supporting such statement
- ☐ Box No. VI Certain documents cited
- ☒ Box No. VII Certain defects in the application
- ☒ Box No. VIII Certain observations on the application

Examiner
von Arx, Vik

Application number

WRITTEN OPINION

NL2016135

Box No. I Basis of this opinion

1. This opinion has been established on the basis of the latest set of claims filed before the start of the search.

2. With regard to any **nucleotide and/or amino acid sequence** disclosed in the application and necessary to the claimed invention, this opinion has been established on the basis of:

   a. type of material:

   ☐ a sequence listing

   ☐ table(s) related to the sequence listing

   b. format of material:

   ☐ on paper

   ☐ in electronic form

   c. time of filing/furnishing:

   ☐ contained in the application as filed.

   ☐ filed together with the application in electronic form.

   ☐ furnished subsequently for the purposes of search.

3. ☐ In addition, in the case that more than one version or copy of a sequence listing and/or table relating thereto has been filed or furnished, the required statements that the information in the subsequent or additional copies is identical to that in the application as filed or does not go beyond the application as filed, as appropriate, were furnished.

4. Additional comments:

Box No. V Reasoned statement with regard to novelty, inventive step or industrial applicability; citations and explanations supporting such statement

1. Statement

Novelty	Yes:	Claims	1-22
	No:	Claims	
Inventive step	Yes:	Claims	
	No:	Claims	1-22
Industrial applicability	Yes:	Claims	1-22
	No:	Claims	

2. Citations and explanations

see separate sheet

Application number

WRITTEN OPINION

NL2016135

Box No. VII Certain defects in the application

see separate sheet

Box No. VIII Certain observations on the application

see separate sheet

Re Item V

Reasoned statement with regard to novelty, inventive step or industrial applicability; citations and explanations supporting such statement

Reference is made to the following documents:

D1: WO 2011/133020 A1 (HATCHTECH GROUP BV [NL]; METER TJITZE [NL]) 27 oktober 2011 (2011-10-27)

D2: GB 2 489 994 A (DODSON & HORRELL LTD [GB]) 17 oktober 2012 (2012-10-17)

D3: EP 1 310 163 A1 (ITOCHU FEED MILLS CO LTD [JP]) 14 mei 2003 (2003-05-14)

D4: US 3 396 703 A (TRUSSELL HARRY B) 13 augustus 1968 (1968-08-13)

The present application does not meet the criteria of patentability, because the subject-matter of claim 1 does not involve an inventive step:

Document D1 discloses, see the whole document and in particular the passages cited in the search report, the reference signs applying to this document:
A climate chamber in which a method of feeding hatched chicks during a first stage of life from hatching is executed, the method comprising:
a) controlling the temperature and humidity in the climate chamber,
b) operating a ventilation means to generate an air flow through the climate chamber, and
c) supplying the newly hatched chicks with feed in the climate chamber.

The subject-matter of claim 1 therefore differs from this known method in that the chicks are supplied with live feed and is therefore new.

The problem to be solved by the present invention may therefore be regarded as to provide a more natural start for young chicks.

The solution proposed in claim 1 of the present application cannot be considered as involving an inventive step for the following reasons:
It is already well known to feed smaller sized grains and seeds, e.g. sorghum, millet...., to day-old chicks. Normally these grains and seeds have germinative power, i.e. they are "live" seeds or grains. For this reason alone the subject matter at least lacks an inventive step.

Furthermore, feeding insects or other living matter to chickens is also already known, see document D2, see the whole document and in particular the passages cited in the search report.

To feed such "live" feed to the day-old chicks in the crates of the D1 system is therefore also obvious. The subject matter of claim 1 therefore does not involve an inventive step in view of D1 and D2 either.

The present application does not meet the criteria of patentability, because the subject-matter of claim 19 does not involve an inventive step:

As ascertained in the above, document D1 discloses a climate chamber for brooding and breeding hatchlings. The crates of D1 have watering and feeding facilities, i.e. troughs or trays 60.

The subject-matter of claim 1 therefore differs from this known climate chamber in that the troughs have means for maintaining live feed therein and is therefore new.

The problem to be solved by the present invention may therefore be regarded as to provide a more natural start for young chicks by feeding and maintaining live feed in the troughs of the known climate chamber.

The solution proposed in claim 1 of the present application cannot be considered as involving an inventive step for the following reasons:

Document D2 discloses a kit for adhesively attaching a layer (i.e. an edible enclosure surrounding the feed) of "living feed" like grains, seeds and insects to the surface of a feeding trough for chickens.
The application of such a kit to a feeding trough known from D1 is thus obvious and deprives the subject matter of independent claim of an inventive step.

Dependent claims 2 to 15, 17, 18 and 20 to 22 do not contain any features which, in combination with the features of any claim to which refer, meet the requirements of inventive step because the obvious combination of document D1 and D2 further embraces also the subject matter of dependent claims 2 to 15, 17, 18 and 20 to 22.

The combination of the features of dependent claim 16 would appear to be neither known from, nor rendered obvious by, the available prior art.
However, when considering that grains or seeds which are capable of germination are in fact "live feed", also the subject matter of dependent claim 16 at least lacks an inventive step.

The attention of the applicant is also drawn to document D3, see the whole document and in particular the passages, especially paragraph [0013], cited in the search report which discloses the administration of a probiotic composition in the form of a "live

microbial feed" supplement to chicks as soon as possible after hatching.
It is considered that the method and feeding apparatus of D3 applied in the climate chamber of D1 also deprives at least independent claims 1 and 19 of an inventive activity.

Re Item VII

Certain defects in the application

The features of the claims are not provided with reference signs placed in parentheses.

The relevant background art disclosed in documents D1 to D4 is not mentioned in the description, nor are these documents identified therein.

Re Item VIII

Certain observations on the application

As already indicated in the above (grains or seeds which are capable of germination are in fact "live feed"), the term "*levend voer* (*live feed)*" used in the claims has no well-recognized meaning and leaves the reader in doubt as to the meaning of the technical features to which it refers, thereby rendering the definition of the subject-matter of said claims unclear.
See also document D3 which specifies its probiotic composition to be a "live microbial feed" supplement administered to chicks as soon as possible after hatching.