Jan. 1, 1929. 1,697,521

T. COLLINS

PLASTER BOARD STUD AND KEY LOCK

Filed Dec. 15, 1927

Fig. 1.

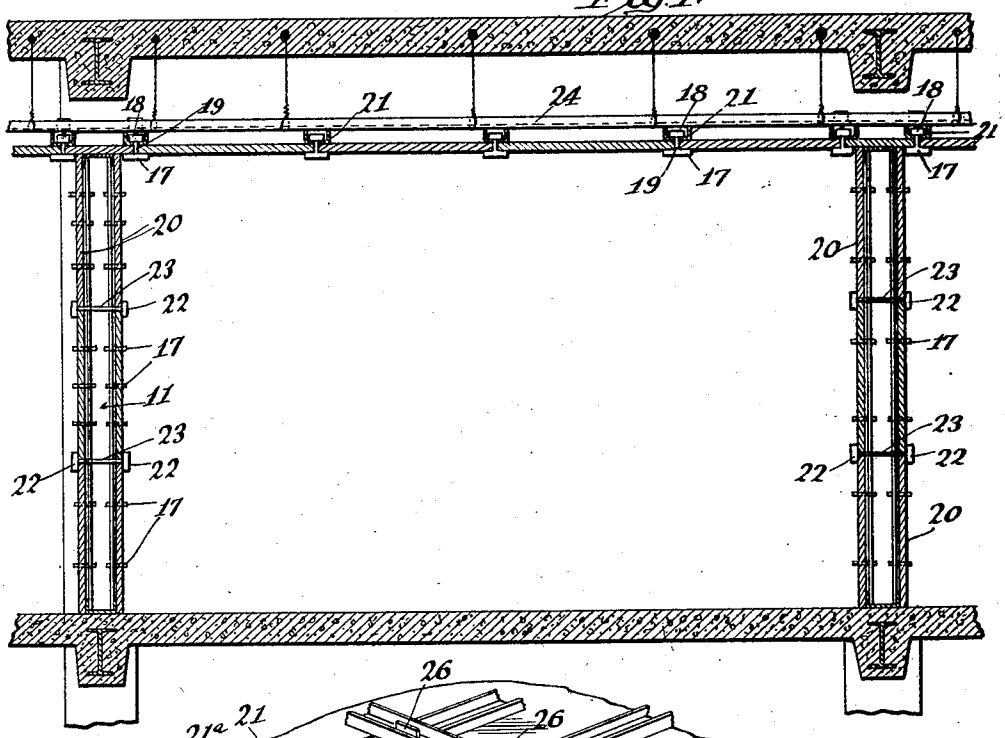

Fig. 2.

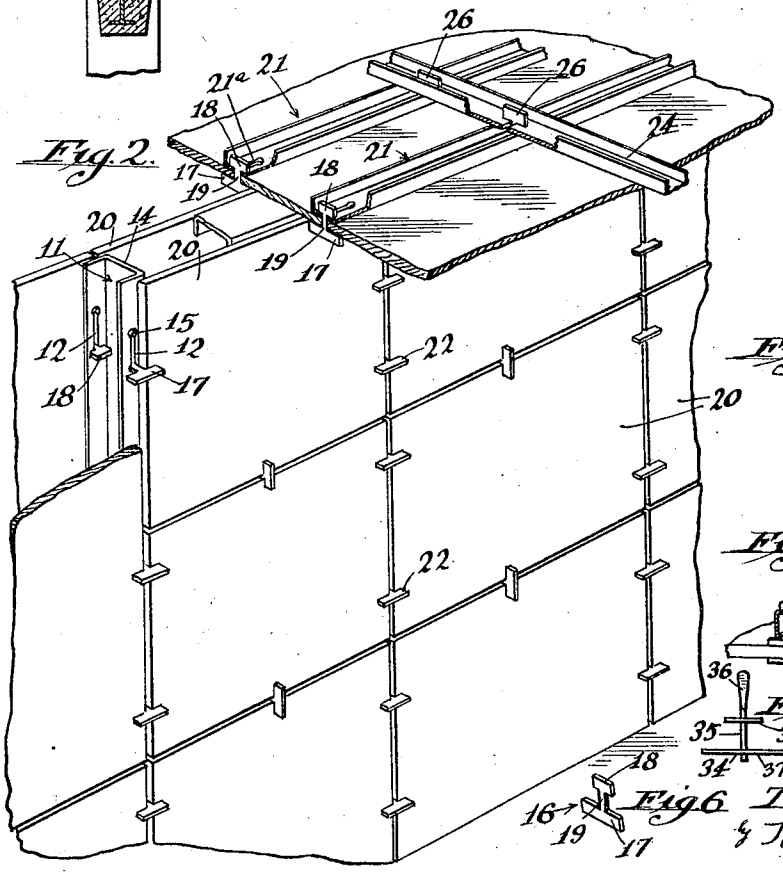

Fig. 3.

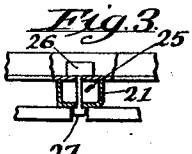

Fig. 4.

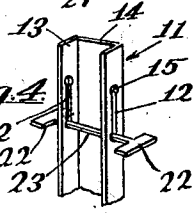

Fig. 5.

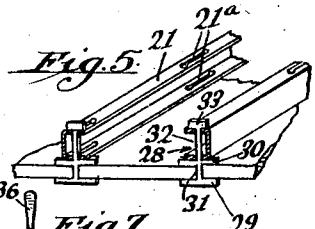

Fig. 7.

Fig. 6.

Inventor
Timothy Collins.
by Hazard and Miller
Attorneys.

Patented Jan. 1, 1929. 1,697,521

UNITED STATES PATENT OFFICE.

TIMOTHY COLLINS, OF LOS ANGELES, CALIFORNIA.

PLASTER-BOARD STUD AND KEY LOCK.

Application filed December 15, 1927. Serial No. 240,176.

My invention is in a plaster board stud and key lock and in the method of constructing partitions and ceilings using such lock.

An object of my invention is the construction of a key type of locking device which may be utilized to attach plaster board to metal studding, or to metal ceiling bars, whereby the key may engage the edges of two plaster boards and hold them in position, the ends of the key being embedded in the plaster subsequently coated on the plaster board. With my construction, if desired, slots can be made through the plaster board so that these may be held in position, the lock engaging the board at positions other than the edges.

In my type of lock the studding or ceiling irons preferably have slots cut therethrough, and these slots allow passing therethrough of H shaped pieces having at least two flanges with a connecting web. Such pieces may be passed through the slot and then turned at right angles thereto so that one of the flanges engages the stud or the ceiling iron and the other the plaster board. In this construction for a double wall partition the keys may pass completely through the studs from side to side or they can be utilized to engage a flange of the stud and the edges of the board.

My invention will be more readily understood from the following description and drawings, in which:

Figure 1 is a section through partitions of the ceiling constructed in accordance with my invention.

Fig. 2 is a perspective view partly broken away showing part of a double partition and part of a ceiling.

Fig. 3 is a detail cross section of one form of ceiling construction.

Fig. 4 is a perspective view of a form of stud construction with a double key.

Fig. 5 is a perspective view of the ceiling construction with the key having upper and lower locking flanges.

Fig. 6 is a perspective view of a key formed of flat metal.

Fig. 7 is a side view of a key made by spot welding.

In one form of my invention the studs, designated generally by the numeral 11, have slots 12 cut through the flanges 13, the webs 14 being left intact. For using a flat type of key, each of the slots should have a rounded section 15 which may be formed by a drill. This rounded section is preferably at the lower part of the slot.

In one form of key, designated by the numeral 16, this is shown with a long flange 17 and a short flange 18 connected by a web 19, such a key being cut out of sheet metal; this forms in effect an H shaped structure. Such a key is passed through the slot 12 on edge and then turned at right angles so that the long flange engages the outside of a sheet of plaster board indicated at 20 and the inner flange 18 engages one of the flanges of the channel. It will therefore be seen that the long flange 17 may secure two plaster boards in position at the adjoining edge. This type of key is illustrated in connection with the lower ceiling channels 21 which are illustrated as having a slot 21^a in the web of these channels, and thus the key engaging the face of the plaster board and the bottom of the web of the channel holds adjacent plaster boards to the ceiling.

A longer type of key is illustrated in Fig. 4 and in this case the flanges 22 are made substantially the same size and the web 23 sufficiently long to extend through the two flanges of a stud for partition construction, or to pass through a cross channel 24 and the longitudinal channel 21 of the ceiling construction. When this type is used on partitions it extends from one face to the other having the flanges on the outside faces.

In Fig. 3 I illustrate a type of key designated by the numeral 25 which has a large flange 26 and a small flange 27, the large flange being designed to engage in the channel 24 of the ceiling structure and lock the lower channel 21 thereto. The lower head 27 is made small as it fits between the edges of the plaster board.

In the construction of the key shown in Fig. 5 and which is designated by the numeral 28, this has two parallel flanges 29 and 30 with a short web 31 between, and then a long web 32 connects to the turning flange 33. This type of key is preferably used where it is desired to have the flanges 29 and 30 grip opposite sides of a plaster board, and the key may be fastened to the supporting metal structure in the manner as described in connection with the simple key of Fig. 6.

In Fig. 7 I show a key designated by the numeral 34 which has a stem 35 formed of round metal stock with a flat upper end 36 and on this stem there are a pair of round

cross pieces 37 and 38 preferably secured thereto by spot welding; and if desired, one of these cross pieces may be longer than the other. This type of key is secured to the plaster board and to a supporting iron structure in the same manner as the keys cut from flat metal, the flattened part 36 giving a gripping device for turning the key.

Various changes may be made in the principles of my invention without departing from the spirit thereof, as set forth in the description, drawings and claims.

I claim:

1. In the art described, the combination of a building structure having a slot therethrough, sheets of plaster board, a key having a pair of flanges engaging on opposite sides of the plaster boards and having a short web extending between the joints and with an additional web passing through the said structure with a flange on the end of the additional web.

2. A plaster board lock comprising a metal stem having a flat end and with a plurality of cross pieces secured to the stem and extending in opposite directions therefrom, the cross pieces being adapted to engage part of a building structure and a sheet of plaster board, and the flattened end being adapted to rotate said key.

In testimony whereof I have signed my name to this specification.

TIMOTHY COLLINS.