Oct. 9, 1962 R. P. ROHDE 3,057,304

VANE PUMP

Filed Feb. 3, 1960 2 Sheets-Sheet 1

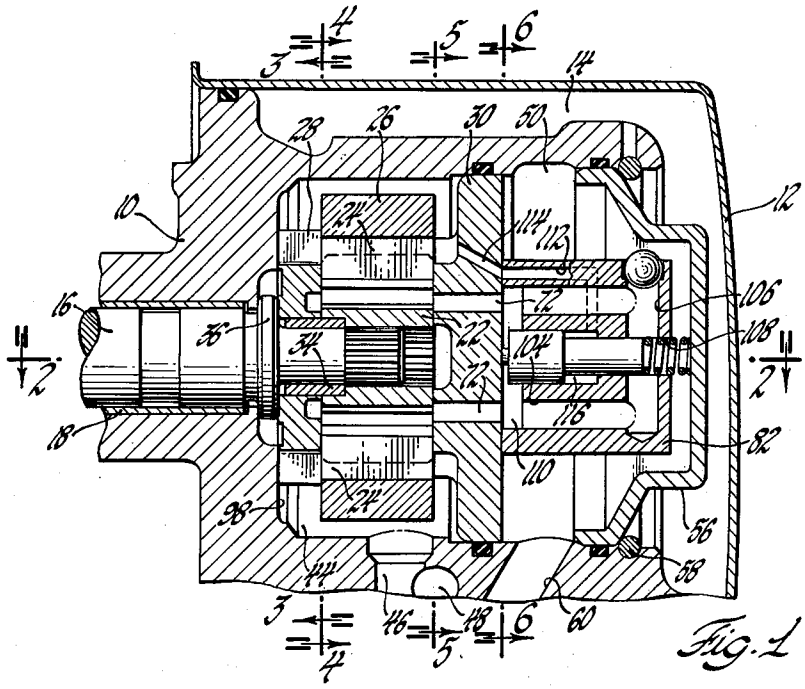

Fig. 1

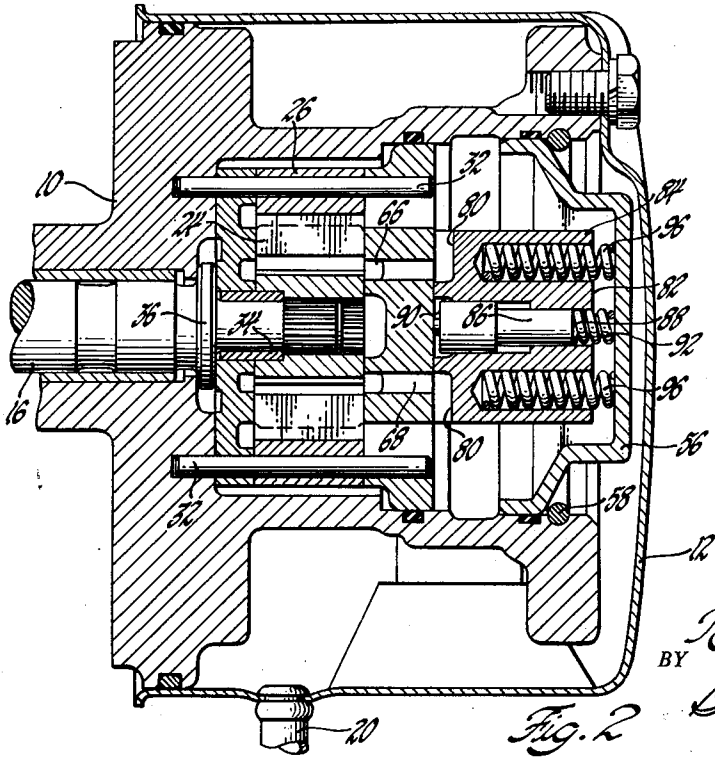

Fig. 2

INVENTOR.
Robert P. Rohde
BY
Bruce Beecher
ATTORNEY

Oct. 9, 1962 R. P. ROHDE 3,057,304

VANE PUMP

Filed Feb. 3, 1960 2 Sheets-Sheet 2

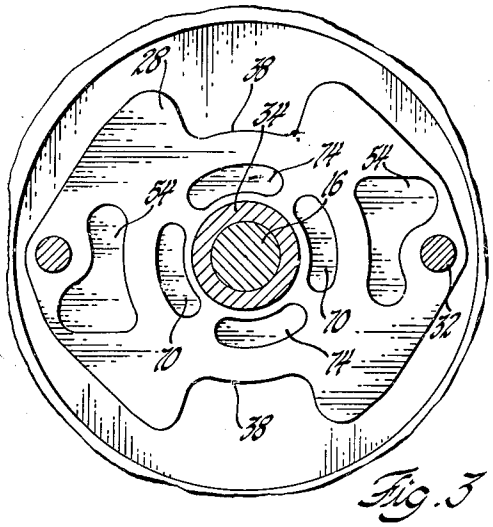

Fig. 3

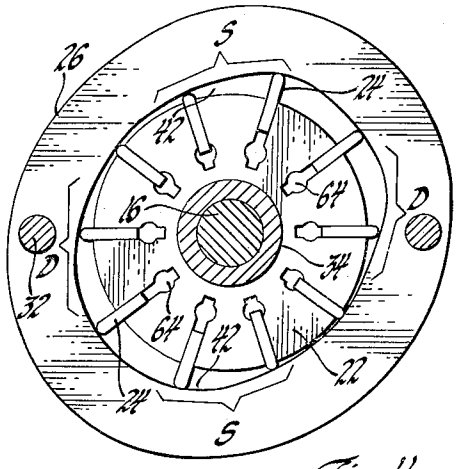

Fig. 4

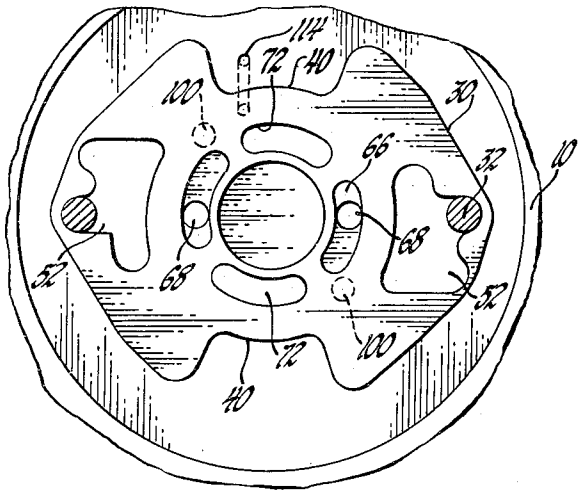

Fig. 5

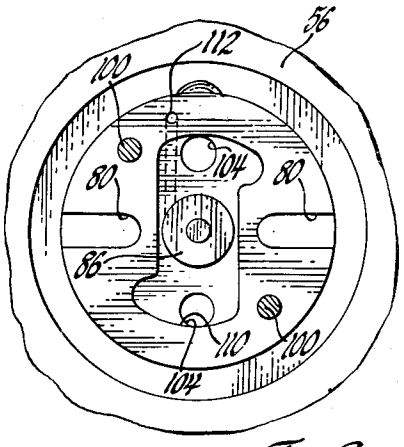

Fig. 6

INVENTOR.
Robert P. Rohde
BY
Bryce Beeches
ATTORNEY

United States Patent Office 3,057,304 Patented Oct. 9, 1962

3,057,304

VANE PUMP

Robert P. Rohde, Saginaw, Mich., assignor to General Motors Corporation, Detroit, Mich., a corporation of Delaware

Filed Feb. 3, 1960, Ser. No. 6,513
3 Claims. (Cl. 103—136)

This invention relates to rotary pumps and more particularly pertains to an improvement in vane pumps.

In such pumps, it is manifestly essential that the tips of the vanes be maintained in intimate contact with the inner periphery of the encircling cam ring whereby the vanes are caused to reciprocate to vary the volume of the intervane chambers, as required for the pumping action. Although springs have long been used to load the vanes radially outwardly to ensure this intimate contact, it is now more common to achieve the same result by directing pressure fluid derived from the pump discharge chamber into the base of the slots in the pump rotor in which the vanes reciprocate. This method, however, has not proven completely satisfactory becaudse of undue wearing of the vane tips occurring in the suction area, i.e., as the vanes move radially outwardly to draw fluid into the intervane chambers. This undue wearing, which also reflects undesirable friction in the indicated areas, owes to the fact that in the suction areas the pressure of the fluid working against the rounded tips of the vanes is negative, presenting no resistance to the pressure urging the vanes radially outwardly.

The present invention aims to provide a scheme for correcting the condition just described.

Other objects and features of the invention will be apparent from the following description of a preferred embodiment thereof. The description will proceed with reference to the accompanying drawings wherein:

FIGURE 1 is a longitudinal view of a pump assembly, certain parts being shown in section, others in elevation;

FIGURE 2 is a section on the line 2—2 in FIGURE 1; and

FIGURES 3–6, inclusive, are views on the correspondingly numbered lines in FIGURE 1.

Referring first to the FIGURES 1 and 2, the numeral 10 denotes the pump housing which is partially surrounded by a sheet metal envelope 12 providing a reservoir space 14. Fluid is returned to this reservoir space from the system served by the pump through a return line 20 (FIGURE 2).

The pump drive shaft 16 turns in bushing 18 and is splined to a rotor 22 carrying vanes 24. The latter are surrounded by a cam ring 26 disposed between a thrust plate 28 and a pressure plate 30, and formed (FIGURE 4) to induce the required reciprocation of the vanes as the vanes as the rotor turns. The two plates 28 and 30 and the cam ring are held against relative angular displacement about their common axis by dowel pins 32.

A sleeve 34 surrounding the drive shaft 16 inwardly of the annular rib 36, whereby the drive shaft is located axially, is press-fitted into the rotor 22 and has a close bearing fit with relation to the thrust plate 28. This sleeve allows the rotor to partake of the angular alignment provided by the dowel pins 32 and corrects for misalignment of the drive shaft.

Plates 28 and 30 (see FIGS. 3 and 5) are formed with re-entrant portions 38 and 40, respectively, extending inwardly of the inner periphery of the cam ring 26 so as to provide intake ports communicating the intervane chambers 42 (FIGURE 4) with the annular intake chamber 44. Fluid enters the intake chamber 44 via a passage 46 with which connects a passage 48 open to the reservoir space 14. A bypass valve, not shown, operates to divert discharge fluid not required by the system served

by the pump into the passage 46, the diverted fluid being derived from a passage 60 (FIGURE 1). For a description of such valve and its operation, reference is made to copending application Serial No. 762,162, filed September 19, 1958 in the names of the applicant herein and two others.

Fluid is discharged from the intervane chambers 42 into a pressure cavity or chamber 50 via openings 52 in the pressure plate 30. These openings register with pockets 54 in thrust plate 28, the pockets 54 being provided in the interest of achieving a pressure balance. The pressure cavity 50 will be noted as formed by the pump housing in combination with the pressure plate 30 and a cover member 56 secured to the housing by a snap ring 58.

As the vanes 24 are carried clockwise (FIGURE 4) by the rotor 22, they pass through two opposed intake or suction areas S and two opposed areas of discharge D. These intake and discharge areas respectively correspond to the intake ports provided by the re-entrant portions 38, 40 (FIGURES 3 and 5) and the discharge ports represented by the openings 52.

From FIGURE 4 it will be observed that each of the slots in the rotor in which the vanes 24 reciprocate terminates at its inner end in a pocket 64. These pockets 64, as the vanes are carried through the discharge areas D, are brought into registry with arcuate pockets 66 in pressure plate 30. The latter pockets are open to the pressure chamber 50 via holes 68. Thus, in the discharge areas the tips of the vanes are maintained tightly against the cam ring by the pressure of the fluid charged to the pockets 64 through the holes 68. For balance, and for proper distribution of this pressure fluid, thrust plate 28 has therein pockets 70 communicating with the pockets 66 via the pockets 64 which extend the width of the rotor.

To provide for pressure loading of the vanes as the same are carried through the suction areas S, pressure plate 30 has therein arcuate openings 72 which are in registry with the pockets 64 at such times. These arcuate openings 72, as permitted by pockets 64, communicate with arcuate pockets 74 in thrust plate 28. As in the case of the pockets 70, the pockets 74 perform a balancing function and serve in the proper distribution of the pressure-loading fluid as the vanes course the suction areas.

Reverting now to the holes 68 in the pressure plate 30, which holes serve in the conveyance of pressure fluid to the pockets 66 and the communicating pockets 70 in the thrust plate 28, it will be observed that such holes open to slots 80 (FIGURES 2 and 6) in the housing component 82 of a valve assembly 84 and that these slots 80 are open to the pressure chamber 50.

The purpose of the valve assembly 84 is to limit the pressure in the rotor pockets 64 as the same pass through the suction areas to a value preventing the undue wearing of the vane tips mentioned in the forepart hereof. To this end, the assembly 84 comprises a plunger element 86 having a reaction surface 88 subject to the pressure of the fluid in the chamber 50 and a reaction surface 90 of larger area subject to the pressure of the fluid in the rotor pockets 64 as they course the suction areas. A spring 92 biasing plunger 86 toward the pressure plate 30 is used for a reason later explained. Springs 96 accommodated in elongated recesses formed in the valve housing 82 react against the cover member 56 to urge the pressure plate 30, cam ring 26 and thrust plate 28 in the direction toward the wall 98 of the pump housing 10. In this way, the plates 30 and 28 are maintained in substantially sealing engagement with the cam ring and rotor. Dowel pins 100, seen in FIGURES 5 and 6, prevent angular displacement of the valve housing 82 relative to the plates 28 and 30 and the cam ring 26.

With the valve 84 constructed as shown, it should be apparent that any pressure fluid entering the holes or passages 72, which serve the rotor pockets 64 as these pass through the suction areas S, must be derived from a cavity 110. Passages 104 opening to this cavity communicate with a common passage 106 which, in the shown position of the spool 86, is open to the pressure chamber 50 via the opening 108.

A passage 112 in the valve housing 82 communicates with a passage 114 in the pressure plate 30 to allow fluid which tends to accumulate in the space 116 to pass into the intake chamber 44.

The pressure limiting effect of the plunger 86 with respect to the rotor pockets 64, when these are in registry with pockets 72 of the pressure plate, is a function of the differential areas 88 and 90 and the pressures in cavities 50 and 110. Thus, ignoring for the moment the effect of spring 108, the position of the plunger at any time is set by the equation:

$$P_{110}A_{90}=P_{50}A_{88}$$

where P_{110} is the pressure in cavity 110; A_{90} the area of the surface 90; P_{50} the pressure in cavity 50; and A_{88} the area of the surface 88. Assuming, for example, that A_{90} is twice A_{88} (and still considering spring 108 as absent), it will be seen that pressure P_{110} will be exactly one-half of pressure P_{50}. Thus, the pressure of the fluid loading the vanes in the suction areas S becomes one-half the pressure of the fluid loading the vanes in the discharge areas D where the pressure in the pockets 64 must overcome the discharge pressure acting on the vane tips. It will be understood that by designing the plunger with a larger or smaller differential as between areas 88 and 90 substantially any desired proportioning of the pressures may be achieved.

Now as to spring 108, it is considered in a particular application contemplated for the pump that the fluid in the pockets 64 when the pump discharge pressure is low should be at the same pressure in the suction areas S as in the discharge areas D in order to maintain the necessary contact between the vane tips and the cam ring. Denoting the load of the spring 108 as L, the pressure balance equation for the plunger thus becomes:

$$P_{110}A_{90}=P_{50}A_{88}+L$$

From this equation it can be seen that P_{110} with the aid of the spring can be made equal to P_{50} until the discharge pressure attains the value with respect to which the spring is gaged.

What is claimed is:

1. In a pump provided with a pressure cavity and comprising a rotor mounting a plurality of radially extending elements caused on rotation of said rotor to reciprocate radially in slots in said rotor by cam means encircling said rotor and said elements, said elements in operation of the pump being carried by said rotor through a suction area wherein the chambers delineated by adjacent elements become filled with fluid and through a discharge area wherein fluid is discharged from said chambers into said pressure cavity, the combination of means providing passage means for charging pressure fluid from said cavity into said slots inward of said elements to pressure-load the latter as they are carried through said discharge area and separate passage means for charging pressure fluid from said cavity into said slots inward of said elements to pressure-load the same as they pass through said suction area, and valve means in said separate passage means operating to control the pressure of the fluid introduced into said slots from said separate passage means, said valve means having a reaction surface exposed to the pressure of fluid in said cavity and a reaction surface of greater area subject to the pressure of the fluid introduced into said slots through said separate passage means.

2. In a pump provided with a pressure plate and a cover plate disposed in spaced relation to form a pressure cavity and comprising a rotor mounting a plurality of radially extending elements caused on rotation of said rotor to reciprocate radially in slots in said rotor by cam means encircling said rotor and said elements, said cam means and said pressure plate standing in abutting face-to-face relation, said elements in operation of the pump being carried by said rotor through a suction area wherein the chambers delineated by adjacent elements become filled with fluid and through a discharge area wherein fluid is discharged from said chambers through passages in said pressure plate into said pressure cavity, the combination of a first part in said pressure plate for charging pressure fluid from said cavity into said slots inward of said elements to pressure-load the latter as they are carried through said discharge area, a second port for charging pressure fluid from said cavity into said slots inward of said elements to pressure-load the same as they are carried through said suction area, means providing a passage communicating said first port and said pressure cavity and a separate passage communicating said second port and said pressure cavity, and a valve member controlling the pressure of the fluid in said separate passage means, said valve member having a reaction surface exposed to the fluid in said pressure cavity and a second reaction surface subject to the pressure of the fluid entering said slots from said second port.

3. In a pump provided with a pressure plate and a cover plate disposed in spaced relation to form a pressure cavity and comprising a rotor mounting a plurality of radially extending elements caused on rotation of said rotor to reciprocate radially in slots in said rotor by cam means encircling said rotor and said elements, said cam means and said pressure plate standing in abutting face-to-face relation, said elements in operation of the pump being carried by said rotor through a suction area wherein the chambers delineated by adjacent elements become filled with fluid and through a discharge area wherein fluid is discharged from said chambers through passages in said pressure plate into said pressure cavity, the combination of a passage in said pressure plate for charging pressure fluid from said cavity into said slots inward of said elements to pressure-load the latter as they are carried through said discharge area, a separate passage in said pressure plate for charging fluid from said cavity into said slots inward of said elements to pressure-load the same as they pass through said suction area, and a valve assembly in said pressure cavity for controlling the pressure of the fluid passing through said separate passage, said assembly comprising a housing component and a plunger component having a reaction surface exposed to the fluid in said pressure cavity and a second reaction surface of larger area subject to the pressure of the fluid in said separate passage, said housing having spring means associated therewith reacting against said cover plate and urging said housing component into abutting face-to-face relation with said pressure plate, said plunger component also having spring means associated therewith urging said plunger component in the direction of said cover plate.

References Cited in the file of this patent

UNITED STATES PATENTS

2,255,785	Kendrick	Sept. 16, 1941
2,255,786	Kendrick	Sept. 16, 1941
2,319,238	Kendrick	May 18, 1943
2,631,540	Baugh, et al.	Mar. 17, 1953
2,653,550	Gardiner, et al.	Sept. 29, 1953
2,670,689	Ferris	Mar. 2, 1954
2,739,539	Gardiner	Mar. 27, 1956
2,910,944	Pettibone	Nov. 3, 1959