(12) PATENT APPLICATION PUBLICATION
(21) Application No.202041023084 A
(19) INDIA
(22) Date of filing of Application :02/06/2020
(43) Publication Date : 12/06/2020

(54) Title of the invention : BAND RING ASSEMBLY OF A PNEUMATIC VACUUM ELEVATOR AND METHOD TO OPERATE THE SAME

(51) International classification	:B66B 9/04	(71)**Name of Applicant :** **1)KILLAKATHU RAMANATHAN BABU** Address of Applicant :NO 11, LB ROAD, ADYAR, CHENNAI Tamil Nadu India
(31) Priority Document No	:NA	
(32) Priority Date	:NA	
(33) Name of priority country	:NA	(72)**Name of Inventor :** **1)KILLAKATHU RAMANATHAN BABU**
(86) International Application No	:NA	
Filing Date	:NA	
(87) International Publication No	: NA	
(61) Patent of Addition to Application Number	:NA	
Filing Date	:NA	
(62) Divisional to Application Number	:NA	
Filing Date	:NA	

(57) Abstract :
BAND RING ASSEMBLY OF A PNEUMATIC VACUUM ELEVATOR AND METHOD TO OPERATE THE SAME A band ring assembly of a pneumatic vacuum elevator is disclosed. The band ring assembly includes a band ring located at an external cylinder assembly. The band ring includes a first edge including a flat portion and at least two protrusions. The flat portion and the at least two protrusions are configured to accommodate an outer surface of at least two base rings. The band ring also includes a second edge opposite to the first edge. The second edge includes a base portion and at least two groove edges. The base portion and at least two groove edges are mechanically coupled to a band ring connector plate to lock the band ring around an elevator cabin of the pneumatic vacuum elevator. FIG. 1

No. of Pages : 18 No. of Claims : 10

Applicant: KILLAKATHU RAMANATHAN BABU

Total No. of sheets: 4
Sheet No.: 1 of 4

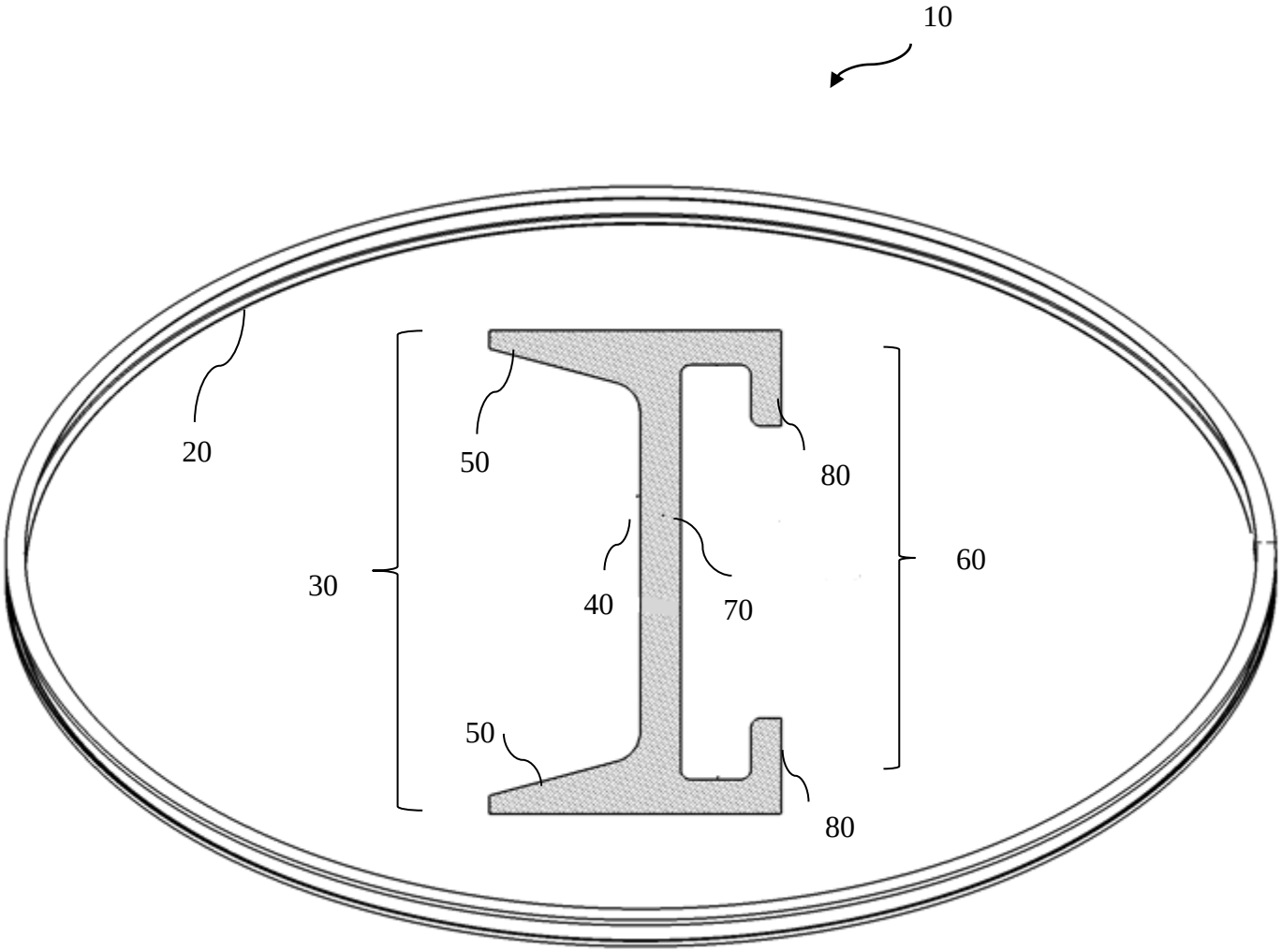

FIG. 1

Signature

Vidya Bhaskar Singh Nandiyal
Patent Agent (IN/PA-2912)
Agent for the Applicant

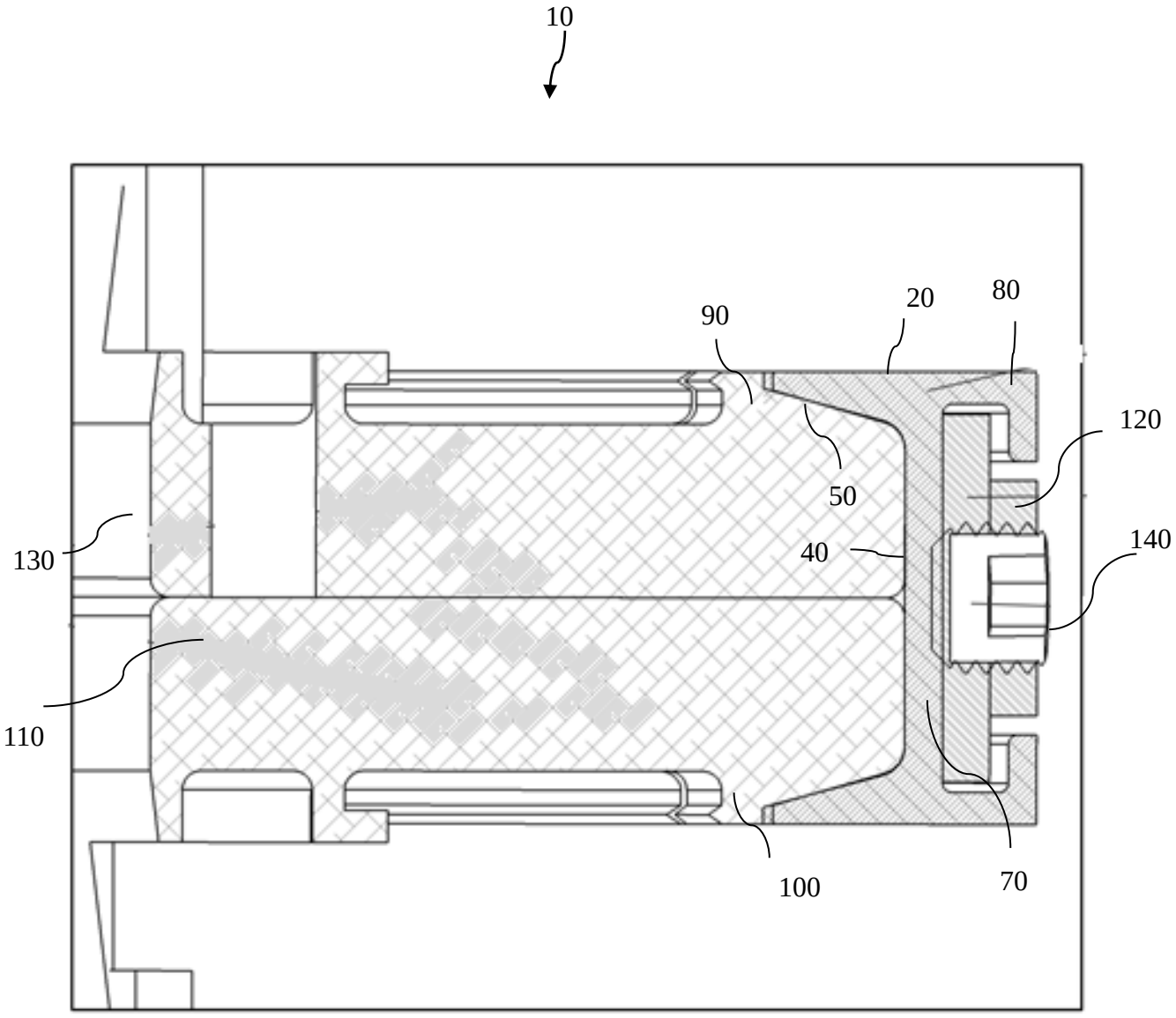

FIG. 2

Signature

Vidya Bhaskar Singh Nandiyal
Patent Agent (IN/PA-2912)
Agent for the Applicant

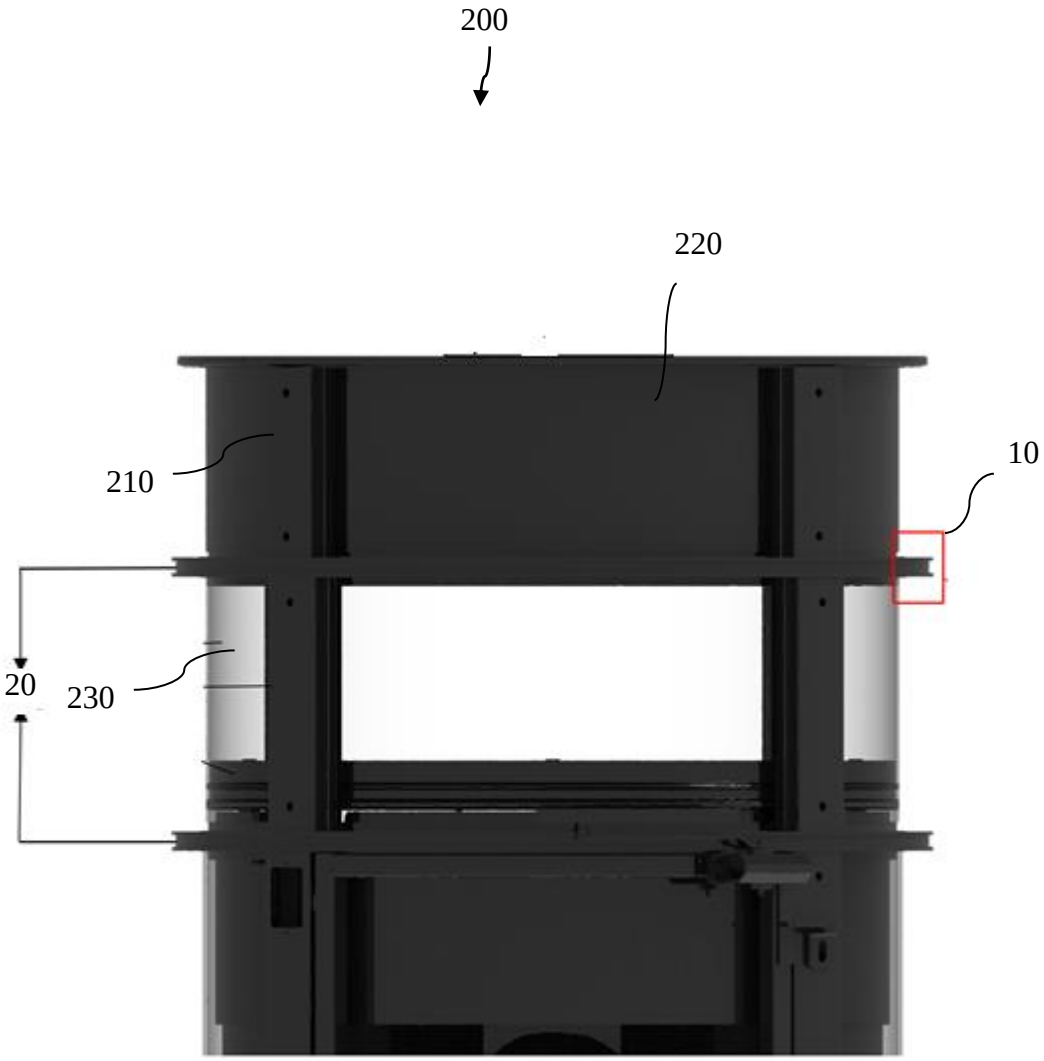

FIG. 3

Signature

Vidya Bhaskar Singh Nandiyal
Patent Agent (IN/PA-2912)
Agent for the Applicant

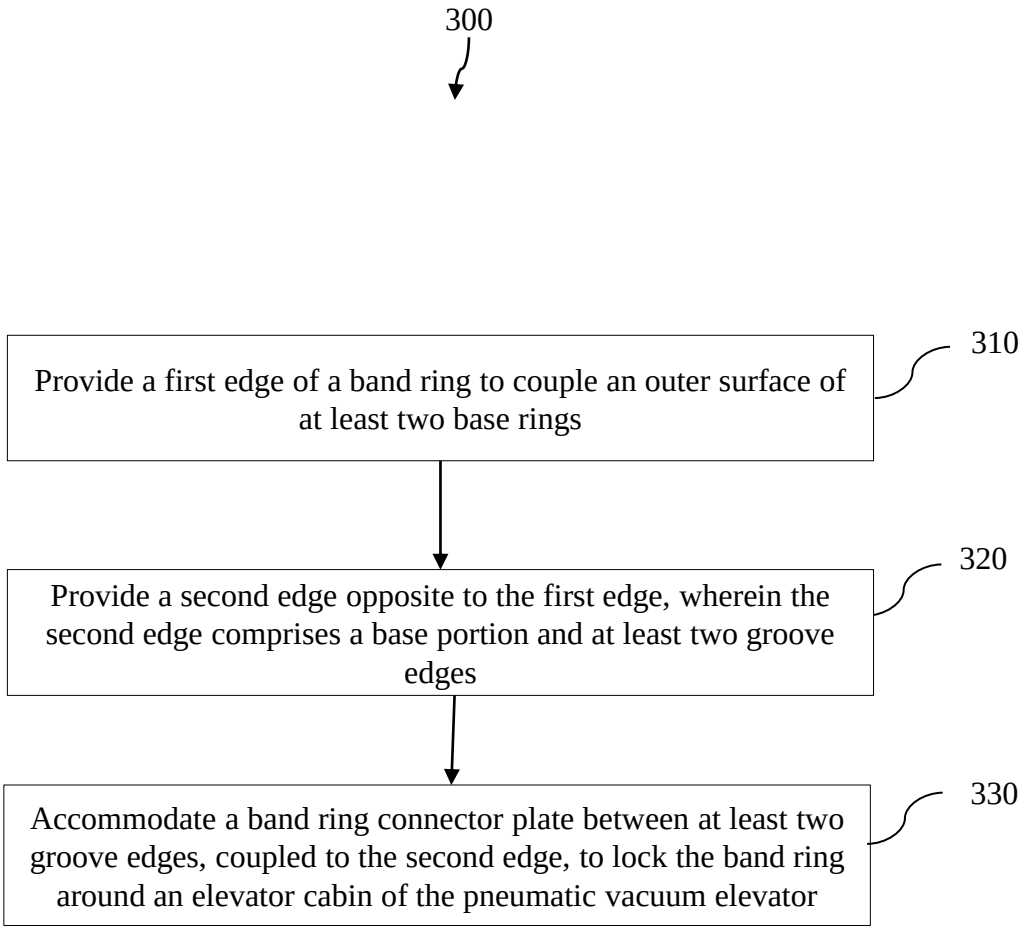

FIG. 4

Signature

Vidya Bhaskar Singh Nandiyal
Patent Agent (IN/PA-2912)
Agent for the Applicant