PCT WORLD INTELLECTUAL PROPERTY ORGANIZATION
International Bureau

INTERNATIONAL APPLICATION PUBLISHED UNDER THE PATENT COOPERATION TREATY (PCT)

(51) International Patent Classification 5 :		(11) International Publication Number: WO 93/03699
A61F 5/44, 13/15	A3	(43) International Publication Date: 4 March 1993 (04.03.93)

(21) International Application Number: PCT/US92/06709

(22) International Filing Date: 7 August 1992 (07.08.92)

(30) Priority data:
743,950 12 August 1991 (12.08.91) US

(71) Applicant: THE PROCTER AND GAMBLE COMPANY [US/US]; One Procter & Gamble Plaza, Cincinnati, OH 45202 (US).

(72) Inventors: YOUNG, Gerald, Alfred ; 1101 Hearthstone Drive, Cincinnati, OH 45231 (US). LaVON, Gary, Dean ; 10132 Lee's Creek, Harrison, OH 45030 (US). TAYLOR, Gregory, Wade ; 463 Blue Teal Drive, Cincinnati, OH 45246 (US).

(74) Agent: REED, T. David; The Procter & Gamble Company, Ivorydale Technical Center, 5299 Spring Grove Avenue, Cincinnati, OH 45217-1087 (US).

(81) Designated States: AU, BB, BG, BR, CA, CS, FI, HU, JP, KP, KR, LK, MG, MN, MW, NO, PL, RO, RU, SD, European patent (AT, BE, CH, DE, DK, ES, FR, GB, GR, IE, IT, LU, MC, NL, SE), OAPI patent (BF, BJ, CF, CG, CI, CM, GA, GN, ML, MR, SN, TD, TG).

Published
With international search report.
Before the expiration of the time limit for amending the claims and to be republished in the event of the receipt of amendments.

(88) Date of publication of the international search report:
15 April 1993 (15.04.93)

(54) Title: HIGH EFFICIENCY ABSORBENT ARTICLES FOR INCONTINENCE MANAGEMENT

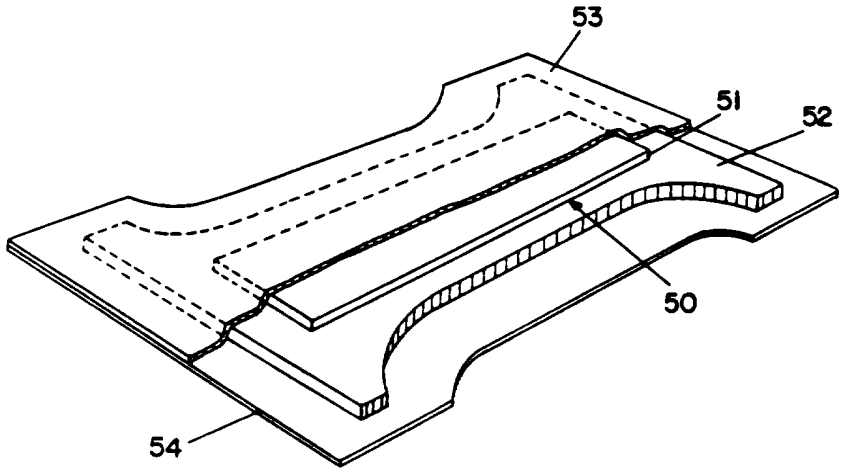

(57) Abstract

Disclosed are absorbent articles, such as diapers, for the management of incontinence. Such articles utilize in their absorbent cores (50) a fluid acquisition/distribution component (51) and a fluid storage/redistribution component (52) maintained in fluid communication with the acquisition/distribution component. The fluid acquisition/distribution component (51) can be any porous hydrophilic, e.g., fibrous or foam-based material which will provide an initial Fluid Acquisition Rate of at least 2 ml of synthetic urine per second and will also preferably provide a 30-minute Vertical Wicking Height of at least 2 cm. The fluid storage/redistribution component (52) comprises a hydrophilic, flexible, open-celled polymeric foam having a free absorbent capacity of at least about 12 ml of synthetic urine per gram of dry foam and an absorbent capacity under a 5.1 kPa confining pressure which is at least 5 % of this free capacity. Preferred fluid acquisition/distribution component materials comprise chemically stiffened, twisted, curled cellulosic fibers. Preferred fluid storage/redistribution component materials comprise absorbent foams prepared by polymerizing a high internal phase emulsion (HIPE).

FOR THE PURPOSES OF INFORMATION ONLY

Codes used to identify States party to the PCT on the front pages of pamphlets publishing international applications under the PCT.

AT	Austria	**FR**	France	**MR**	Mauritania
AU	Australia	**GA**	Gabon	**MW**	Malawi
BB	Barbados	**GB**	United Kingdom	**NL**	Netherlands
BE	Belgium	**GN**	Guinea	**NO**	Norway
BF	Burkina Faso	**GR**	Greece	**NZ**	New Zealand
BG	Bulgaria	**HU**	Hungary	**PL**	Poland
BJ	Benin	**IE**	Ireland	**PT**	Portugal
BR	Brazil	**IT**	Italy	**RO**	Romania
CA	Canada	**JP**	Japan	**RU**	Russian Federation
CF	Central African Republic	**KP**	Democratic People's Republic of Korea	**SD**	Sudan
CG	Congo			**SE**	Sweden
CH	Switzerland	**KR**	Republic of Korea	**SK**	Slovak Republic
CI	Côte d'Ivoire	**LI**	Liechtenstein	**SN**	Senegal
CM	Cameroon	**LK**	Sri Lanka	**SU**	Soviet Union
CS	Czechoslovakia	**LU**	Luxembourg	**TD**	Chad
CZ	Czech Republic	**MC**	Monaco	**TG**	Togo
DE	Germany	**MG**	Madagascar	**UA**	Ukraine
DK	Denmark	**ML**	Mali	**US**	United States of America
ES	Spain	**MN**	Mongolia	**VN**	Viet Nam
FI	Finland				

INTERNATIONAL SEARCH REPORT

International Application No PCT/US 92/06709

I. CLASSIFICATION OF SUBJECT MATTER (if several classification symbols apply, indicate all)[6]

According to International Patent Classification (IPC) or to both National Classification and IPC

Int.Cl. 5 A61F5/44; A61F13/15

II. FIELDS SEARCHED

Minimum Documentation Searched[7]

Classification System	Classification Symbols
Int.Cl. 5	A61F

Documentation Searched other than Minimum Documentation to the Extent that such Documents are Included in the Fields Searched[8]

III. DOCUMENTS CONSIDERED TO BE RELEVANT[9]

Category °	Citation of Document,[11] with indication, where appropriate, of the relevant passages[12]	Relevant to Claim No.[13]
Y	EP,A,0 343 940 (THE PROCTER & GAMBLE COMPANY) 29 November 1989 see column 13, line 59 - column 18, line 13 ---	1-8
Y	GB,A,2 215 609 (THE PROCTER & GAMBLE COMPANY) 27 September 1989 see page 7, line 3 - page 27 ---	1-8
Y	US,A,4 822 453 (THE PROCTER & GAMBLE COMPANY) 18 April 1989 cited in the application see column 4, line 62 - column 7, line 44 see column 20, line 38 - column 21, line 49 --- -/--	1-8

° Special categories of cited documents :[10]

"A" document defining the general state of the art which is not considered to be of particular relevance

"E" earlier document but published on or after the international filing date

"L" document which may throw doubts on priority claim(s) or which is cited to establish the publication date of another citation or other special reason (as specified)

"O" document referring to an oral disclosure, use, exhibition or other means

"P" document published prior to the international filing date but later than the priority date claimed

"T" later document published after the international filing date or priority date and not in conflict with the application but cited to understand the principle or theory underlying the invention

"X" document of particular relevance; the claimed invention cannot be considered novel or cannot be considered to involve an inventive step

"Y" document of particular relevance; the claimed invention cannot be considered to involve an inventive step when the document is combined with one or more other such documents, such combination being obvious to a person skilled in the art.

"&" document member of the same patent family

IV. CERTIFICATION

1

Date of the Actual Completion of the International Search	Date of Mailing of this International Search Report
23 FEBRUARY 1993	04. 03. 93
International Searching Authority	**Signature of Authorized Officer**
EUROPEAN PATENT OFFICE	ARGENTINI A.

III. DOCUMENTS CONSIDERED TO BE RELEVANT (CONTINUED FROM THE SECOND SHEET)

Category °	Citation of Document, with indication, where appropriate, of the relevant passages	Relevant to Claim No.
Y	EP,A,0 223 486 (THE PROCTER & GAMBLE COMPANY) 27 May 1987 see the whole document ---	1-8
A	EP,A,0 222 585 (THE PROCTER & GAMBLE COMPANY) 20 May 1987 see abstract ---	1-8
A	EP,A,0 223 487 (THE PROCTER & GAMBLE COMPANY) 27 May 1987 see abstract ---	1-8
A	EP,A,0 160 572 (PERSONAL PRODUCTS COMPANY) 6 November 1985 see the whole document -----	1-8

ANNEX TO THE INTERNATIONAL SEARCH REPORT ON INTERNATIONAL PATENT APPLICATION NO.

US 9206709
SA 63486

This annex lists the patent family members relating to the patent documents cited in the above-mentioned international search report.
The members are as contained in the European Patent Office EDP file on
The European Patent Office is in no way liable for these particulars which are merely given for the purpose of information. 23/02/93

Patent document cited in search report	Publication date	Patent family member(s)		Publication date
EP-A-0343940	29-11-89	US-A-	4988345	29-01-91
		JP-A-	2060645	01-03-90
GB-A-2215609	27-09-89	US-A-	4935022	19-06-90
US-A-4822453	18-04-89	AU-B-	614717	12-09-91
		AU-A-	7475087	04-02-88
		CA-A-	1292217	19-11-91
		DE-A-	3781728	22-10-92
		EP-A,B	0251675	07-01-88
		JP-A-	63054159	08-03-88
EP-A-0223486	27-05-87	CA-A-	1294119	14-01-92
		DE-A-	3686391	17-09-92
		JP-A-	62167564	23-07-87
		US-A-	4790839	13-12-88
EP-A-0222585	20-05-87	DE-A-	3684239	16-04-92
		JP-A-	62167563	23-07-87
		US-A-	4787896	29-11-88
EP-A-0223487	27-05-87	DE-A-	3683454	27-02-92
		JP-A-	62167562	23-07-87
		US-A-	4781711	01-11-88
EP-A-0160572	06-11-85	US-A-	4676784	30-06-87
		AU-B-	583264	27-04-89
		AU-A-	4188585	07-11-85
		CA-A-	1239012	12-07-88
		JP-A-	60249953	10-12-85