July 29, 1952 G. E. HENNING ET AL 2,605,052

METHOD OF AND APPARATUS FOR COILING FILAMENTARY ARTICLES

Filed March 9, 1949 5 Sheets-Sheet 1

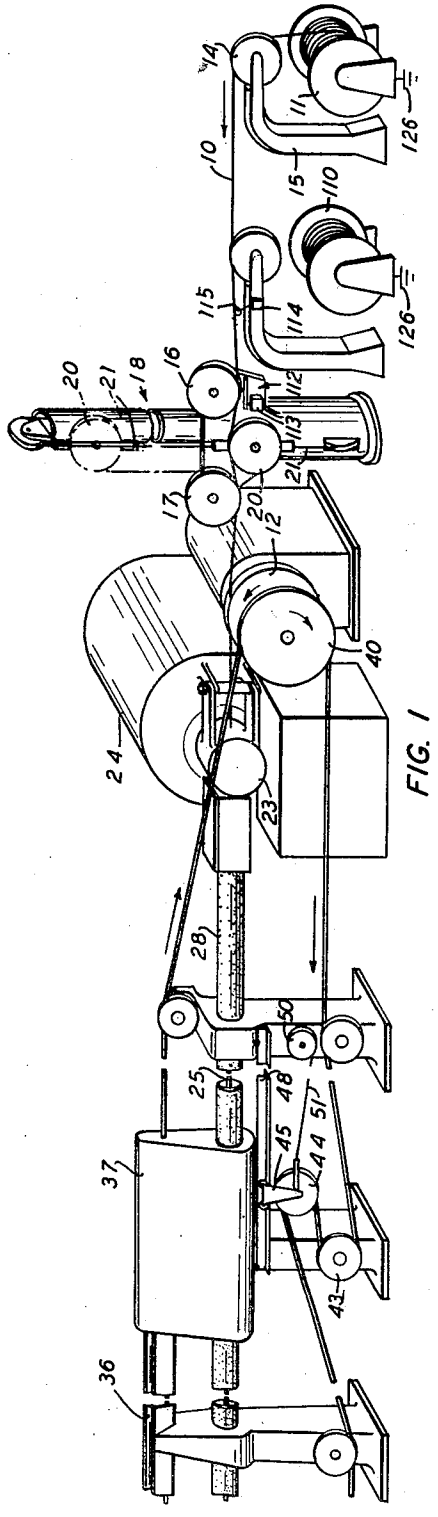

FIG. 1

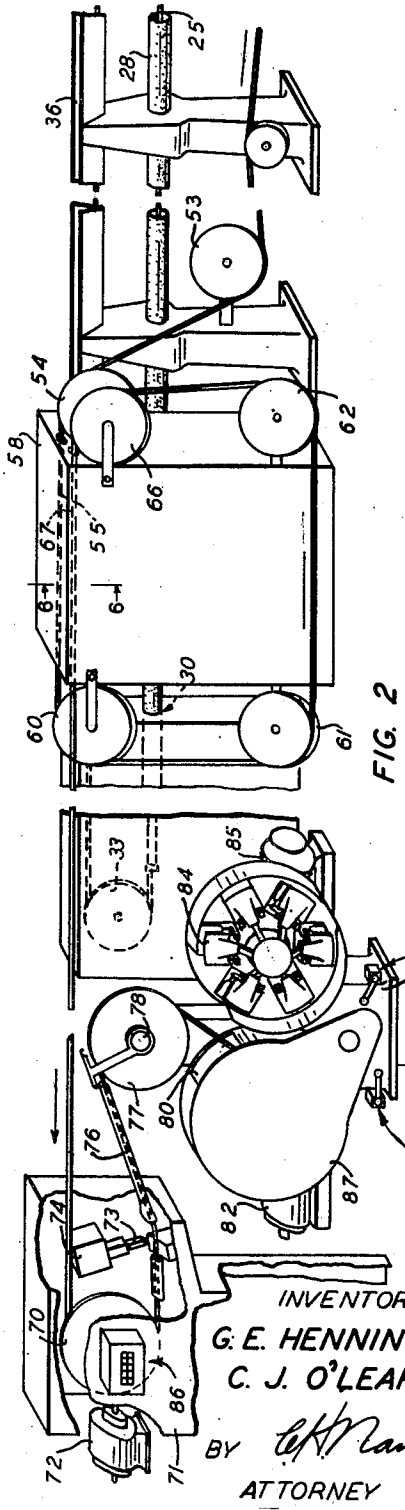

FIG. 2

INVENTORS
G. E. HENNING
C. J. O'LEARY
BY
ATTORNEY

July 29, 1952 G. E. HENNING ET AL 2,605,052

METHOD OF AND APPARATUS FOR COILING FILAMENTARY ARTICLES

Filed March 9, 1949 5 Sheets-Sheet 2

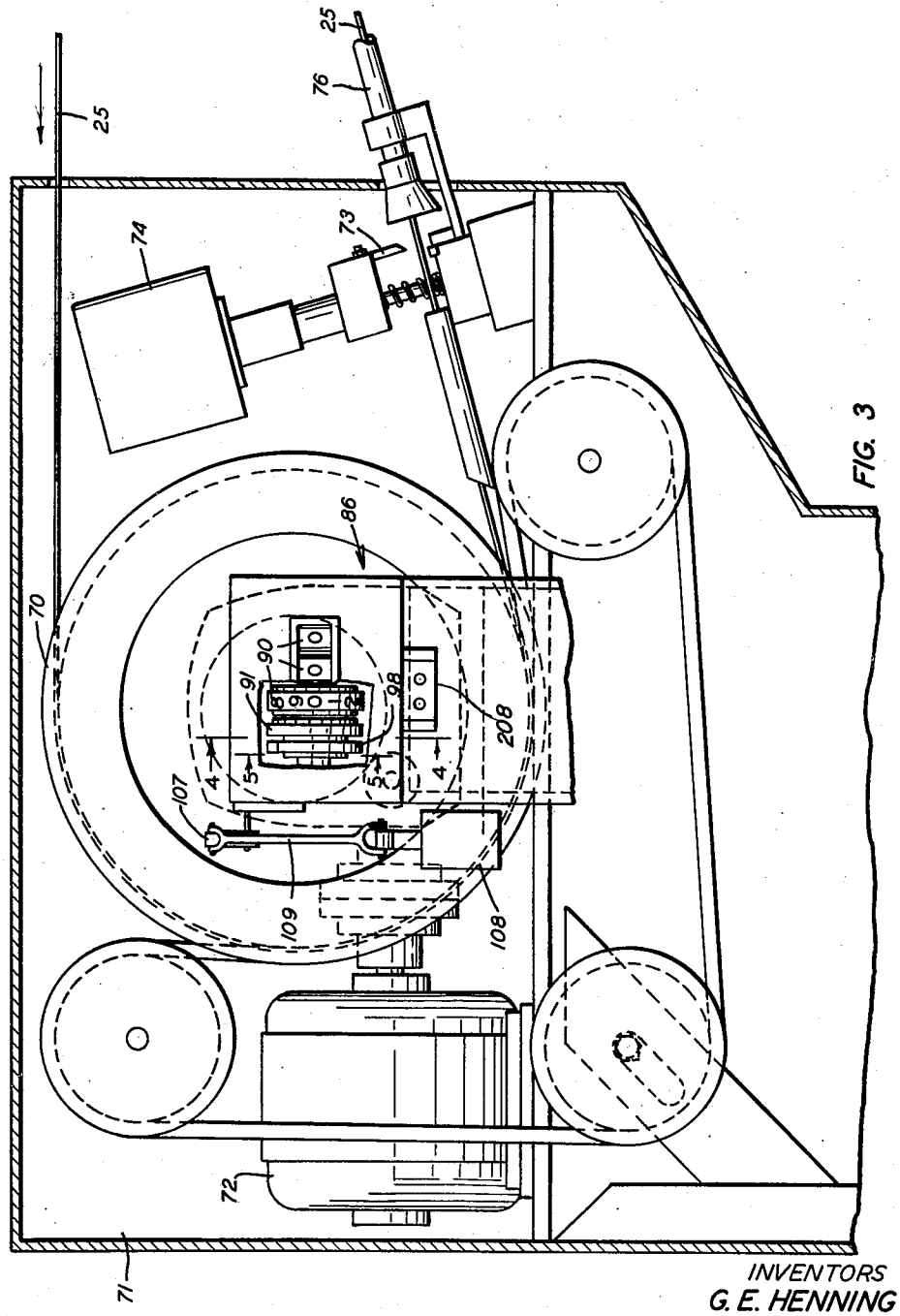

FIG. 3

INVENTORS
G. E. HENNING
C. J. O'LEARY

BY
ATTORNEY

July 29, 1952 G. E. HENNING ET AL 2,605,052

METHOD OF AND APPARATUS FOR COILING FILAMENTARY ARTICLES

Filed March 9, 1949 5 Sheets-Sheet 3

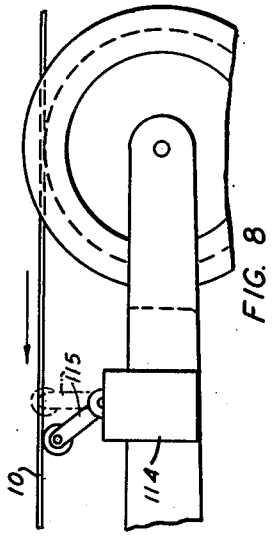

FIG. 8

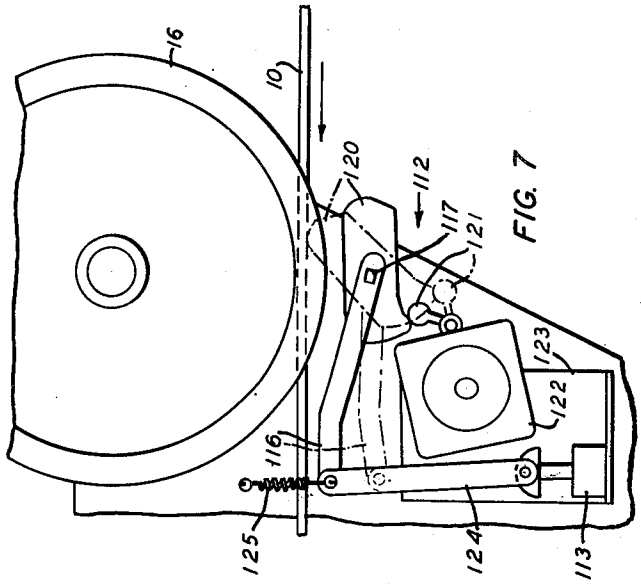

FIG. 7

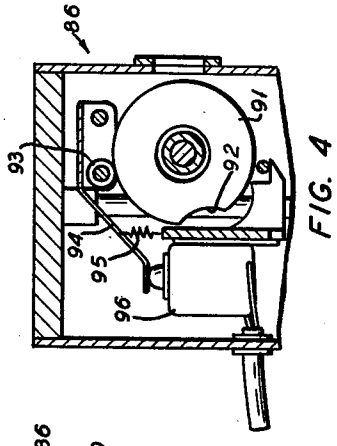

FIG. 4

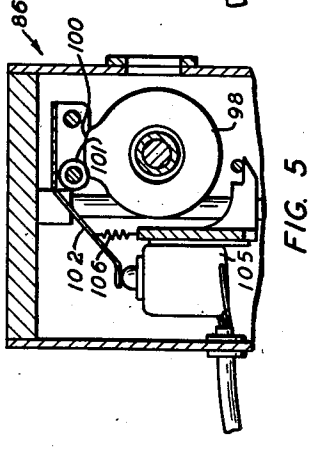

FIG. 5

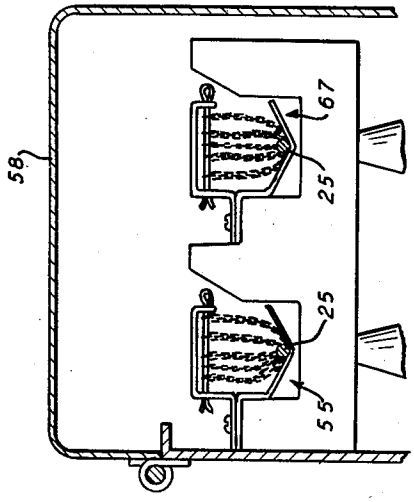

FIG. 6

INVENTORS
G. E. HENNING
C. J. O'LEARY
BY
ATTORNEY

July 29, 1952 G. E. HENNING ET AL 2,605,052

METHOD OF AND APPARATUS FOR COILING FILAMENTARY ARTICLES

Filed March 9, 1949 5 Sheets-Sheet 4

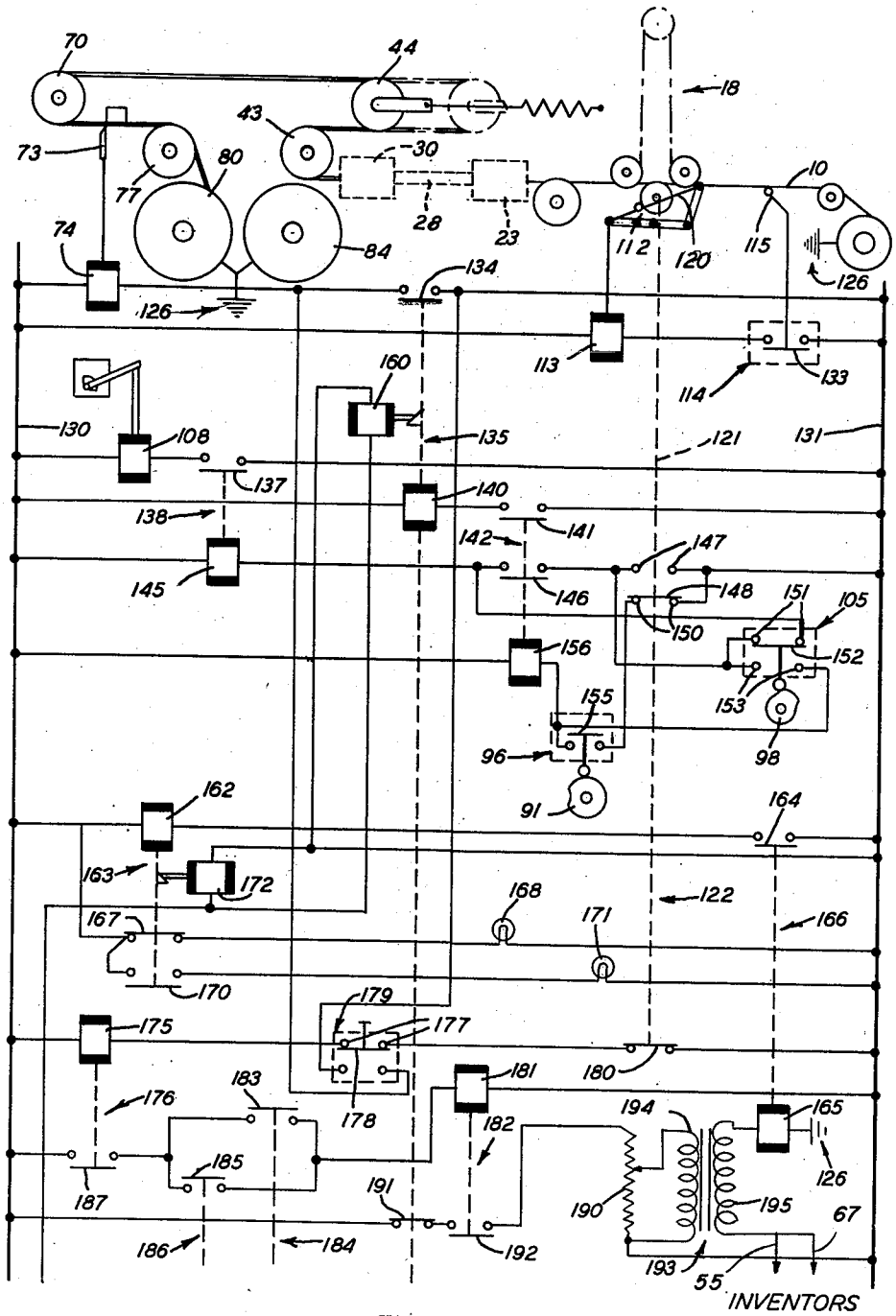

FIG. 9

INVENTORS
G. E. HENNING
C. J. O'LEARY
BY
ATTORNEY

July 29, 1952 G. E. HENNING ET AL 2,605,052

METHOD OF AND APPARATUS FOR COILING FILAMENTARY ARTICLES

Filed March 9, 1949 5 Sheets-Sheet 5

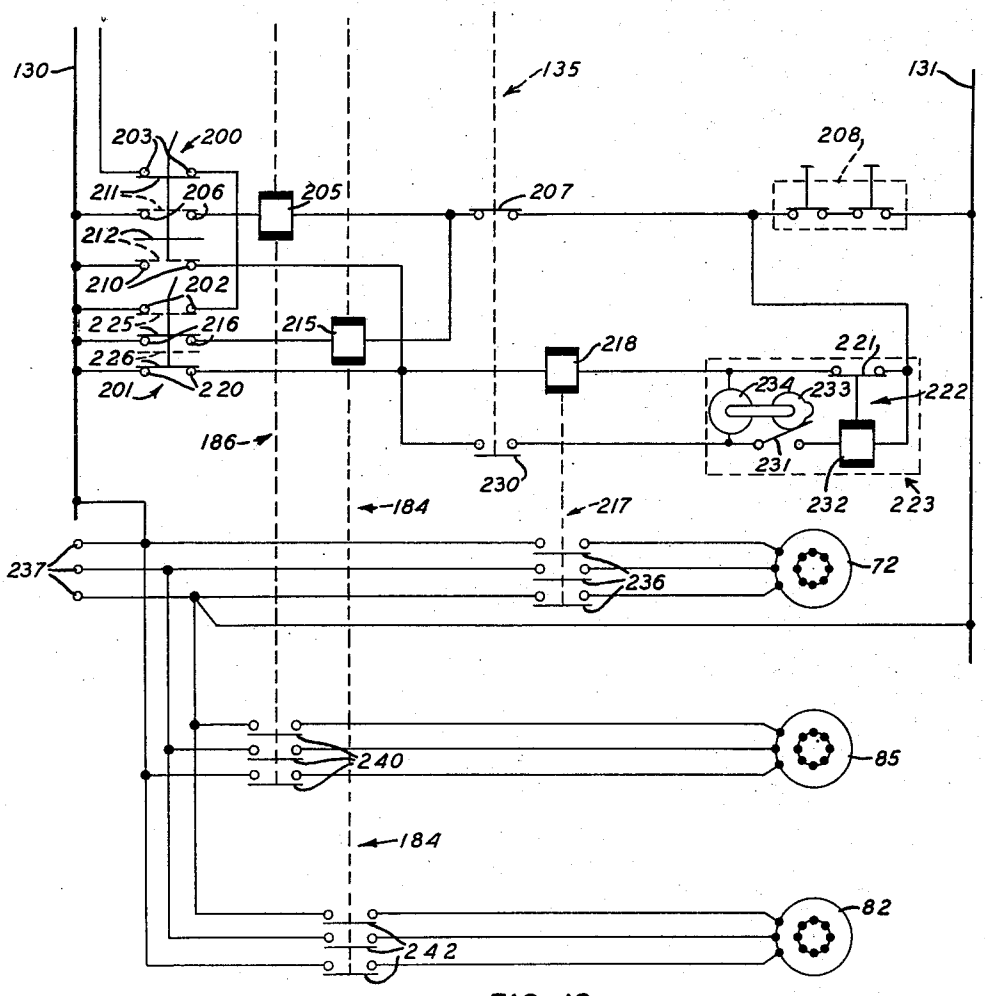

FIG. 10

INVENTORS
G. E. HENNING
C. J. O'LEARY
BY
ATTORNEY

Patented July 29, 1952

2,605,052

UNITED STATES PATENT OFFICE

2,605,052

METHOD OF AND APPARATUS FOR COILING FILAMENTARY ARTICLES

George E. Henning and Charles J. O'Leary, Baltimore, Md., assignors to Western Electric Company, Incorporated, New York, N. Y., a corporation of New York

Application March 9, 1949, Serial No. 80,506

24 Claims. (Cl. 242—25)

1

This invention relates to methods of and apparatus for coiling filamentary articles, and more particularly to methods of and apparatus for coiling a continuously advancing filamentary conductor into predetermined lengths.

Some types of filamentary materials, such as electrical conductors, are susceptible of being manufactured by means of a substantially continuous process in which the filamentary material is continuously advanced from a supply thereof through a series of manufacturing apparatus and processes, taken up at the end thereof and cut into coils each having a predetermined length of the material. To maintain a continuous supply of the filamentary material through the apparatus to be coiled up it is necessary to connect the end of a like material from another supply thereof to the material being coiled up each time the supply of material is exhausted at the beginning of its path of travel. Such connections usually are not intended to form a continuous length of material and must be removed from the coils of material in which they are included. It has been the practice in industry associated with such manufacturing processes to include the connections in the coils and then rewind and cut such coils to remove the connection therefrom. This procedure often produces coils of material which contain less than the minimum or usable length of material required per coil and results in a substantial waste of the material and extra handling of the completed coils. To eliminate such waste of material and maintain minimum handling thereof, the present invention contemplates controlling of the coiling apparatus in such a manner that the connection between the lengths of material always is located at the end of a completed coil from which position it may be removed readily without rewinding and cutting the coil.

An object of the invention is to provide improved methods of and apparatus for coiling a continuous advancing filamentary article into predetermined lengths.

Another object of the invention is to provide improved methods of and apparatus for coiling a continuously advancing filamentary conductor into coils having such lengths that the splices in the conductors will not be included in the coils.

In attaining these objects, a method illustrating certain features of the invention comprises advancing a filamentary material from a supply thereof along a predetermined path of travel, coiling the material at the end of its path of travel into coils each having a predetermined length of the article, and terminating the coil in

2

process when the said supply of material is exhausted at the beginning of its path of travel if said coil contains a predetermined minimum length of the filamentary material or continuing to coil up the material upon said coil in process until an additional predetermined length of the material is coiled thereon if said coil contains less than the minimum footage of the filamentary article when said supply thereof is exhausted.

An apparatus illustrating certain features of the invention, comprises means for advancing a filamentary material from a supply thereof along a predetermined path of travel, means for intermittently coiling the filamentary material at the end of its path of travel into coils having a predetermined length until the supply of the filamentary material being coiled up is exhausted, and means for selectively terminating the coil in process when the supply of said material is exhausted if the coil contains a predetermined minimum footage of the material or continuing the coiling process until an additional predetermined footage of the material is coiled thereon.

Other objects and advantages of the invention will appear from the following detailed description of a specific embodiment thereof when read in conjunction with the accompanying drawings, in which:

Fig. 1 is a side elevation of a portion of a continuous extruding and vulcanizing apparatus embodying certain features of the invention;

Fig. 2 is a side elevation of a portion of the apparatus shown in Fig. 1, and extending to the left of the portion of the apparatus shown in Fig. 1;

Fig. 3 is an enlarged, fragmentary view of a portion of the left end of the apparatus shown in Fig. 2;

Fig. 4 is an enlarged, fragmentary, sectional view taken along line 4—4 of Fig. 3;

Fig. 5 is an enlarged, fragmentary, sectional view taken along line 5—5 of Fig. 3;

Fig. 6 is a fragmentary, sectional view taken along line 6—6 of Fig. 2;

Fig. 7 is an enlarged, fragmentary, sectional view of a portion of the apparatus shown in Fig. 1;

Fig. 8 is an enlarged, fragmentary, sectional view of a portion of the apparatus shown in Fig. 1, and

Figs. 9 and 10 combined, constitute a schematic wiring diagram of the electrical system embodied in the pertinent apparatus of the invention.

In the apparatus shown in Figs. 1 and 2, a filamentary core 10, which may be a bare filamen-

tary conductor or an insulated conductor, is wound on a supply reel 11 which is rotatably mounted so that the core 10 may be withdrawn therefrom. The core 10 is withdrawn from the reel 11 by a capstan 12 driven in a counterclockwise direction by suitable power means (not shown), and passes around a guide pulley 14 positioned directly above the reel 11 on a support 15. The core 10 then passes under pulleys 16 and 17, rotatably mounted on a support mounted at the base of a cutover tower 18 and over a pulley 20 slidably mounted on the cutover tower by means of an endless cable belt 21 to a suitable counterweight (not shown) adapted to ride in the vertical part of the cutover tower and urge the pulley 20 toward the top of the cutover tower. Suitable braking is applied to the reel 11 by braking apparatus (not shown) so that a predetermined tension is exerted on the core 10 as it is withdrawn from the reel by the capstan 12. The pulley 20 normally is latched in its lowermost position on the cutover tower against the action of the counterweight. The pulley 20 may be positioned at the top of the cutover tower 18 to form a vertical takeup loop in the path of travel of the core 10 by unlatching it from the base of the cutover tower and reducing the braking force applied to the reel 11 until the counterweight overcomes the tension in the core 10 between the reel 11 and the capstan 12.

The core 10 (Fig. 1), after passing around the capstan 12, advances therefrom through an extruding head 23 forming a part of a conventional screw type extruding apparatus 24 which applies a vulcanizable covering around the advancing core 10 to form an insulated conductor 25. The insulated conductor 25 passes from the extruding head through an elongated tube 28 containing high pressure, high temperature steam for the purpose of vulcanizing the insulating covering as the conductor 25 passes therethrough. The conductor 25 passes from the tube 28 through a cooling tube indicated generally at 30, which contains water under pressure to cool the vulcanized covering on the advancing conductor 25. The conductor 25, thereafter, passes around a guide sheave 33 which reverses the direction of travel of the conductor, whereby the conductor now is traveling from left to right in Figs. 1 and 2.

The conductor 25 (Fig. 2) now passes along a V-shaped trough 36, which is partially filled with water, to an air-wiper 37 (Fig. 1) provided for the purpose of removing the moisture on the insulated covering of the conductor 25. The dry conductor emerging from the air-wiper passes around a capstan 40 which is driven in a clockwise direction by the same power means provided for the capstan 12 and thereafter travels from right to left to a pulley 43 and around the pulley 43 to a pulley 44 rotatably mounted on a bracket 45 adapted to ride on a T-shaped rail 46. The movable pulley 44 is adapted to form a horizontal, expandible loop in the path of travel of the conductor 25 as it travels from the capstan 40 through the remaining portion of the apparatus shown in Fig. 2. A drum 50 is suitably mounted on the apparatus and is provided with a steel cable 51 wound thereon, a portion of which is shown withdrawn therefrom and connected to the bracket 45 carrying the pulley 44. The drum 50 is provided with an internal spring mechanism (not shown) which maintains a constant pull on the bracket 45 and continually urges the bracket 45 and the pulley 44 toward the right-hand end of the track 46.

After passing around the pulley 44 (Fig. 1), the conductor 25 continues moving to the left and passes around a pulley 53 (Fig. 2) and then upwardly and around a pulley 54 which guides the conductor through an electrode 55 (Fig. 6) mounted in a housing 58. The conductor 25, upon emerging from the electrode 55, passes around the pulley 60, and travels downwardly and around a pulley 61 and then travels to the right to a pulley 62. The conductor 25 passes around the pulley 62 and travels upwardly to a pulley 66 which guides the conductor through an electrode 67 mounted in the housing 58. The conductor 25 travels from the electrode 67 to a capstan 70 mounted in a housing 71 and driven by a motor 72. The capstan 70 serves to advance the conductor 25 from the capstan 40 beneath a knife 73 arranged to be actuated by a solenoid 74 and then through a tube 76 which guides the conductor 25 to a pulley 77 rotatably mounted on a traversing shaft 78. The knife 73 and the solenoid 74 are disclosed and claimed in copending application Serial No. 57,014, filed October 28, 1948, by D. C. Robson for "Apparatus for Advancing and Severing Strands."

The conductor 25 (Fig. 2) passes around the pulley 77 and then is coiled up by a coiling head 80 rotatably mounted on a support 81 and driven by a motor 82. When the coiling head 80 is rotated by the motor 82 to take up the conductor 25, the traversing shaft 78 moves the pulley transversely with respect to the rotating axis of the coiling head so as to distribute the conductor evenly on the coiling head. A second coiling head 84 is rotatably mounted on the stand 81 and arranged to be driven by a motor 85. A counter 86 is arranged to be driven by the motor 72 so as to continuously register the footage of the conductor 25 taken up by the coiling heads 80 and 84. The second coiling head 84 is provided for the purpose of maintaining continuous coiling of the conductor 25, wherein, as soon as the coiling head in operation has coiled up a predetermined footage of the conductor 25, the conductor is severed by the knife 73 and the leading end of the conductor 25 emerging from the tube 76 is secured to the empty coiling head. The motor driving the empty coiling head is energized and the coiling head coils up the conductor 25 while the previously wound coil is removed from the coiling head. A cover 87 is pivotally mounted on the stand 81 so that it may be selectively positioned to enclose the cooling head that is rotating to coil up the conductor 25.

The coiling heads 80 and 84 and the cover 87 are disclosed and claimed in copending application Serial No. 738,444, filed March 31, 1947, now Patent No. 2,561,736, issued July 24, 1951, by E. D. Hanson for "Apparatus for Continuously Coiling Elongated Filaments."

The counter 86 (Fig. 3) may be any conventional type of counter having at least units, tenths and hundredths wheels 90—90 arranged to be driven by the motor 72 so as to record the footage of the conductor 25 being coiled up by the coiling heads. A cam 91 (Figs. 3 and 4), is secured to the hundredths wheel 90 and is provided with a recess 92 positioned on its periphery. The cam 91 is secured to the hundredths wheel 90 so that the recess 92 is positioned between the digits "4" and "5" on the hundredths wheel, so that when the hundredths wheel is advanced in a counterclockwise direction to bring the digit "8" opposite the window of the counter, the recess 92 engages a roller 93 mounted on a pivotally mounted arm 94. The roller 93 is urged against the periphery of the cam 91 by a tension spring 95 secured between

the free end of the arm 94 and the counter structure. The free end of the arm 94 is arranged to actuate the operating button of a sensitive switch 96 positioned in the counter each time the recess 92 moves under the roller 93.

A second cam 98 (Figs. 3 and 5) is also positioned on the counter wheel shaft so as to rotate with the hundredths wheel 90. The cam 98 is provided with a single lobe 100 having a predetermined peripherial length, and is oriented with respect to the digits on the hundredths wheels so that when the zero digit is directly opposite the window in the counter, the leading end of the lobe 100 engages a roller 101 mounted on an arm 102 pivotally mounted in the counter housing. When the hundredths wheel is advanced to bring the digit "2" opposite the window of the counter, the lobe 100 passes beyond the roller 101 and allows a spring 106 to urge the arm 102 downwardly and actuate the operating button of another sensitive switch 105 positioned in the counter 86. The cams 91 and 98 are arranged on the counter to cause the coiling heads 80 and 84 normally to coil up 800 feet of the conductor 25, and to prevent them from coiling up less than 200 feet or more than 1000 feet of the conductor.

The counter 86 (Fig. 3) is provided with a mechanism for resetting the wheels 90—90 to their normal starting position, the mechanism being arranged to be actuated by movement of a lever 107 mounted on the counter housing. The lever 107 is arranged to be actuated by a solenoid 108 which has its armature connected to the end of the lever 107 by a connecting link 109.

A second supply reel 110 (Fig. 1), having a core like the core 10 wound thereon, is also mounted on a rotatable support so that the core may be withdrawn therefrom and advanced through the extruding and vulcanizing apparatus to the coiling heads 80 and 84 in the manner described for the core 10. When substantially all of the core 10 is withdrawn from the reel 11, the trailing end of the core 10 from the exhausted reel 11 must be stopped temporarily so that it can be connected to the leading end of the core wound on the reel 110 in order that the capstans 12 and 40, the extruding apparatus, the vulcanizing apparatus and the coiling heads 80 and 84 remain in continuous operation. The ends of the cores are connected or spliced to each other by a suitable hook type of connector in which the respective portions of the connector are connected to the ends of their respective cores when it is wound on the reels 11 and 110.

A clamp, indicated generally at 112 (Figs. 1 and 7), is mounted on the cutover tower under the pulley 16 to clamp the core 10 tightly in the groove of the pulley 16 to stop further advancement of the core 10 so that the ends of the conductors may be connected together. The clamp 112 is arranged to be actuated by a solenoid 113 whose energization is controlled by a runout switch 114 (Fig. 8) having an operating lever 115 held in its actuated position by the core being withdrawn from the reels 11 or 110. When the end of the core leaves either of the supply reels, the tension in the end of the core is lost and the lever is released to its normal or vertical position as shown in broken lines in Fig. 8.

The clamp 112 (Fig. 7) provided on the cutover tower 18, consists of an arm 116 secured to a shaft 117 rotatably mounted in a suitable manner on the support carrying the pulleys 16 and 17. A shoe 120 is secured on the shaft 117 so that when the arm 116 is actuated to its broken line position (Fig. 7), the right end of the shoe engages the core 10 and clamps it tightly against the bottom of the groove of the pulley 16. The opposite end of the shoe 120 is arranged to engage an operating lever 121 of a switch 122 also mounted on the support carrying the pulleys 16 and 17. The solenoid 113 is mounted on the bracket 123 secured to the pulley support and its plunger is connected to the end of the arm 116 by a connecting link 124. A spring 125 is positioned between a point on the pulley support of the cutover tower and the end of the arm 116 so as to hold the arm in its full line position shown in Fig. 7. The core 10 is grounded at the supply reels 11 and 110, and at the coiling heads 80 and 84, which grounds are indicated at 126—126. One method of grounding the core 10 at the coiling heads 80 and 84 is disclosed and claimed in copending application Serial No. 24,313, filed April 30, 1948, by E. D. Hanson, for "Collapsible Coiling Heads."

A high voltage testing circuit is provided in which one side thereof is connected to the same ground 126 and the other side thereof is connected to the electrodes 55 and 67. As a result, when the conductor 25 engages the electrodes 55 and 67, a voltage is impressed across the insulating jacket of the conductor having an intensity sufficient to break down any faults in the insulation which provide paths of reduced dielectric strength between the electrodes and the grounded metallic conductor of the core 10. When the shoe 120 is turned to clamp the end of the core 10 against further movement, it also actuates the lever 121 which in turn opens a contact of the switch 122 to deenergize the electrode 55 and 67 in a manner hereinafter to be described.

The coiling apparatus described hereinabove is automatically controlled by an electrical circuit shown in Figs. 9 and 10 so that it will continuously coil up coils having a predetermined footage of good conductor 25 thereon, which footage is varied according to the footage of the conductor coiled up at the time a connection is made between the ends of the cores at the supply reels. The electrical circuit shown schematically in Figs. 9 and 10, comprises a pair of low voltage busses 130 and 131 from which all the control apparatus receives its operating voltage.

The solenoid 113, which is arranged to actuate the clamp is connected across the busses 130 and 131 in series with a normally closed contact 133 provided in the runout switch 114, the contact 133 being maintained in its open position when its operating lever 115 engages the core 10 being withdrawn from the supply reel. The solenoid coil 74, which actuates the cutter blade 73, is connected across the busses 130 and 131 in series with a normally open contact 134 provided on a relay 135. The solenoid 108, which is arranged to actuate the reset lever 107 of the counter 86, is connected across the busses 130 and 131 in series with a normally open contact 137 provided on a relay indicated generally at 138. The relay 135 has its operating coil 140 connected across the busses 130 and 131 in series with a normally open contact 141 provided on a relay 142. The relay 138 has its operating coil 145, connected across the busses 130 and 131 in series with a normally open contact 146 provided on the relay 142 and the contacts 147—147 of the switch 122, which contacts are arranged to be engaged by an arm 148 actuated by the lever 121. The switch 122 is provided with a second

pair of contacts 150—150 which are engaged by the arm 148 when the clamp 112 is in its open position shown in Fig. 7.

The switch 105, which is mounted in the counter 86, is provided with a pair of contacts 151—151 which are engaged for a predetermined portion of each coiling operation by an arm 152 whose movement is controlled by the cam 98. The switch 105 has a second pair of contacts 153—153 which are arranged to be selectively engaged by the arm 152 according to the position of the cam 98. The switch 96, which is mounted in the counter 86, is provided with a normally open contact 155, arranged to be actuated to its closed position by the arm 94 when the recess 92 passes under the roller 93 carried by the arm. The contacts 147 and 150 of the switch 122 which are adjacent to the bus 131 are connected together, and the contacts 151 and 153 of the switch 105 which are adjacent to the bus 130 are connected together. The coil 145 of the relay 138 is connected across the busses 130 and 131 when the contact arm 152 of the switch 105 engages the contacts 151—151 and the contact arm 148 of the switch 122 engages the contacts 147—147. The coil 145 is also connected across the busses 130 and 131 in series with the contact 146 of the relay 142, the contacts 153—153 of the switch 105 and the contact 155 of the switch 96.

The relay 142 has its operating coil 156 connected across the busses 130 and 131 in series with the contact 155 of the switch 96 and the contacts 150—150 provided in the switch 122, which is arranged to be actuated by the solenoid 113. The coil 156 is also connected across the busses 130 and 131 by an alternate circuit when the contact arm 152 of the switch 105 engages the contacts 153—153 and the contact arm 148 engages the contacts 147—147 of the switch 122. The relay 135 is provided with a spring loaded mechanism for latching the contact arms of the relay in the position they assume when the coil 140 is energized, and a reset coil 160 for actuating the latching mechanism to release the contact arms to their normal positions.

An operating coil 162 (Fig. 9) of a relay 163, is connected across the busses 130 and 131 in series with a normally open contact 164 arranged to be actuated to its closed position by a current coil 165 forming part of a current relay 166. The operating coil 162 of the relay 163, is arranged to actuate a normally closed contact 167 which connects an indicating lamp 168 across the busses 130 and 131 and a normally open contact 170, which contact, when closed connects a second indicating lamp 171 across the busses. The relay 163 is provided with a spring loaded mechanism arranged to latch the contacts 167 and 170 in the position they assume when the coil 162 is energized and a coil 172 is provided for actuating the latch mechanism to release the contacts 167 and 170 to their normal position.

An operating coil 175, of a time delay relay 176, is connected across the busses 130 and 131 in series with contacts 177—177 normally bridged by a contact arm 178 of a push button 179 and a normally closed contact 180 provided on the switch 122. A coil 181 of a relay 182, is connected across the busses 130 and 131 in series with a parallel circuit including a normally open contact 183 provided on a motor contactor 184 and a normally open contact 185 provided on a motor contactor 186, the contacts 183 and 185 being connected in parallel, and a normally open contact 187 of the time delay relay 176. An auto transformer 190 is connected across the busses 130 and 131 in series with a normally closed contact 191 of the relay 135 and a normally open contact 192 of the relay 182. A step-up transformer 193 has its primary winding 194 connected across the terminals of the transformer 190 and its secondary winding 195 arranged to have one side thereof connected directly to testing electrodes 55 and 67 and the other terminals thereof connected to the coil 165 of the current relay 166. The other side of the coil 165 is connected to ground indicated generally at 126 in which case, this side of the coil is the same potential as the core 10 since it is grounded through the supply reels at ground 126.

The wiring diagram shown in Fig. 10 is a continuation of the diagram shown in Fig. 9 when Fig. 10 is positioned directly below Fig. 9.

Referring now to Fig. 10, a pair of limit switches indicated generally at 200 and 201 are positioned on the support 81 so that they are actuated by the cover 87 pivotally mounted on the support. The switches 200 and 201 are so arranged on the support that when the cover 87 encloses the coiling head 80 the contact arms of the switches assume their full line positions, and when the cover encloses the coiling head 84, the contact arms of the switches assume their broken line positions. The reset coils 160 and 172 (Fig. 9), which are provided on the relays 135 and 163, respectively, are connected in parallel with each other and the parallel circuit is connected to the busses 130 and 131 in series with contacts 202—202 of the switch 201 and the contacts 203—203 of the switch 200. The relay 186 has its operating coil 205 connected across the busses 130 and 131 in series with the contacts 206—206 of the switch 200, a normally closed contact 207 provided on the relay 135 and the normally open contacts provided in a push button 208. The switch 200 is provided with a third pair of contacts 210—210, one of which is connected directly to the bus 130. The contacts 203—203, and 206—206 of the switch 200 are arranged to be selectively engaged by a contact arm 211 and the contacts 210—210 are arranged to be engaged by a contact arm 212, the arms 211 and 212 being arranged to be simultaneously actuated by movement of the cover 87.

The relay 184 has its operating coil 215 connected across the busses 130 and 131 in series with contacts 216—216 provided on the limit switch 201, the normally closed contact 207 of the relay 135 and the normally open contacts of the push button 208. A relay 217 is provided with an operating coil 218 which is connected across the busses 130 and 131 in series with contacts 220—220 provided on the switch 201, a normally closed contact 221 provided on a relay 222 forming part of a motor driven timer indicated generally at 223 and the contacts of the push button 208. The contacts 210—210 of the switch 200 are connected in parallel with the contacts 220—220 of the switch 201, in which case the contacts 210—210 provide an alternate circuit for the coil 218 of the relay 217. The switch 201 is provided with a contact arm 225 which is arranged to selectively engage the contacts 202—202 or the contacts 216—216 and a contact arm 226 which is arranged to engage the contacts 220—220. A normally open contact 230, which is provided on the relay 135, is connected across the busses 130 and 131 in series with the parallel circuit including the contacts 210—210

of the switch 200 and the contacts 220—220 of the switch 201, a normally open contact 231 of 223, an operating coil 232 of the timer relay 222 and the contacts of the push button 208.

The normally open contact 231 provided on the timer 223 is arranged to be actuated by a cam 233 driven by a motor 234. The motor 234 provided in the timer 223 for rotating the cam 233 is connected across the busses 130 and 131 in series with the parallel circuit including the contacts 210—210 and 220—220 of the limit switches 200 and 201, respectively, the normally open contact 230 of the relay 135, the normally closed contact 221 of the relay 222 and the contacts of the push button 208. The relay 217 is provided with three normally open contacts 236—236 arranged to be actuated to their closed position by the coil 218 and connect the motor 72, which drives the capstan 70, to terminals 237—237 to which a suitable source of three phase A. C. potential (not shown) may be connected. The relay 186 is provided with three normally open contacts 240—240 arranged to be actuated to their closed position by the coil 205 and connect the motor 85, which drives the coiling head 84, to the potential terminals 237—237. The relay 184 is provided with three normally open contacts 242—242 arranged to be actuated to their closed position by the coil 215 and connect the motor 82, which drives the coiling head 80, to the potential terminals 237—237. The busses 130 and 131 are connected across one phase of the three phase system connected to the terminals 237—237.

Operation

Let it be assumed that the end of the core 10 has been withdrawn from the reel 11, threaded through the extruding head 23, the vulcanizing tube 28, the cooling tube 30, the air-wiper 37, the testing apparatus indicated generally at 58 and secured to the coiling head 80 and that the apparatus has been operating for such a time that a completely insulated and vulcanized conductor 25 has reached the coiling head 80. The normally open contacts of the push button 208 are actuated to the closed position and are arranged to be mechanically latched in their closed position until the latch mechanism is actuated to release them. While the end of the conductor 25 is being secured to the coiling head 80, the cover 87 is positioned to enclose the empty coiling head 84. When the conductor 25 is properly secured to the coiling head 80, the cover then is moved to enclose the coiling head 80, whereupon the movement of the cover actuates the limit switches 200 and 201 to their positions shown in Fig. 10, that is, the contact arms 211 and 212 of the switch 200 engage the contacts 203—203 and disengage the contacts 210—210, respectively, whereas the arms 225 and 226 of the switch 201, engage the contacts 216—216 and 220—220, respectively.

With the limit switches 200 and 201 actuated to their full line positions, the contact arm 225 of the switch 201, connects the coil 215 across the busses 130 and 131 in series with the normally closed contact 207 of the relay 135 and the closed contacts of the push button 208. The coil 215 of the relay 184 is thereby energized and closes the contacts 242—242 to connect the motor 82 to the potential supply terminals 237—237. The arm 226 of the switch 201 bridges the contacts 220—220 and connects the coil 218 of the relay 217 across the busses 130 and 131 in series with the normally closed contact 221 provided on the relay 222 of the timer 223 and the closed contacts of the push button 208. Thus, the movement of the cover to enclose the coiling head 80 causes simultaneous energization of the motors 72 and 82, whereupon the capstan 70 advances the conductor 25 from the capstan 40 and the coiling head 80 coils up the conductor 25.

The tension created on the conductor 25 by the simultaneous operation of the capstan 70 and the coiling head 80 is sufficient to overcome the spring mechanism provided in the drum 50, in which case, the pulley 44, mounted on the sliding bracket 45, is drawn to its extreme left-hand position at the track 48. The coiling apparatus is started up in this manner with the pulley 20 latched in its lowermost position shown in Fig. 1. The tension in the core 10 between the reel 11 and the capstan 12 is regulated by braking the reel 11 against rotation and is sufficient to maintain the arm 115 of the switch 114 in its actuated position and hold the normally closed contact 133 thereof in the open position. The solenoid 113, which is provided for actuating the clamp 112, remains deenergized so long as the tension on the core 10 holds the contact 133 in the open position.

Upon the energization of the relay 184 which connects the motor 82 to the potential supply terminals 237—237, the normally open contact 183 is closed, thereby connecting the coil 181 of the relay 182 across the busses 130 and 131 in series with the normally open contact 187 of the relay 176. However, the relay 176 is arranged to have its coil 175 energized as soon as the busses 130 and 131 are energized and provided that the contact 178 of the push button 179 and the contact 180 of the switch 122 are in their normally closed positions. Therefore, the closure of the contact 183 energizes the coil 181, which in turn, closes the normally open contact 192 and connects the auto transformer 190 across the busses 130 and 131. The auto transformer 190 thereby is energized and supplies a predetermined potential across the primary winding 194 of the transformer 193, which transformer creates a high potential across the secondary winding 195 and, consequently, across the electrodes 55 and 67 and ground indicated generally at 126. Since the metallic conductor of the core 10 is connected to the ground at 126, the transformer 193 impresses a high potential across the insulating cover and metallic core 10 of the conductor 25 as it passes through the electrodes 55 and 67. The lamp 168 connected across the busses 130 and 131 in series with the normally closed contact 167 indicates that the insulating cover of the conductor being taken up by the coiling head 80 does not contain any faults therein which provide paths of reduced dielectric strength between the electrodes 55 and 67 and the metallic conductor of the core 10 which is grounded at 126.

When the motor 72 is energized to drive the capstan 70, the counter 86 also is driven by the motor 72 and records the footage of the conductor 25 being coiled up by the coiling head 80. At the start of the coiling operation of the coiling head 80, the counting wheels 90—90 of the counter 86 were positioned so that the zero digit of each counting wheel was positioned directly opposite the window of the counter, in which case, the cams 91 and 98 attached to the hundredths wheels were positioned as shown in Figs. 4 and 5, respectively. As the coiling head 80 continues to coil up the conductor, the cam 98 is advanced by the hundredths wheel 90 of the counter to such a position that it allows the con-

tact arm 152 to disengage the contacts 151—151 and engage the contacts 153—153. The coiling head continues to coil up the conductor 25 until the hundredths wheel has advanced the cam 91 so as to position the recess 92 directly under the roller 93 mounted on the end of the arm 94 (Fig. 4).

This position of the recess 92 permits the spring 95 to pull the arm 94 downwardly and actuate the normally open contact 155 of the switch 96 to its closed position. Closure of the contact 155 connects the coil 156 of the relay 142 across the busses 130 and 131 in series with the contact arm 148 which engages the contacts 150—150 of the clamp actuated switch 122. Energization of the coil 156 simultaneously closes its associated normally open contacts 141 and 146, in which position the contact 141 energizes the coil 140 of the relay 135 and the contact 145 energizes the coil 145 of the relay 138. Energization of the coil 140 closes the contact 134 and energizes the cutter solenoid 74 which in turn urges the knife 73 downwardly to sever the advancing conductor 25. Energization of the coil 145 closes the contact 137 which connects the solenoid 108 across the busses 130 and 131. Energization of the solenoid 108 serves to reset the counting wheels 90—90 of the counter 86 to their normal starting position, that is, the counting wheels 90—90 are turned until the zero digit of each wheel is positioned directly opposite the window of the counter. Energization of the coil 140 of the relay 135 opens the normally closed contact 191 ahead of the closure of the contact 134 and disconnects the auto transformer 190 from the busses 130 and 131 whereby the electrodes 55 and 67 of the testing apparatus 58 are deenergized before the conductor is severed by the knife 73. Energization of the coil 140 of the relay 135 also opens the normally open contact 207 which disconnects the coil 215 of the relay 184 from the busses 130 and 131. The deenergization of the coil 215 allows the contacts 242—242 to open and disconnect the motor 82 from the supply terminals 237—237, whereupon the coiling head 80 comes to a stop after the solenoid 74 is energized to actuate the knife 73.

While the energization of the coil 140 of the relay 135 serves to deenergize the motor 82 to bring the coiling head 80 to a stop, the deenergization of the motor 72 driving the capstan 70 is delayed for a predetermined period of time by virtue of the fact that the motor 234 of the timer is not energized until the closure of the contact 230 of the relay 135. The timer motor 234 turns the cam 233 until it closes the normally open contact 231 and thereby connects the coil 232 of the relay 222 across the busses 130 and 131. Energization of the coil 232 opens the normally closed contact 221 which disconnects the coil 218 of the relay 217 from the busses 130 and 131, whereupon the contacts 236—236 drop open and disconnect the motor 72 from the supply terminals 237—237. The timer 223 is adjusted to delay the deenergization of the motor 72 with respect to the deenergization of the motor 82 to permit the capstan 70 to advance a sufficient length of the conductor 25 through the tube 76 after the conductor has been severed with the knife 73 so that the leading end of the conductor 25 may be secured to the empty coiling head 84. When the timer completes its predetermined timing cycle, the motor 72 is deenergized, whereupon movement of the conductor 25 at the coiling head is terminated temporarily. During the period of time that the conductor 25 is not being coiled up, the spring mechanism of the drum 50 pulls the pulley 44 to the right and forms a reverse loop in a path of travel of the conductor 25 between the capstan 40 and the capstan 70.

The relay 135 is provided with a latching mechanism arranged to hold the contacts 134, 191, 207 and 230 in their actuated positions. The open contact 191 maintains an open circuit to the auto transformer 190, and the open contact 207 maintains an open circuit to the coils 205 and 215 of the relays 186 and 184, respectively. Thus, by virtue of the latching-in mechanism of the relay 135, the coiling head remains inoperative until the cover 87 provided on the support 81 is moved from the full coiling head 80 to a position enclosing the coiling head 84. As the cover 87 passes through its mid position between the coiling heads it positions the contact arm 225 of the switch 201 in engagement with the contacts 202—202 while the arm 211 of the switch 200 remains in engagement with the contacts 203—203, whereby the reset coil 160 of the relay 135 is connected across the busses 130 and 131 through the contact arms 211 and 225. Energization of the reset coil 160 actuates the latching mechanism of the relay 135 and allows its contacts to resume their normal operating positions. When the cover 87 is positioned directly over the coiling head 84, the contact arms of the switches 200 and 201 assume their broken line positions shown in Fig. 10 of the wiring diagram, in which case, the circuit to the reset coils 160 and 172 is interrupted by the movement of the contact arm 211 to its position engaging the contacts 206—206 of the switch 200.

This movement of the contact arm 211, however, connects the coil 205 of the relay 186 across the busses 130 and 131 in series with the normally closed contact 207 of the relay 135 and the contacts of the push button 208. Energization of the coil 205 closes the contacts 240—240 which connects the motor 85 to the supply terminals 237—237. The motor 85 is thereby energized and rotates the coiling head 84 which coils up the conductor 25. The relay 217 is energized simultaneously with the energization of the relay 136, and connects the motor 72 to the terminals 237—237, whereupon the capstan 70 and the coiling head 84 cooperate to advance the conductor 25 from the capstan 40. The counter 86, which was reset to its normal starting position upon the energization of the relay 142 caused by the cam 91, records the footage of the conductor 25 being coiled up on the coiling head 84. Upon the release of the latching mechanism of the relay 135 by the movement of the cover 87 as described hereinabove, the high potential testing circuit to the electrodes 55 and 67 is energized again by the closure of the contact 191 provided on the relay 135.

The coiling head 84 continues to operate in the same manner as that described for the coiling head 80 until the cam 91 again is advanced by the hundredths wheel 90 until the recess 92 passes under the roller 93 and permits the arm 94 to actuate the switch 96 so that its normally open contact again energizes the coil 156 of the relay 142. Energization of the relay 142 in turn energizes the relays 135 and 138, which relays in turn energize the cutter solenoid 74 to sever the conductor 25, the solenoid 108 to reset the counter 86 to its normal starting position, deenergize the motor driving the coiling head 84, and energize the timer 223.

The leading end of the conductor 25 is attached to the empty coiling head 80 and when the cover 87 is moved to enclose the coiling head 80, the motor 82 is energized and the coiling head 80 again coils up the conductor 25 in the manner described. The coiling heads 80 and 84 continue to alternately coil up the conductor 25 into coils having a predetermined footage per coil, which footage is determined, in each case, by the cam 91 operated by the counter 86 so long as the core 10 is being withdrawn either from the reel 11 or the reel 110. When it is necessary to switch over from the reel 11 to the reel 110, or vice versa, the position of the cam 98 in the counter when the clamp 112 is actuated for the purpose of making the switchover determines whether the conductor is to be severed by the knife 73 and the coiling operation terminated at the time the connection is made between the cores or the operation of the knife and the termination of the coiling operation is to be delayed until an additional footage of the conductor 25 as determined by the cam 91 has been added to the coil. When it appears that the reel 11 is about to be exhausted of the core 10, the pulley 20 is unlatched and the braking force applied to the reel 11 is reduced so that the weight connected to the pulley overcomes the tension in the core and pulls the pulley to its uppermost position on the cutover tower 18. When the trailing end of the core 10 leaves the reel 11, the tension on the core 10 between the reel 11 and the capstan 12 is lost, whereupon the arm 115 of the runout switch 114 assumes its broken line position (Fig. 8). This movement of the arm 115 closes the contact 133 and connects the solenoid 113 across the busses 130 and 131. The energization of the solenoid 113 draws the arm 116 downwardly against the action of the tension spring 124 and rotates the shaft 117 so as to turn the shoe 120 in position to clamp the core 10 against the bottom of the groove provided in the sheave 16 of the cutover tower 18. This operation of the solenoid 113 and the clamp 112 prevents further movement of the trailing end of the core 10 so that it may be connected to the leading end of a core wound on the supply reel 110. While the connection is being made, the capstans 12 and 40 continue to rotate in their respective directions, in which case, the capstan 12 creates a tension in the core 10 between the clamp 112 and the capstan 12 sufficient to overcome the weight holding the pulley 20 at the top of the cutover tower and pulls the pulley 20 downwardly. This movement of the pulley 20 permits the continuous advancement of the core 10 and the conductor 25 through the vulcanizing and cooling apparatus to the coiling head in operation while the connection is being made.

As soon as the connection of the cores is completed, the core 10 then is positioned to actuate the arm 115 of the switch 114 to its full line position, whereupon the solenoid 113 is deenergized and the clamp 112 returns to its normal position releasing the core 10 so that it may be withdrawn from the supply reel 110. The connection between the ends of the cores passes through the extruding head 23 and has an insulating jacket extruded therearound the same as the core 10. The connection between the cores is not designed to provide continuity between the metallic cores in the conductor 25 and it is therefore necessary to prevent the connections from being included in coils taken up by the coiling heads 80 and 84. To prevent the splices from being included in the coils taken up by the coiling heads, the length of the path of travel of the core 10 and the conductor 25 from the clamp 112 to the knife 73 is made equal to the normal footage of the conductor 25 wound up on the coiling heads 80 and 84 determined by the cam 91.

Let it be assumed that the coiling head 80 is in operation at the time the core 10 is completely withdrawn from the supply reel 11 and the clamp 112 is actuated to hold the end of the core so that it may be connected to the core wound on the reel 110. If the coiling head 80 has coiled up a footage of the conductor 25 at this point which is greater than the minimum footage required per coil, the cam 91 has not been advanced a distance required to terminate a normal coil, but the cam 98 has been advanced by the counter 86 so that the lobe 100 is advanced beyond the roller 101 and the arm 102 moved downwardly by the spring 106 to actuate the contact arm 152 of the sensitive switch 105 so that it engages the contacts 153—153. When the contact arm 152 engages the contacts 153—153 and the clamp 112 is actuated due to the closure of the runout switch 115, the relay 142 is energized, which in turn, energizes the relay 135. The relay 135, when energized, closes its normally open contact 134, which in turn, energizes the solenoid 74 which actuates the knife to sever the conductor 25.

Energization of the relay 135 also opens the contacts 191 and 207 which deenergizes the motor 82 driving the coiling head 80 and the transformer 193 supplying the high potential to the electrodes 55 and 67 in the manner described for the termination of a normal coil by the cam 91. The leading end of the severed conductor 25 is connected to the coiling head 84 and the cover 87 positioned to enclose the coiling head 84 and place it in operation to coil up the conductor 25. When the connection, which was made between the cores while the clamp 112 was actuated, reaches the knife, the normal footage of the conductor required per coil has been coiled up by the coiling head 80 and the cam 91 on the counter initiates a series of operations of the electrical apparatus in the sequence described above to sever the conductor 25 and terminate the coiling operation of the coiling head 84. Since the conductor 25 was severed close to the connection formed between the cores of the conductor, it is a relatively simple matter for an operator to examine the leading end of the conductor 25 and determine the position of the connection so that it may be cut out before a subsequent coiling operation is initiated on the coiling head 80.

Assuming that the coiling head 80 is in operation at the time the core 10 is withdrawn from the reel 11 as described above, let it be further assumed that when the runout switch energizes the solenoid 113 to actuate the clamp 112, the coiling head 80 has coiled up a footage of the conductor 25 which is less than the minimum footage of conductor required per coil. When this condition exists, the cam 91 has not been turned an amount sufficient to terminate a normal coil and the cam 98 has not been turned sufficiently to advance the lobe 100 beyond the roller 101, in which case, the contact arm 152 remains in engagement with the contacts 151—151 of the switch 105. Since the contact arm 152 remains in engagement with the contacts 151—151, only the coil 145 of the relay 138 is

connected across the busses 130 and 131 when the contact arm 143 of the switch 122 is actuated by the clamp 112 to engage its contacts 147—147. Energization of the coil 145 closes the contact 137 which connects the solenoid 108 across the busses 130 and 131. The solenoid 108 is energized thereby and resets the counting wheels 90—90 and the cams 91 and 98 of the counter 86 to their normal starting positions. Since the relay 135 is not energized when the clamp 112 is actuated under these conditions, the coiling head 80 continues to coil up the conductor 25 and operate by the counter 86. Since the reset counter was reset when the clamp 112 was actuated, the normal footage of the conductor 25 must be added to the footage already coiled up on the coiling head 80 before the cam 91 again is advanced sufficiently to sever the conductor and terminate the coiling operation in the manner described. The connection made between the cores while the clamp was in its actuated position will reach a point adjacent to the knife 73 when the knife 73 is actuated to sever the conductor 25, because the coiling head 80, in coiling up the additional normal footage of the conductor will advance the connection to this point by the time the cam 91 allows the contact 155 to close. Due to the position of the splice it may be readily cut out of the conductor 25 before a subsequent coiling operation of the conductor is initiated.

When the core 10 runs out under these conditions, the footage of the conductor 25 coiled up by the coiling head 80 before it is terminated by the cam 91, contains the normal footage plus that footage of the conductor which had been coiled up by the coiling head 80 at the time the connection was made between the cores. However, the total footage coiled up by the coiling head 80 is within the maximum footage permitted per coil due to the arrangement of the cams 91 and 98 on the counter 86. That is, if the coiling head in operation has coiled up a footage in excess of the minimum footage allowed per coil, the conductor is severed and the coiling operation terminated when the clamp 112 is actuated, whereas, if the coiling head has coiled up less than the minimum footage required per coil, the coiling operation is not terminated until the normal footage has been added to the coil in process.

For the purpose of illustrating the invention more clearly, let it be assumed that the normal coils to be coiled up by the coiling heads 80 and 84 shall contain 800 feet of the conductor 25, that the maximum footage of the conductor 25 per coil shall not exceed 1000 feet and that the minimum footage per coil shall not be less than 200 feet of the conductor 25. Since the normal coils are to contain 800 feet of the conductor 25, it is necessary to provide a path of travel for the core 10 and the conductor 25 through the apparatus so that the length of the conductor between the clamp 112, adjacent to the cutover tower 18, and the knife 73 adjacent to the coiling heads will be 800 feet. The cam 91 is secured to the hundredths wheel of the counter so that the recess 92 will pass under the roller 93 provided on the arm 94 as the hundredths wheel is advanced to bring the digit "8" directly in line with the window of the counter. The recess 92 allows the arm to momentarily close the contact 155 of the switch 96, which sets up a series of operations of the electrical apparatus which sever the conductor and terminate the coiling operation. The cam 91, therefore, determines the normal footage of the conductor to be wound on the coiling heads 80 and 84.

To prevent the coil from containing less than the minimum footage or more than maximum footage of the conductor 25, the cam 98 is positioned on the hundredths wheel 90 of the counter 86 so that the lobe 100 remains in engagement with the roller 101 mounted on the arm 102 while the coiling head in operation is coiling up the first 200 feet of the conductor 25. The cam 98 is so arranged that when the counter indicates that 200 feet of the conductor 25 has been coiled up by the coiling head in operation, the lobe 100 has been advanced beyond the roller 101, whereupon the spring 106 causes the arm 102 to actuate the arm 152 of the switch 105 so that the contact arm 108 is disengaged from the contacts 151—151 and engages the contacts 153—153. The coiling head in operation continues to operate with the switch 105 in this position until 800 feet of the conductor has been coiled up, at which point the lobe 92 of the cam 91 passes under the roller 93 and allows the arm 94 to close the contact 155 of the switch 96, which effects the subsequent energization of the relays 142 and 135, and the solenoid 74 to sever the conductor and terminate the coiling operation. As long as the core 10 is being withdrawn from either of the supply reels 11 or 110, the cam 98 does not play any part in the termination of the 800 foot coils wound on the coiling heads, as each 800 foot coil is terminated by the cam 91 as stated hereinabove. The coiling heads 80 and 84 alternately coil up 800 foot coils until it is necessary to connect the trailing end of the core being withdrawn from an empty reel to the leading end of the core wound on the full reel.

Let it be assumed that the core 10 is being withdrawn from the supply reel 11 and that the coiling head 80 is coiling up the conductor 25 when it becomes necessary to connect the core 10 on the supply reel 110 so as to maintain continuous coiling of the conductor. Let it further be assumed that the coiling head 80 has coiled up less than 200 feet of the conductor 25 when the core 10 leaves the reel 11 and the solenoid 113 actuates the clamp 112 to prevent further movement of the trailing end of the core 10. Under these conditions, the lobe 100 still engages the roller 101 and holds the arm out of engagement with the operating button of the switch 105, thereby leaving the contact arm 152 in engagement with the contacts 151—151. Since the position of the cam 98 prevents actuation of the contact 155, the actuation of the clamp 112 merely moves the contact arm 143 into engagement with the contacts 147—147 and thereby connects the coil 145 of the relay 138 across the busses 130 and 131. Energization of the coil 145 in turn energizes the solenoid 174 which resets the counter 86 to its starting position, in which case, the "0" digit of each counting wheel 90 is aligned with the window of the counter. Actuation of the clamp 112 also opens the normally closed contact 180 of the switch 122 which in turn disconnects the coil 175 of the time delay relay 176 from the busses. The time delay relay 176 is deenergized and in turn deenergizes the relay 132 which disconnects the auto transformer from the busses and thereby deenergizes the transformer 193 and consequently the electrodes 55 and 67 while the connection is being made.

The coiling head 80 continues to coil up the

conductor 25 while the clamp is actuated, whereby a substantial portion of the loop formed in the path of travel of the core 10 around the pulleys 16, 20 and 17 of the cutover tower is absorbed. When the connection between the cores is completed, the arm 115 is actuated to open the contact 133 and deenergize the solenoid 113, whereupon the clamp 112 is released and the capstan 12 withdraws the core from the reel 110. The apparatus is arranged to operate in this manner because a coil containing less than 800 feet is not a commercially acceptable length of conductor and if such coils were terminated each time a splice was made there would result a substantial waste of the conductor 25. Since the counter was reset to "0" by the actuation of the clamp 112, the coiling head 80 continues to coil up the conductor 25 until 800 feet of the conductor has been added to the coil which was on the coiling head 80 at the time the connection was made between the cores.

When the counter again registers 800 feet, the coiling operation is terminated and the conductor is severed so that the leading end of the conductor 25 may be attached to the coiling head 84 and the coiling head 84 placed in operation by the movement of the cover 87 as previously described. By arranging the path of travel of the conductor 25 so that 800 feet of the conductor is positioned between the clamp 112 and the knife 73 when the pulley 20 is in its uppermost position on the cutover tower, the connection between the cores reaches a position substantially adjacent to the knife when the counter registers 800 feet and the cam 91 causes the operation of the solenoid 74 which severs the conductor. While the coil on the coiling head 80 contains more than 800 feet of the conductor 25, it does not exceed the maximum footage of 1000 feet since the additional 800 feet were added to a coil on the coiling head which contained less than the 200 feet of the conductor 25. Since the conductor 25 is severed close to the connection it is a relatively simple matter to locate the connection and remove it from the conductor 25 before a subsequent coiling operation is initiated by the movement of the cover 87.

Now let it be assumed that the coiling head 80 has coiled up more than 200 feet of the conductor 25 when the end of the core is withdrawn from the reel 11 and the clamp 112 is actuated to clamp the core to the pulley 16 so that the core may be connected together as described. Since more than 200 feet of the conductor was coiled up before the clamp 112 was actuated to prevent further movement of the core 10, the addition of 800 feet to such a coil would produce a coil having a conductor footage exceeding the 1000 foot limit per coil. Under these conditions, the cam 98 has been advanced by the hundredths wheel of the counter so that the lobe 100 is disengaged from the roller 101 and the arm 102 is allowed to move downwardly and actuate the contact arm 152 of the switch 105 so that it disengages the contacts 151—151 and engages the contacts 153—153.

With the contact arm 152 of the switch 105, and the contact arm 148 of the switch 122 in their actuated positions, the operating coil 156 of the relay 142 is connected across the busses 130 and 131 in series with the contact arms 148 and 152. Energization of the coil 156 closes the normally open contacts 141 and 146, which in turn, energize the coil 140 of the relay 135 and the coil 145 of the relay 138, respectively. Energization of the relay 135 causes the solenoid 74 to sever the conductor 25 and the termination of the coiling operation while the energization of the relay 138 causes the solenoid 108 to reset the counter wheels 90—90 to their normal starting positions. Since the coil on the coiling head contains more than 200 feet of the conductor 25, the cam 98 is arranged to cause the conductor to be severed and the coiling operation terminates so that the next succeeding coiling operation will produce a normal 800 foot coil on the coiling head 84. When the subsequent coiling operation is initiated, the connections between the cores reaches a position adjacent to the knife 73 when the counter again registers 800 feet at which point the conductor is severed and the coiling operation terminated. Under these conditions, the splice again is located near the end of the completed coil or the leading end of the next coil and may be removed therefrom before a subsequent coiling operation is initiated.

The cams 91 and 98 are arranged on the counter 86 to produce coils on the coiling heads 80 and 84 which comply with the assumed requirements regarding the normal minimum and maximum footage of the conductor 25 to be wound on each coil. The cams are arranged to control the coiling heads through the electrical apparatus described so that they normally coil up 800 foot coils and to prevent the coiling of the conductor 25 into coils which contain less than 200 feet, or more than 1000 feet of the conductor per coil. Obviously, the assumed limits regarding the footage of the conductor to be wound on each coil by the coiling heads is used for purposes of illustrating the invention and may be varied to suit requirements dictated by other types of filamentary articles without departing from the spirit and scope of the invention.

By arranging the cams 91 and 98 in the manner described, the connections made between the cores are prevented from being included in the coils wound on the coiling heads because, in each instance, when a connection is made between the cores the conductor always will be severed at a point substantially close to the connection so that it may be removed from the conductor. To obtain this feature with any other assumed footage limits per coil, it is necessary to position in the path of travel of the conductor or other filamentary articles, a length of the filamentary article equal to the footage of the filamentary article to be coiled up in a normal coil. In this manner the connection between the filamentary articles always is adjacent to the knife at the time the filamentary article is severed, whereby it may be readily removed from the article.

In the preferred embodiment of the invention the pulley 20 is held at its lowermost position on the cutover tower 18 except when it is necessary to switch over from an exhausted supply reel to a full supply reel, and the path of travel of the conductor is 800 feet long only while the pulley is so positioned to assure that the connection between the conductors will be at the end of the coil. However, it is to be understood that the apparatus may be operated with the pulley 20 positioned at the top of the cutover tower at all times when the conductor is not gripped by the clamp 112 so that the length of the path of travel is normally 800 feet. When the clamp 112 is actuated so that a connection can be made between the conductors on the two supply reels, the pulley 20 moves downwardly until the connection is completed, and when the clamp is released the pulley moves upwardly again. The coiling appa-

ratus operates under this arrangement in the same manner as that described for the preferred embodiment of the invention to produce coils normally having 800 feet of the conductor, or coils having a minimum of 200 feet or a maximum of 1000 feet of the conductor.

What is claimed is:

1. The method of coiling filamentary articles into predetermined lengths, which comprises advancing a filamentary article from a supply thereof along a path of travel having a predetermined length, coiling the article into coils at the end of its path of travel, continuously measuring the footage of the article being coiled up, cutting the article at the end of its path of travel and terminating the coils in process when a predetermined measure of the article is coiled thereon, resetting the measuring means to its starting position each time the filamentary article is severed so that successive coils of equal length of the material will be coiled up, clamping the trailing end of the filamentary article against movement when the supply of the article is exhausted at the beginning of its path of travel so that an end of a like filamentary article from another supply thereof may be connected thereto, severing the filamentary article when the trailing end is clamped if a predetermined minimum footage of the filamentary article has been coiled up on the coil in process, and continuing to coil up the filamentary article on the coil in process until a footage of the article equal to the footage of the previous coils is added to said coil in process if said coil contains less than the predetermined minimum footage per coil when the said connection is made, whereby no coils are produced having less than a required minimum footage of the filamentary article per coil.

2. The method of coiling filamentary articles into predetermined lengths, which comprises continuously advancing a filamentary article from a supply thereof along a path of travel having a predetermined length, intermittently coiling the filamentary article at the end of its path of travel into coils each having a predetermined length of the filamentary article, clamping the trailing end of the filamentary article when said supply thereof is exhausted at the beginning of its path of travel so that it may be connected to an end of a like filamentary article from another supply thereof, forming a reverse loop in the path of travel of the conductor adjacent to the point at which the trailing end is clamped when the supply is exhausted in order to maintain a continuous supply of filamentary article to be coiled while said connection is being made, said loop being arranged to increase the length of the said path of travel so that it equals the said predetermined length of the coils, terminating the coil in process when said supply is exhausted if said coil contains a minimum footage of the filamentary article required per coil, continuing to coil the article on the coil in process until the said predetermined length of the previous coils is coiled thereon if the coil in process contains less than a minimum footage of the filamentary article required per coil, resetting the measuring means so that it begins another measuring period each time a connection is made between the filamentary articles in order that the said connection is advanced to the end of its path of travel when the filamentary article is severed, whereby the connection between the filamentary article always will be located at the end of a completed coil and may be readily removed therefrom.

3. The method of coiling a filamentary conductor having a metallic core surrounded by an insulating cover into predetermined lengths, which comprises advancing the conductor from a supply thereof along a path of travel having a length of 800 feet, passing the conductor through a pair of juxtaposed electrodes spacedly positioned along a path of travel of the conductor, forming a 200 foot loop in the path of travel in the conductor between the said electrodes, said electrodes being arranged to apply across the insulating cover and metallic core of the conductor a potential having an intensity to break down any faults therein providing paths of reduced dielectric strength between the electrode and metallic core of the conductor, passing the advancing conductor through a cutting device positioned at the end of the 800 foot path of travel of the conductor, coiling up the conductor at the end of its path of travel, continuously measuring the footage of the conductor being coiled up, simultaneously actuating the cutting device to sever the conductor and terminate the coil in process each time 800 feet of the filamentary conductor is coiled up, clamping the trailing end of the conductor against movement at the beginning of said path of travel when said supply is exhausted so that it may be connected to an end of a like conductor provided on another supply thereof in order to maintain a continuous supply of conductor to be coiled, deenergizing the high potential testing electrodes while the connection is being made between the conductors, forming a reverse loop in the path of travel of the conductor at a point adjacent to that at which the trailing end of the conductor is clamped to allow continuous coiling of the conductor while the said connection is being made, releasing the clamp so that the conductor provided on the second supply will be advanced along the predetermined path of travel and coiled up, said 200 foot loop formed between the path of travel of the conductor between the first-mentioned and second-mentioned electrodes being of such length that no portion of the conductor passes through both electrodes while they are deenergized.

4. The method of coiling a filamentary conductor having a metallic core surrounded by an insulating cover into coils of predetermined length, which comprises advancing such a conductor from a supply thereof along a predetermined path of travel, passing the conductor through a clamping device positioned at the beginning of its path of travel, passing the conductor through a cutting device positioned at the end of its path of travel, said path of travel of the conductor between the clamping device into the cutting device being a predetermined length, coiling up the conductor as it emerges from the cutting device, continuously measuring the number of the conductor being coiled up, simultaneously actuating the cutting device to sever the advancing conductor and terminate the coil in process each time 800 feet of the conductor is coiled up, actuating the clamping device to stop the end of the conductor at the beginning of said path of travel when the said supply is exhausted so that it may be connected to an end of a like conductor provided on another supply thereof in order to maintain a continuous supply of conductors to be coiled, actuating the cutting device to sever the conductor and terminate the coil in process when the end of the conductor is clamped if said coil contains at least 200 feet of the conductor, continuing to coil up the conductor on

the coil in process until 800 feet of conductor have been coiled thereon if said coil in process contains less than 200 feet of the conductor when the end of the conductor is clamped, resetting the measuring means to its starting position each time the end of the conductor is clamped, forming a reverse loop near the beginning of the path of the conductor being coiled up before the supply is exhausted to increase the length of its path of travel by such an amount that 800 feet of conductor is positioned between the clamping device and the cutting device, said path of travel being made 800 feet so that when the said connection between the conductors is advanced 800 feet it is positioned adjacent to the cutting device when the conductor is severed thereby leaving the connection positioned adjacent to the end of the completed coil so that it may be removed therefrom, and repeating the above steps in the order named to coil up the conductor into coils normally having 800 feet of the conductor, a minimum of 200 feet of conductor and a maximum of 1000 feet of conductor and in such a manner that the connection between the conductors is not included in a completed coil.

5. An apparatus for coiling filamentary conductors into predetermined lengths, which comprises means for continuously advancing a filamentary conductor from a supply thereof along a path of travel having a predetermined length, means for coiling up the filamentary conductor at the end of its path of travel, means for continuously measuring the footage of the filamentary conductor bing coiled up, means controlled by the footage measuring means for severing the filamentary conductor at the end of its path of travel into coils each having a predetermined length of the conductor, means for clamping the end of the filamentary conductor at the beginning of its path of travel when the supply thereof is exhausted so that it may be connected to an end of a like filamentary conductor from another supply thereof to maintain a continuous supply of filamentary conductor to be coiled up, means for resetting the measuring means to its starting position when the conductor is severed and when the clamping means is actuated, means controlled by the footage measuring means for causing the filamentary conductor to be severed to terminate the coil in process when the said supply is exhausted if said coil in process contains at least a predetermined minimum length of the conductor required per coil, and means controlled by the footage measuring means for preventing the filamentary conductor from being severed when the said supply is exhausted if said coil in process contains less than the predetermined minimum footage of the filamentary conductor until an additional length of the conductor determined by the footage measuring means is coiled thereon, whereby no coils are coiled on the coiling means having less than the minimum footage of the filamentary conductor required per coil.

6. An apparatus for coiling filamentary conductors into predetermined lengths, which comprises means for advancing a filamentary conductor from a supply thereof along a predetermined path of travel, means positioned at the end of the path of travel of the conductor for cutting the conductor, means positioned adjacent to the cutting means for coiling up the filamentary conductor, means driven by the coiling means for continuously measuring the footage of the filamentary conductor being coiled up, electrically operated means controlled by the measuring means for causing the cutting device to sever the conductor and terminate the coil in process when each coil contains a predetermined length of the conductor, means for automatically clamping the end of the filamentary conductor at the beginning of its path of travel when the supply thereof is exhausted so that the end may be connected to an end of a like filamentary conductor from another supply thereof, electrically-operated means controlled by the said measuring means for automatically causing the cutting device to terminate the coil in process when the said supply is exhausted if at least a predetermined minimum footage of the filamentary conductor has been wound on said coil in process, electrically-operated means controlled by the measuring means for rendering the cutting device inoperative when the said supply is exhausted if less than a predetermined minimum footage of the conductor is coiled up, whereby an additional footage of the conductor equal to the length of its path of travel is added to such coils before the conductor is severed to terminate the coil in process, means for resetting the measuring means to its starting position each time the clamping means is actuated so that the connection between the filamentary conductors will be positioned adjacent to the cutting device when the predetermined footage of filamentary conductor has been coiled up, whereby the filamentary conductor is severed so as to leave the connection between the conductors at the end of the completed coil from which it may be removed.

7. An apparatus for coiling filamentary articles into predetermined lengths, which comprises means for advancing a filamentary article from a supply source of a given length along a path of travel having a predetermined length, means for coiling up the filamentary article at the end of its path of travel, means for continuously measuring the footage of the filamentary article being coiled up, means controlled by the footage measuring means for cutting the conductor at the end of its path of travel to terminate the coil in process when a predetermined footage of the filamentary article is coiled up, a second means provided at the end of the path of travel of the filamentary article for coiling up the article after it is severed and the coil in process is terminated to maintain substantially continuous coiling of the article, means for automatically resetting the footage measuring means to its normal starting position each time the cutting means is actuated so that the article will be severed to produce successive coils each having the said predetermined footage of the article, means positioned adjacent to the beginning of said path of travel of the filamentary article for clamping the trailing end of the article when the supply thereof is exhausted so that said trailing end may be connected to an end of a filamentary article provided on another supply thereof, means controlled by the footage measuring means for causing the cutting device to sever the filamentary article and terminate the coil when the supply is exhausted if said coil in process contains at least a minimum predetermined footage of the filamentary article required per coil to prevent coiling up a filamentary article in excess of the maximum footage allowed per coil, a second means provided on the footage measuring means for rendering the cutting device inoperative if the coil in process contains less than the minimum footage of the filamentary article allowed per coil when the supply is exhausted to pre-

vent coiling up less than the minimum footage of the filamentary article allowed per coil, and means for making the path of travel of the article equal to the predetermined footage determined by the measuring means each time the clamping means is actuated so that the connection between the articles always is located at the cutting means when the article is severed, whereby the connection may be readily removed from the end of the coil on the end of the leading end of the article.

8. An apparatus for coiling filamentary articles into predetermined lengths, which comprises means for advancing the filamentary article from a supply thereof along a predetermined path of travel, means for coiling up the filamentary article at the end of its path of travel, means for continuously measuring the footage of the filamentary article being coiled up, means controlled by the footage measuring means for cutting the filamentary article at the coiling means to terminate the coil in process each time a predetermined footage of the filamentary article is coiled up, means for clamping the trailing end of the filamentary article at the beginning of its path of travel when the supply thereof is exhausted so that it may be connected to another filamentary article provided on a second supply source, means for increasing the length of the path of travel of the filamentary article before the clamping means is actuated by a footage sufficient to allow the filamentary article to be coiled up while the connection is being made between the articles, said means for increasing the path of travel being arranged to make the path of travel of the article equal to the length of the article wound into coils as determined by the measuring means, electrically-operated means controlled by the footage measuring means for causing the cutting means to sever the article and terminate the coil in process when said supply is exhausted if a minimum footage of the filamentary article has been coiled up on said coil in process, a second electrically-operated means controlled by the measuring means for rendering the cutting device inoperative when the said supply is exhausted if said coil in process contains less than the minimum footage of the article so that an additional predetermined footage of the article is added to such coils before the article is severed, electrically-operated means for resetting the footage measuring means to its starting position simultaneously with the operation of the clamping means and the cutting device, whereby when the connection between filamentary article advances to the end of the path of travel the predetermined footage necessary to affect the operation of the cutting device has been coiled up on the coiling means and the article is severed when the connection is substantially close to the end of the completed coil from which position it may be readily removed.

9. An apparatus for coiling a filamentary conductor having a metallic core surrounded by an insulating cover into predetermined lengths, which comprises means for guiding a filamentary conductor from a supply thereof along a predetermined path of travel, means for continuously advancing the conductor from a supply source to an intermediate point, a second means for advancing the conductor from the intermediate advancing means to the end of its path of travel, said path of travel of the conductor from its supply source to the second advancing means having a predetermined length, means positioned adjacent to the second advancing means for coiling up the filamentary conductor, a second means for coiling up the filamentary conductor when the coil in process is terminated to maintain substantially continuous coiling of the conductor, means positioned between the coiling means and the second advancing means for cutting the advancing conductor, means driven by the coiling means for measuring the footage of the filamentary conductor being coiled up, means designed to be electrically energized for actuating the cutting device, means controlled by the footage measuring means for causing the electrically-operated means to actuate the cutting device and sever the conductor when a predetermined footage of the conductor is coiled up, electrically-operated means energized simultaneously with the operation of the cutting device for resetting the measuring means to its starting position each time the cutting device is actuated so that successive coils of said predetermined length are produced at the coiling means, means for automatically clamping the trailing end of the filamentary conductor at the beginning of said path of travel against movement when the supply thereof is exhausted so that it may be connected to an end of a filamentary conductor provided on another supply thereof and for releasing the clamping means to permit the advancing means to withdraw the filamentary conductor from the second-mentioned supply when the connection between the conductor is completed, electrically-operated means controlled by the footage measuring means for causing the cutting device to sever the conductor and terminate the coil in process if said coil contains a minimum footage of the conductor when the said supply is exhausted, a second electrically-operated means controlled by the footage measuring means for rendering the cutting device inoperative when the supply is exhausted if said coil in process contains less than the minimum footage of the filamentary conductor, means for increasing the length of the path of travel of the conductor between the clamping means and the intermediate advancing means before the first-mentioned supply is exhausted to permit the conductor to be coiled while the connection is being made between the conductors, said means for increasing the length of the path of travel being arranged to make the path of travel of the conductor equal to the predetermined footage per coil when the clamping means is actuated so that the connection between the filamentary conductors is advanced to the end of the path of travel of the conductor when the conductor is severed by operation of the measuring means, said increase in the path of travel of the conductor thereby leaving the connection at the end of the completed coil from which it may be readily removed, means for deenergizing the second advancing means for a predetermined period of time after the conductor has been severed and the coiling operation terminated by the footage measuring means so that the end of the conductor may be attached to the second coiling means, and means provided in the path of travel of the conductor between the second-mentioned advancing means and the coiling means to permit continuous movement of the filamentary conductor along the path of travel therebetween while the end of the conductor is connected to the second coiling means.

10. An apparatus for coiling a filamentary conductor having a metallic core surrounded by an insulating cover into coils of predetermined

lengths, which comprises means for advancing such a conductor from a supply source of a given length along a path of travel having a predetermined length, means for severing the advancing conductor at the end of its path of travel, means for coiling up the advancing conductor at the end of its path of travel, means for continuously measuring the footage of the conductor being coiled up, means controlled by the footage measuring means for actuating the cutting device to sever the conductor and terminate the coil in process each time 800 feet of the conductor is coiled up, means for clamping the end of the conductor at the beginning of its path of travel when said supply thereof is exhausted so that it may be connected to an end of a conductor provided on a second supply thereof to maintain a continuous supply of conductor to be coiled, means controlled by the measuring means for causing the cutting means to sever the conductor and terminate the coiling operation when the supply is exhausted if the coil in process contains at least 200 feet of the conductor, a second means controlled by the footage measuring means for preventing the cutting device from operating to sever the conductor when the said supply of the conductor is exhausted if the coil in process contains less than 200 feet of the conductor until an additional 800 feet of the conductor is added to such coils before the conductor is severed and the coiling operation terminated, means controlled jointly by the cutting device and the clamping means for resetting the measuring means to its starting position each time the end of the conductor is clamped at the beginning of its path of travel or severed at the end of its path of travel, means for increasing the length of the path of travel of the conductor before a supply thereof is exhausted by such an amount that the path of travel between the clamping means and the cutting device equals 800 feet, said 800 feet being the normal footage of the filamentary conductor wound on each coil as determined by the footage measuring means, said path of travel being made 800 feet in length so that each time a connection between conductors reaches the cutting device 800 feet of the conductor has been coiled up and the conductor will be severed and the coil in process terminated thereby leaving the connection at the end of the completed coil from which it may be readily removed, and repeating the above steps in the order named to coil up the conductor into coils normally having 800 feet of the conductor a minimum of 200 feet and a maximum of 1000 feet of the conductor.

11. The method of coiling filamentary articles into predetermined lengths, which comprises advancing a filamentary article from a supply thereof along a predetermined path of travel, normally coiling the article at the end of its path of travel into coils each having a predetermined length, terminating the coil in process when said supply is exhausted and said coil has at least a predetermined minimum length, and continuing the coil in process when said supply is exhausted and the coil has less than the predetermined minimum length until the coil has increased an additional predetermined length.

12. The method of coiling filamentary articles into predetermined lengths, which comprises continuously advancing a filamenary article from a supply thereof along a predetermined path of travel, normally coiling the filamentary article at the end of its path of travel into coils each having a predetermined length, terminating the coil in process when said supply is exhausted at the beginning of said path of travel and said coil has at least a predetermined minimum length, and continuing the coil in process when said supply is exhausted and the coil has less than the predetermined minimum length until an additional length of the article equal to the length of a normal coil is coiled thereon.

13. The method of coiling filamentary materials into predetermined lengths, which comprises continuously advancing a filamentary material from a supply thereof along a predetermined path of travel, normally coiling the filamentary material at the end of its path of travel into coils each having a predetermined length until the supply thereof is exhausted at the beginning of said path of travel, connecting the trailing end of the filamentary material when said supply thereof is exhausted at the beginning of said path of travel to an end of another supply of like filamentary material to maintain a continuous supply of a filamentary material to be coiled, terminating the coil in process when said first-mentioned supply is exhausted and said coil contains at least a predetermined length of the material, and continuing the coil in process when said first-mentioned supply is exhausted and the coil contains less than the predetermined minimum length of the material until an additional predetermined length of the material is coiled thereon.

14. The method of coiling filamentary materials into predetermined lengths, which comprises continuously advancing a filamentary material from its supply thereof along a predetermined path of travel, normally coiling the filamentary material at the end of its path of travel into coils each having a predetermined length of the material until the supply thereof is exhausted, connecting the trailing end of the filamentary material when said supply thereof is exhausted at the beginning of said path of travel to an end of another supply of like filamentary material to maintain a continuous supply of a filamentary material to be coiled, terminating the coil in process when said first-mentioned supply is exhausted and said coil contains a predetermined minimum length of the material, and continuing the coil in process when siad first-mentioned supply is exhausted and the coil contains less than a predetermined minimum length of the material until an additional predetermined length of material equal to the length of a normal coil is coiled thereon.

15. The method of coiling filamentary material into predetermined lengths, which comprises continuously advancing a filamentary material from a supply thereof along a predetermined path of travel, coiling the filamentary material at the end of its path of travel into coils each having a predetermined length of the material, connecting the trailing end of the filamentary material when said supply thereof is exhausted at the beginning of said path of travel to an end of another supply of like filamentary material to maintain a continuous supply of filamentary material to be coiled into coils, and terminating the coil in process when said first-mentioned supply is exhausted only when said coil contains at least a predetermined minimum length of the material.

16. The method of coiling filamentary material into predetermined lengths, which comprises continuously advancing a filamentary material from a supply thereof along a predetermined path of travel, coiling the filamentary material

at the end of its path of travel into coils each having a predetermined length of the material, connecting the trailing end of the filamentary material when said supply is exhausted at the beginning of said path of travel to an end of another supply of like filamentary material to maintain a continuous supply of filamentary material to be coiled into coils, and continuing to coil an additional predetermined length of the filamentary material on the coil in process when said first-mentioned supply is exhausted and said coil in process contains less than a predetermined minimum length of the material.

17. The method of coiling conductors into predetermined lengths, which comprises continuously advancing a conductor from a supply thereof along a predetermined path of travel, normally coiling the conductor at the end of its path of travel into coils each having a predetermined length until the supply source of the conductor is exhausted at the beginning of said path of travel, clamping the trailing end of the conductor from the supply source when it is exhausted, connecting to said clamped end an end of a like conductor from another supply thereof to maintain a continuous supply of conductor to be coiled into coils, terminating the coil in process when the connection is made between the conductors and said coil contains at least the predetermined minimum length of conductor required per coil, and continuing the coil in process when said connection is made and the coil in process contains less than the predetermined minimum length of conductor required per coil until a length of the conductor equal to the length of a normal coil is wound thereon.

18. The method of coiling conductors into predetermined lengths, which comprises continuously advancing a conductor from a supply thereof along a predetermined path of travel, coiling the conductor into coils at the end of its path of travel, severing the conductor each time a predetermined length of the conductor is coiled into a coil until the supply of the conductor is exhausted at the beginning of said path of travel, connecting the trailing end of the conductor of an exhausted supply to an end of a like conductor from another supply thereof to maintain a continuous supply of conductor to be coiled into coils, severing the conductor to terminate the coil in process when the first-mentioned supply is exhausted and said coil contains at least the predetermined minimum length of conductor required per coil, and continuing the coil in process when said first-mentioned supply is exhausted and said coil contains less than the predetermined minimum length of conductor until a length of the conductor equal to the length of the normal coils is coiled thereon.

19. The method of coiling filamentary conductors into predetermined lengths, which comprises continuously advancing a filamentary conductor from a supply thereof along a predetermined path of travel, coiling the filamentary conductor into coils at the end of its path of travel, normally severing the filamentary conductor each time a predetermined footage of the conductor is coiled into a coil until the supply of the conductor is exhausted at the beginning of said path of travel, clamping the trailing end of the filamentary conductor when its supply is exhausted at the beginning of its path of travel, connecting to said clamped end an end of a like filamentary conductor from another supply thereof to maintain a continuous supply of filamentary conductor to be coiled, severing the filamentary conductor when the trailing end of the first-mentioned supply is clamped and the coil in process contains at least a predetermined minimum length of the conductor, and continuing the coil in process when the trailing end of the first-mentioned supply is clamped and said coil contains less than a predetermined minimum length of the conductor until a length of the conductor equal to the length of a normal coil is coiled on said coil.

20. An apparatus for coiling filamentary articles into predetermined lengths, which comprises means for continuously advancing a filamentary material from a supply thereof along a predetermined path of travel, means for normally coiling the filamentary material at the end of its path of travel into coils each having a predetermined length, means for terminating the coil in process when the supply of the material is exhausted and said coil has at least a predetermined minimum length, and means for continuing the coil in process when said supply is exhausted and said coil has less than the predetermined minimum length until an additional predetermined length of the material is coiled thereon.

21. An apparatus for coiling a filamentary material into predetermined lengths, which comprises means for continuously advancing a filamentary material from a supply thereof along a predetermined path of travel, means for normally coiling the filamentary material at the end of its path of travel into coils each having a predetermined length of the material until the supply thereof is exhausted, means for terminating the coil in process when the supply of the material is exhausted at the beginning of said path of travel and said coil contains at least a predetermined minimum length of the material, and means for continuing the coil in process when the supply thereof is exhausted and said coil contains less than a predetermined minimum length of the material until an additional length of the material equal to the length of a normal coil is coiled thereon.

22. An apparatus for coiling filamentary articles into predetermined lengths, which comprises means for continuously advancing a filamentary article from a supply thereof along a predetermined path of travel, means for normally coiling the filamentary article at the end of its paths of travel into coils each having a predetermined length of the article, means for stopping only the trailing end of the filamentary article from an exhausted supply at the beginning of its path of travel so that it may be connected to an end of a like filamentary article from another supply thereof to maintain a continuous supply of the filamentary article to the coiling means, means for terminating the coil in process on the coiling means when said first-mentioned supply is exhausted and said coil contains at least a predetermined minimum length of the article required per coil, and means for continuing the coil in process when the said first-mentioned supply of the article is exhausted and said coil contains less than a minimum length of the article until a length of the filamentary article equal to the length of a normal coil is coiled thereon.

23. An apparatus for coiling filamentary conductors into predetermined lengths, which comprises means for continuously advancing a filamentary conductor from a supply thereof along a predetermined path of travel, means for coiling the filamentary conductor into coils at the end of its path of travel, means for normally

severing the conductor and terminating the coil in process each time a predetermined length of the conductor is coiled into a coil until the supply of the conductor is exhausted at the beginning of said path of travel, means for clamping the trailing end of the conductor when said supply thereof is exhausted so that it may be connected to another filamentary conductor of a second supply source to maintain a continuous supply of the conductor to be coiled, means for terminating the coil in process when the first-mentioned supply is exhausted and said coil in process contains at least a predetermined minimum length of the filamentary conductor, and means for continuing the coil in process when the first-mentioned supply thereof is exhausted and the coil in process contains less than a predetermined minimum length of the conductor until a length of the conductor equal to the length of a normal coil is coiled thereon.

24. The method of coiling a filamentary material into predetermined lengths, which comprises advancing the material from a supply along a

path of travel having a predetermined length, normally coiling the material into coils at the end of the path of travel each having a length equal to that of said path of travel, starting a new coil when the supply thereof is exhausted and the coil being wound contains more than the predetermined minimum length of material, and continuing the coil being wound when the supply is exhausted and the coil contains less than said minimum length of material.

GEORGE E. HENNING.
CHARLES J. O'LEARY.

REFERENCES CITED

The following references are of record in the file of this patent:

UNITED STATES PATENTS

Number	Name	Date
1,657,308	Jespersen	Jan. 24, 1928
1,904,869	Latsen	Apr. 18, 1933
1,977,697	Rockwood	Oct. 23, 1934
2,122,468	Hill	July 5, 1938