(12) INTERNATIONAL APPLICATION PUBLISHED UNDER THE PATENT COOPERATION TREATY (PCT)

(19) World Intellectual Property Organization
International Bureau

(43) International Publication Date
12 August 2010 (12.08.2010)

PCT

(10) International Publication Number
WO 2010/090599 A1

(51) International Patent Classification:
G02B 6/12 (2006.01) *G01N 21/25* (2006.01)
G02B 6/00 (2006.01)

(21) International Application Number:
PCT/SG2010/000035

(22) International Filing Date:
3 February 2010 (03.02.2010)

(25) Filing Language: English

(26) Publication Language: English

(30) Priority Data:

200900739-4	3 February 2009 (03.02.2009)	SG
12/364,575	3 February 2009 (03.02.2009)	US
09151931.4	3 February 2009 (03.02.2009)	EP

(71) Applicant *(for all designated States except US)*: **NITTO DENKO CORPORATION** [JP/JP]; 1-1-2 Shimohozumi, Ibaraki, Osaka 567-8680 (JP).

(72) Inventors; and
(75) Inventors/Applicants *(for US only)*: **LAO, Ieng Kin** [PT/SG]; Nitto Denko Asia Technical Centre Pte Ltd, 3 Fusionopolis Way, #05-21 Symbiosis, Singapore 138633 (SG). **THAVEEPRUNGSRIPORN, Visit** [TH/TH]; 822/123 Sukhumvit 55, Bangkok, 10110 (TH).

(74) Agent: **GOH, Su Lin, Audrey**; Viering, Jentschura & Partner LLP, P.O. Box 1088, Rochor Post Office, Rochor Road, Singapore 911833 (SG).

(81) Designated States *(unless otherwise indicated, for every kind of national protection available)*: AE, AG, AL, AM, AO, AT, AU, AZ, BA, BB, BG, BH, BR, BW, BY, BZ, CA, CH, CL, CN, CO, CR, CU, CZ, DE, DK, DM, DO, DZ, EC, EE, EG, ES, FI, GB, GD, GE, GH, GM, GT, HN, HR, HU, ID, IL, IN, IS, JP, KE, KG, KM, KN, KP, KR, KZ, LA, LC, LK, LR, LS, LT, LU, LY, MA, MD, ME, MG, MK, MN, MW, MX, MY, MZ, NA, NG, NI, NO, NZ, OM, PE, PG, PH, PL, PT, RO, RS, RU, SC, SD, SE, SG, SK, SL, SM, ST, SV, SY, TH, TJ, TM, TN, TR, TT, TZ, UA, UG, US, UZ, VC, VN, ZA, ZM, ZW.

(84) Designated States *(unless otherwise indicated, for every kind of regional protection available)*: ARIPO (BW, GH, GM, KE, LS, MW, MZ, NA, SD, SL, SZ, TZ, UG, ZM, ZW), Eurasian (AM, AZ, BY, KG, KZ, MD, RU, TJ, TM), European (AT, BE, BG, CH, CY, CZ, DE, DK, EE, ES, FI, FR, GB, GR, HR, HU, IE, IS, IT, LT, LU, LV, MC, MK, MT, NL, NO, PL, PT, RO, SE, SI, SK, SM, TR), OAPI (BF, BJ, CF, CG, CI, CM, GA, GN, GQ, GW, ML, MR, NE, SN, TD, TG).

Published:

— *with international search report (Art. 21(3))*

(54) Title: METHOD OF MANUFACTURING A MULTI -LAYER SENSOR STRUCTURE

Figure 1(a)

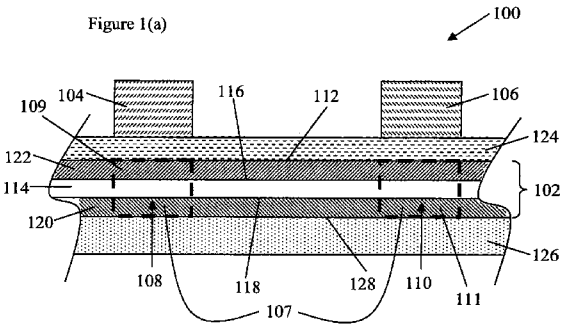

(57) Abstract: A method of manufacturing a multi-layer structure is provided. The method may include forming a waveguide on a substrate; forming a light coupling arrangement in the waveguide, wherein the light coupling arrangement is substantially non-wavelength selective; forming at least one light source above the waveguide; and forming at least one photo detector above the waveguide. The at least one light source, the at least one photo detector and the waveguide comprise organic material. The waveguide, the light coupling arrangement, the at least one light source and the at least one photo detector are monolithically integrated.

WO 2010/090599 A1

METHOD OF MANUFACTURING A MULTI -LAYER SENSOR STRUCTURE

Technical Field

[0001] Embodiments relate generally to a method of manufacturing a multi-layer structure.

Background

[0002] Generally, multi-layer structures are used for many various applications, e.g. implemented as sensors for physical and/or chemical and/or biological applications, etc. A conventional multi-layer structure usually includes various different components such as light sources, photo detectors, waveguides, etc.

[0003] Conventionally, inorganic materials are used for manufacturing the conventional multi-layer structures and also for manufacturing the light sources, the photo detectors and the waveguides. However, the conventional inorganic multi-layer structures may still have some limits on their performances.

Summary

[0004] In an embodiment, there is provided a method of manufacturing a multi-layer structure, the method including: forming a waveguide on a substrate; forming a light coupling arrangement in the waveguide, wherein the light coupling arrangement is substantially non-wavelength selective; forming at least one light source above the waveguide; and forming at least one photo detector above the waveguide; wherein the at least one light source, the at least one photo detector and the waveguide include organic

material, and wherein the waveguide, the light coupling arrangement, the at least one light source and the at least one photo detector are monolithically integrated.

Brief Description of the Drawings

[0005] In the drawings, like reference characters generally refer to the same parts throughout the different views. The drawings are not necessarily to scale, emphasis instead generally being placed upon illustrating the principles of the invention. In the following description, various embodiments of the invention are described with reference to the following drawings, in which:

[0006] Figure 1(a) shows a schematic diagram of a multi-layer structure according to an embodiment.

[0007] Figure 1(b) shows a schematic diagram of another embodiment of the multi-layer structure of Figure 1(a).

[0008] Figure 1(c) shows a schematic diagram of another embodiment of the multi-layer structure of Figure 1(a).

[0009] Figure 1(d) shows a schematic diagram of another embodiment of the multi-layer structure of Figure 1(a).

[0010] Figure 1(e) shows a schematic diagram of another embodiment of the multi-layer structure of Figure 1(a).

[0011] Figure 1(f) shows a schematic diagram of another embodiment of the multi-layer structure of Figure 1(d).

[0012] Figure 1(g) shows a schematic diagram of another embodiment of the multi-layer structure of Figure 1(a).

[0013] Figure 1(h) shows a schematic diagram of another embodiment of the multi-layer structure of Figure 1(d).

[0014] Figure 2 shows a schematic diagram of a light source of the multi-layer structure according to an embodiment.

[0015] Figure 3 shows a schematic diagram of a photo detector of the multi-layer structure according to an embodiment.

[0016] Figure 4 shows a flowchart of a process of manufacturing the multi-layer structure according to an embodiment.

[0017] Figure 5 shows a process of manufacturing the multi-layer structure of Figure 1(c) according to an embodiment.

[0018] Figure 6 shows a first process of manufacturing the light source and the photo detector according to an embodiment.

[0019] Figure 7 shows a second process of manufacturing the light source and the photo detector according to an embodiment.

[0020] Figure 8 shows a third process of manufacturing the light source and the photo detector according to an embodiment.

[0021] Figure 9 shows a flowchart of a process of manufacturing the waveguide according to an embodiment.

[0022] Figure 10 shows an example design of a refractive index gradient of the waveguide according to an embodiment.

[0023] Figure 11(a) shows a schematic diagram of the multi-layer structure implemented as e.g. a biosensor according to an embodiment.

[0024] Figure 11(b) shows a graph of intensity plotted against wavelength before antibody interacts with antigen according to an embodiment.

[0025] Figure 11(c) shows a schematic diagram of the antibody on the biosensor interacting with the antigen according to an embodiment.

[0026] Figure 11(d) shows a graph of intensity plotted against wavelength after the antibody interacts with the antigen according to an embodiment.

Detailed Description

[0027] Exemplary embodiments of a multi-layer structure, a method of manufacturing the multi-layer structure, a waveguide and a method of manufacturing the waveguide are described in detail below with reference to the accompanying figures. It will be appreciated that the exemplary embodiments described below can be modified in various aspects without changing the essence of the invention.

[0028] Figure 1(a) shows a schematic diagram of a multi-layer structure 100 according to an embodiment. The multi-layer structure 100 may include a waveguide 102, at least one light source 104 and at least one photo detector 106. For illustration purposes, only one light source 104 and one photo detector 106 are shown in Figure 1(a). In general, an arbitrary number of light sources 104 and photo detectors 106 may be provided monolithically integrated. By way of example, a plurality of light sources 104 and only one photo detector 106 may be provided. Alternatively, only one light source 104 and a plurality of photo detectors 106 may be provided. As another alternative embodiment, a plurality of light sources 104 and a plurality of photo detectors 106 may be provided monolithically integrated with one another. The waveguide 102 of the multi-

layer structure 100 may be a planar waveguide. The waveguide 102 of the multi-layer structure 100 may include a light coupling arrangement 107. The light source 104 and the photo detector 106 may be disposed above the waveguide 102. The waveguide 102, the light source 104 and the photo detector 106 may include organic material. The organic materials for the waveguide 102 may include but are not limited to Polyethylene, Polypropylene, PVC, Polystyrene, Nylon, Polyester, Acrylics, Polyurethane, Polycarbonate, epoxy-based polymers and fluorene derivative polymers. The organic materials for the light source 104 may include but are not limited to phenyl-substituted poly(p-phenylenevinylene) (Ph-PPV). The organic materials for the photo detector 106 may include but are not limited to poly(3-hexythiophene) : 1-(3-methoxycarbonyl)-propyl-1-phenyl-(6,6)C_{60} (P3HT:PCBM), C_{60}, ZnPC, and Pentacene. The waveguide 102, the light coupling arrangement 107, the light source 104 and the photo detector 106 may be monolithically integrated.

[0029] The light coupling arrangement 107 of the waveguide 102 may be substantially non-wavelength sensitive. The light coupling arrangement 107 may be substantially non-wavelength selective (in other words has an attenuation of the incoming optical signal that is negligible over a wide wavelength range, e.g. over the mentioned wavelength range(s)) in a wavelength range from 300 nm to 1700 nm.

[0030] To achieve non-wavelength selective light coupling, one of the methods is to generate refractive index (RI) gradient in the waveguide materials. On the basis of Snell's law ($n_1 \sin\theta_1 = n_2 \sin\theta_2$, where n_1 and n_2 are the refractive index for a first layer and a second layer respectively, θ_1 is the incident angle and θ_2 is refraction angle), the refraction angle of a light ray increases, and thus bending the light ray, when the light ray

passes from a layer with higher RI to another layer with lower RI. Therefore, the reflection angle for the light emitted from the light source 104 is changed gradually and continuously when the light passes through a region having a RI gradient. As a result, the light emitted from the light source 104 can be non-wavelength selectively coupled to the waveguide 102. Another approach to achieve non-wavelength selective light coupling is to modify the incident angle of the light ray emitted from the light source 104 to the light coupling arrangement 107, and/or of the light propagated in the light coupling arrangement 107 to the photo detector 108 in order to make the light ray satisfying total internal reflection, i.e. the incident angle θ_1 > critical angle θ_c. For example, this can be achieved through modifying the surface curvature of the interface between different materials having different refractive indexes, such as core and cladding materials, in the light coupling arrangement 107.

[0031] The light coupling arrangement 107 may include one or more first light coupling module 108 and one or more second light coupling module 110. For illustration purposes, only one first light coupling module 108 and one second light coupling module 110 are shown in Figure 1(a). The first light coupling module 108 may include a region 109 having a refractive index gradient and the second light coupling module 110 may include a region 111 having a refractive index gradient.

[0032] In one embodiment, as shown in Figure 1(a), the waveguide 102 may include one or more regions 109, 111 having the refractive index gradient. In another embodiment, the waveguide may include at least two regions 109, 111 having the refractive index gradient. The regions 109, 111 may be substantially non-wavelength selective (in other words has an attenuation of the incoming optical signal that is

negligible over a wide wavelength range, e.g. over the mentioned wavelength range(s)) in a wavelength range from 300 nm to 1700 nm. The regions 109, 111 may be configured to couple light between the waveguide 102 and at least one optical element, e.g. the light source 104 or the photo detector 106. The regions 109, 111 may be configured to change characteristics of light propagating in the waveguide 102. The changes in the characteristics of light propagating in the waveguide may include but are not limited to changes in light propagation direction, convergence of light, focusing of light, diffraction of light, divergence of light and diffusion of light. Each region 109, 111 having the refractive index gradient may be disposed below the respective optical element, e.g. the light source 104 or the photo detector 106. The waveguide may include but is not limited to organic material. The organic materials for the waveguide 102 may include but are not limited to Polyethylene, Polypropylene, PVC, Polystyrene, Nylon, Polyester, Acrylics, Polyurethane, Polycarbonate, epoxy-based polymers and fluorene derivative polymers. The regions 109, 111 may include but are not limited to polymer, electro-opto organic materials and thermal-opto organic materials.

[0033] Figure 9 shows a flowchart 900 of a process of manufacturing the waveguide 102. At 902, one or more regions having a refractive index gradient may be formed. At 904, a refractive index gradient of the one or more regions of the waveguide may be tuned.

[0034] The refractive index gradient of the regions 109, 111 of the waveguide 102 may be tuned by emitting laser light to the waveguide 102, e.g. by laser direct writing of the waveguide 102. The refractive index (RI) of the waveguide materials may decrease after the waveguide materials are exposed to laser. A decrease of the refractive index of

the waveguide materials may be proportional to the exposed energy dosage. A refractive index gradient can thus be generated by changing the exposed energy dosage from one direction to another direction along the regions 109, 111 of the waveguide 102, for example, from left to right or from bottom to top.

[0035] Figure 10 shows an example design of the refractive index gradient 1000 of the waveguide 102. The refractive index 1002 of the region 109 of the first light coupling module 108 may decrease from top to bottom. The refractive index 1004 of the region 111 of the second light coupling module 110 may decrease from left to right. Other designs of the refractive index gradient can also be used in other embodiments.

[0036] Further, the refractive index gradient of the regions 109, 111 may be tuned by distributing different amounts of e.g. metal ions or nanoparticles along the regions 109, 111. The refractive index gradient of the regions 109, 111 may also be tuned by changing a degree of e.g. polymer cross-linking along the regions 109, 111. The refractive index gradient of the regions 109, 111 may also be tuned by changing molecular bonding of e.g. polymer along the regions 109, 111. The refractive index gradient of the regions 109, 111 may also be tuned by generating an electric field across e.g. electro-opto materials along the regions 109, 111. The refractive index gradient of the regions 109, 111 may also be tuned by generating a temperature gradient across e.g. thermal-opto materials along the regions 109, 111.

[0037] Referring back to Figure 1(a), the light source 104 and the photo detector 106 may be disposed above a first surface 112 of the waveguide 102. The light source 104 and the photo detector 106 may be located at a distance from each other. In one embodiment, as shown in Figure 1(a), the light source 104 may be disposed adjacent to

the photo detector 106. The light source 104 may be disposed above the first light coupling module 108 and the photo detector 106 may be disposed above the second light coupling module 110. Further, the light source 104 and the photo detector 106 may also be arranged orthogonally to the waveguide 102.

[0038] In another embodiment, as shown in Figure 1(b), the light source 104 may be disposed adjacent to a further light source 104. The photo detector 106 may be disposed adjacent to the further light source 104. Each first light coupling module 108 may be disposed below the respective light source 104. The second light coupling module 110 may be disposed below the photo detector 106.

[0039] In another embodiment, as shown in Figure 1(c), the light source 104 may be disposed adjacent the photo detector 106. The photo detector 106 may be disposed adjacent to a further photo detector 106. The first light coupling module 108 may be disposed below the light source 104. Each second light coupling module 110 may be disposed below the respective photo detector 106.

[0040] The waveguide 102 of the multi-layer structure 100 may have a core layer 114 having a first surface 116 facing the light source 104 and the photo detector 106, and a second surface 118 facing away from the light source 104 and the photo detector 106. The waveguide 102 may have a first cladding layer 120 disposed on the second surface 118 of the core layer 114. The waveguide 102 may further include a second cladding layer 122 disposed on the first surface 116 of the core layer 114. In other words, the waveguide 102 may have a multilayer structure. The core layer 114, the first cladding layer 120 and the second cladding layer 122 may have a same size.

[0041] The core layer 114, the first cladding layer 120 and the second cladding layer 122 may include but are not limited to polymer materials such as e.g. Polyethylene, Polypropylene, PVC, Polystyrene, Nylon, Polyester, Acrylics, Polyurethane, Polycarbonate, epoxy-based polymers and fluorene derivative polymers. The core layer 114 may have a larger refractive index than the first cladding layer 120. The core layer 114 may have a larger refractive index than the second cladding layer 122.

[0042] The first light coupling module 108, including the region 109 having the refractive index gradient, of the light coupling arrangement 107 may be configured to couple the light source 104 to the waveguide 102. The first light coupling module 108, including the region 109 having the refractive index gradient, may be configured to direct light emitted from the light source 104 to the waveguide 102. The first light coupling module 108, including the region 109 having the refractive index gradient, may also be configured to change an incident angle of the light emitted from the light source 104 to be larger than a critical angle for effecting total internal reflection in the core layer 114 of the waveguide 102.

[0043] In one embodiment, the first light coupling module 108 may include one or more of a grating coupler, a mirror and a lens. In another embodiment, the first light coupling module 108 may be a planar optical structure. The planar optical structure may include one or more structures such as lens made by metamaterials, photonic crystals and nanophotonics. In yet another embodiment, the first light coupling module 108 may be a three dimensional optical structure. The three dimensional optical structure may include one or more of a 45° mirror, a micro cavity, a volume grating, holographic optics and nanophotonics. The first light coupling module 108 may include one or more polymer

materials, electro-opto organic materials, thermal-opto organic materials, metal oxides and metals.

[0044] The second light coupling module 110, including the region 111 having the refractive index gradient, of the light coupling arrangement 107 may be configured to couple the photo detector 106 to the waveguide 102. The second light coupling module 110, including the region 111 having the refractive index gradient, may be configured to direct light from the core layer 112 of the waveguide 102 to the photo detector 106.

[0045] In one embodiment, the second light coupling module 110 may include one or more of a grating coupler, a mirror and a lens. In another embodiment, the second light coupling module 110 may be a planar optical structure. The planar optical structure may include one or more structures such as lens made by metamaterials, photonic crystals and nanophotonics. In yet another embodiment, the second light coupling module 110 may be a three dimensional optical structure. The three dimensional optical structure may include one or more of a 45° mirror, a micro cavity, a volume grating, holographic optics and nanophotonics. The second light coupling module 110 may include one or more polymer materials, electro-opto organic materials, thermal-opto organic materials, metal oxides and metals.

[0046] In one embodiment, the first coupling module 108 and the second coupling module 110 may have the same structures. In another embodiment, the first coupling module 108 and the second coupling module 110 may have different structures.

[0047] The multi-layer structure 100 may further include a stacked layer 124 disposed on the first surface 112 of the waveguide 102. The stacked layer 124 may cover the first surface 112 of the waveguide 102. The stacked layer 124 may include one or

more of a barrier layer, an adhesion layer and a spacer. The multi-layer structure 100 may also include a substrate 126 disposed on a second surface 128 of the waveguide 102 facing away from the light source 104 and the photo detector 106. The stacked layer 124 may be formed to prevent damage to the waveguide 102 when forming the light source 104 and the photo detector 106.

[0048] Figure 1(d) shows a schematic diagram of another embodiment of the multi-layer structure 100 of Figure 1(a). In this embodiment, the stacked layer 124 may be disposed between the light source 104 and the first light coupling module 108. The stacked layer 124 may be formed to prevent damage to the waveguide 102 when forming the light source 104. A further stacked layer 130 may be disposed on the first surface 112 of the waveguide 102. The further stacked layer 130 may be disposed between the photo detector 106 and the second light coupling module 110. The further stacked layer 130 may include one or more of a barrier layer, an adhesion layer and a spacer. The further stacked layer 130 may be formed to prevent damage to the waveguide 102 when forming the photo detector 106. As shown in Figure 1(b), the stacked layer 124 and the further stacked layer 130 are located at a distance from one another (e.g. at two opposite ends of the waveguide 102).

[0049] Figure 1(e) shows a schematic diagram of another embodiment of the multi-layer structure 100 of Figure 1(a). Figure 1(f) shows a schematic diagram of another embodiment of the multi-layer structure 100 of Figure 1(d). In this embodiment, the core layer 114 may have a smaller size than the first cladding layer 120 and the second cladding layer 122. The core layer 114 may have a shorter length and/or width as compared to the first cladding layer 120 and the second cladding layer 122. Further, the

core layer 114 may have a same thickness as the first cladding layer 120 and the second cladding layer 122 in one embodiment. In another embodiment, the core layer 114 may have a different thickness as compared to the first cladding layer 120 and the second cladding layer 122. The second cladding layer 122 may cover the core layer 114. In other words, the core layer 114 may be enclosed by the first cladding layer 120 (from the bottom side) and the second cladding layer 122 (from the lateral sides and the top side).

[0050] In another embodiment, as shown in Figures 1(g) and 1(h), the core layer 114 may be enclosed by the first cladding layer 120 (from the bottom side and the lateral sides) and the second cladding layer 122 (from the top side).

[0051] The multi-layer structure 100 as described above may be an organic material based monolithically integrated optical board. The multi-layer structure 100 may be implemented for one or more of sensing, communication and data processing applications. The multi-layer structure 100 may be implemented for one or more of amplitude modulation detection, resonant frequency shift, frequency modulation detection, phase shifting modulation detection and polarization modulation detection. In one embodiment, the multi-layer structure 100 implemented for the various applications may have the same structures, materials, etc.

[0052] In some embodiments of the multi-layer structure 100, the stacked layer 124 and/or the further stacked layer 130 may not be included. In some embodiments of the multi-layer structure 100, the substrate 126 may not be included. In some embodiments of the multi-layer structure 100, the second cladding layer 122 may not be included. The second cladding layer 122 may not be included if the medium (e.g. ambient air) surrounding the core layer 114 has a lower refractive index than the core layer 114.

[0053] Figure 2 shows a schematic diagram of the light source 104 of the multi-layer structure 100 according to an embodiment. The light source 104 may be an organic light emitting diode or an organic laser. The light source 104 may include a transparent conductive electrode 202 disposed above the first surface 112 of the waveguide 102, in particular e.g. disposed on the upper surface of the stacked layer 124 or the upper surface of the second cladding layer 122 or the upper surface of the core layer 114, depending on the respective structure that is provided. The transparent conductive electrode 202 may have a thickness of about 120 nm. The transparent conductive electrode 202 may also have a thickness ranging from about 50 nm to about 1 μm. A layer of transparent conductive polymer 204 may be disposed on the transparent conductive electrode 202. The layer of transparent conductive polymer 204 may have a thickness of about 80 nm. A light emissive layer 206 may be disposed on the layer of transparent conductive polymer 204. The light emissive layer 206 may have a thickness of about 80 nm. The light emissive layer 206 may also have a thickness ranging from about 3 nm to about 300 nm. A layer of hole blocking or electron injection material 208 may be disposed on the light emissive layer 206. The layer of hole blocking or electron injection material 208 may have a thickness of about 1.5 nm. A layer of cathode interface material 210 may be disposed on the layer of hole blocking or electron injection material layer 208. The layer of cathode interface material 210 may have a thickness of about 5 nm. An electrical conductive electrode 212 may be disposed on the layer of cathode interface material 210. The electrical conductive electrode 212 may have a thickness of about 300 nm.

[0054] The transparent conductive electrode 202 of the light source 104 may include but is not limited to transparent conductive oxide. The transparent conductive electrode

202 may also include but is not limited to conductive metal oxide, conductive polymer and conductive metallic silicide on a condition that these materials are transparent for the light emitted from the light source 104. The light emissive layer 206 of the light source 104 may include one or more organic materials. The one or more organic materials of the light emissive layer 206 may include but are not limited to organic dye molecules and polymers. The light emissive layer 206 may include but is not limited to phenyl-substituted poly(p-phenylenevinylene) (Ph-PPV). The electrical conductive electrode 212 of the light source 104 may include but is not limited to cathode metal.

[0055] Figure 3 shows a schematic diagram of the photo detector 106 of the multi-layer structure 100 according to an embodiment. The photo detector 106 may be an organic photovoltaic cell. The photo detector 106 may include a transparent conductive electrode 302 disposed above the first surface 112 of the waveguide 102, in particular e.g. disposed on the upper surface of the stacked layer 124 or upper surface of the further stacked layer 130, the upper surface of the second cladding layer 122 or the upper surface of the core layer 114, depending on the respective structure that is provided. The transparent conductive electrode 302 may have a thickness of about 120 nm. A layer of transparent conductive polymer 304 may be disposed on the transparent conductive electrode 302. The layer of transparent conductive polymer 304 may have a thickness of about 40 nm. A photovoltaic layer 306 may be disposed on the layer of transparent conductive polymer 304. The photovoltaic layer 306 may have a thickness of about 80 nm. The photovoltaic layer 306 may also have a thickness ranging from about 3 nm to about 300 nm. A layer of cathode interface material 308 may be disposed on the photovoltaic layer 306. The layer of cathode interface material 308 may have a thickness

of about 5 nm. An electrical conductive electrode 310 may be disposed on the layer of cathode interface material 308. The electrical conductive electrode 310 may have a thickness of about 300 nm.

[0056] The transparent conductive electrode 302 of the photo detector 106 may include but is not limited to transparent conductive oxide. The transparent conductive electrode 302 may also include but is not limited to conductive metal oxide, conductive polymer and conductive metallic silicide on a condition that these materials are transparent for the light propagated in the waveguide 102. The photovoltaic layer 306 of the photo detector 106 may include one or more organic materials. The one or more organic materials of the photovoltaic layer 306 may include but are not limited to organic dye molecules and polymers. The photovoltaic layer 306 may also include but is not limited to poly(3-hexythiophene) : 1-(3-methoxycarbonyl)-propyl-1-phenyl-(6,6)C_{60} (P3HT:PCBM), C_{60}, ZnPC, and Pentacene. Further, the photovoltaic layer 306 may be a multilayer structure including e.g. ZnPC/C_{60}, Pentacene/ZnPC/Pentacene/C_{60}, forming multiple heterojunction cells. The electrical conductive electrode 310 of the photo detector 106 may include but is not limited to cathode metal.

[0057] Figure 4 shows a flowchart 400 of a process of manufacturing the multi-layer structure 100 according to an embodiment. At 402, a waveguide may be formed on a substrate. At 404, a light coupling arrangement may be formed in/on the waveguide. At 406, a light source may be formed above the waveguide. At 408, a photo detector may be formed above the waveguide. In another embodiment, the photo detector may be formed above the waveguide at 406 and the light source may be formed above the waveguide at 408.

[0058] Figure 5 shows a process of manufacturing the multi-layer structure 100 of Figure 1(e) according to an embodiment. The multi-layer structure 100 may be manufactured in a batch manner or in a roll-to-roll continuous manner.

[0059] Figure 5(a) shows a substrate 126. The substrate 126 may include but is not limited to silicon, glass, stainless steel foil, and plastics. The substrate 126 may be a multilayer substrate.

[0060] Figure 5(b) shows a first cladding layer 120 of a waveguide 102 formed on the substrate 126. The first cladding layer 120 may be formed by coating or printing the first cladding layer 120, soft baking the first cladding layer 120, exposing the first cladding layer 120 to ultraviolet light, and curing the first cladding layer 120. The first cladding layer 120 may have a thickness of about 5 μm. The first cladding layer 120 may include but is not limited to epoxy-based polymer.

[0061] Figure 5(c) shows a core layer 114 formed on the first cladding layer 120. The core layer 114 may be formed by coating or printing the core layer 114, soft baking the core layer 114, exposing the core layer 114 to ultraviolet light, and curing the core layer 114. The core layer 114 may have a thickness of about 5 μm. The core layer 114 may include but is not limited to epoxy-based polymer.

[0062] Figure 5(d) shows that the core layer 114 is etched, e.g. using a lithographic process and a corresponding patterning process. The core layer 114 may have a smaller size than the first cladding layer 120. The core layer 114 may have a shorter length and/or width than the first cladding layer 120. For example, the first cladding layer 120 may have a width ranging from about 4 mm to about 10 mm and a length ranging from about 10 mm to about 30 mm, while the core layer 114 may have a width of about 5 μm

and a length ranging from about 5 mm to about 20 mm. Further, the core layer 114 may have a same thickness as the first cladding layer 120 in one embodiment. For example, the core layer 114 may have a thickness of about 5 μm and the first cladding layer may have a thickness of about 5 μm. In another embodiment, the core layer 114 may have a different thickness as compared to the first cladding layer 120.

[0063] Figure 5(e) shows a second cladding layer 122 formed on the core layer 114. The second cladding layer 122 may be formed by coating or printing the second cladding layer 122, soft baking the second cladding layer 122, exposing the second cladding layer 122 to ultraviolet light, and curing the second cladding layer 122. The second cladding layer 122 may have a depth of about 5 μm for covering the core layer 114. The second cladding layer 122 may include but is not limited to epoxy-based polymer. The core layer 114 may have a smaller size than the second cladding layer 122. The core layer 114 may have a shorter length and/or width than the second cladding layer 122. For example, the second cladding layer 114 may have a width ranging from about 4 mm to 10 mm and a length ranging from about 10 mm to about 30 mm, while the core layer 114 may have a width of about 5 μm and a length ranging from about 5 mm to about 20 mm. Further, the core layer 114 may have a same thickness as the depth of the second cladding layer 122 in one embodiment. For example, the core layer 114 may have a thickness of about 5 μm and the second cladding layer may have a depth of about 5 μm. In another embodiment, the core layer 114 may have a different thickness as compared to the depth of the second cladding layer 122. The second cladding layer 122 may cover the core layer 114. In other words, the core layer 114 may be enclosed by the first cladding layer 120 (from the bottom side) and the second cladding layer 122 (from the lateral sides and the top side).

[0064] The core layer 114, the first cladding layer 120 and the second cladding layer 122 form the waveguide 102. The core layer 114, the first cladding layer 120 and the second cladding layer 122 of the waveguide 102 may also include but are not limited to polymer materials such as e.g. Polyethylene, Polypropylene, PVC, Polystyrene, Nylon, Polyester, Acrylics, Polyurethane, Polycarbonate, epoxy-based polymer and fluorene derivative polymer.

[0065] Figure 5(f) shows forming one or more regions 109, 111 having a refractive index gradient on portions of the waveguide 102. A refractive index gradient of the waveguide 102 may be tuned to form a light coupling arrangement 107 in the waveguide 102, as shown in Figure 5(g). The light coupling arrangement 107 may be substantially non-wavelength selective (in other words has an attenuation of the incoming optical signal that is negligible over a wide wavelength range, e.g. over the mentioned wavelength range(s)) in a wavelength range from 300 nm to 1700 nm.

[0066] As described above, to achieve non-wavelength selective light coupling, one of the methods is to generate refractive index (RI) gradient in the waveguide materials. On the basis of Snell's law ($n_1 \sin\theta_1 = n_2 \sin\theta_2$, where n_1 and n_2 are the refractive index for a first layer and a second layer respectively, θ_1 is the incident angle and θ_2 is refraction angle), the refraction angle of a light ray increases, and thus bending the light ray, when the light ray passes from a layer with higher RI to another layer with lower RI. Therefore, the reflection angle for the light emitted from the light source 104 is changed gradually and continuously when the light passes through a region having a RI gradient. As a result, the light emitted from the light source 104 can be non-wavelength selectively coupled to the waveguide 102. Another approach to achieve non-wavelength selective

light coupling is to modify the incident angle of the light ray emitted from the light source 104 to the light coupling arrangement 107, and/or of the light propagated in the light coupling arrangement 107 to the photo detector 108 in order to make the light ray satisfying total internal reflection, i.e. the incident angle θ_1 > critical angle θ_c. For example, this can be achieved through modifying the surface curvature of the interface between different materials having different refractive indexes, such as core and cladding materials, in the light coupling arrangement 107.

[0067] The refractive index gradient of the regions 109, 111 of the waveguide 102 may be tuned by emitting laser light to the waveguide 102, e.g. by laser direct writing of the waveguide 102. The refractive index (RI) of the waveguide materials may decrease after the waveguide materials are exposed to laser. A decrease of the refractive index of the waveguide materials may be proportional to the exposed energy dosage. A refractive index gradient can thus be generated by changing the exposed energy dosage from one direction to another direction along the regions 109, 111 of the waveguide 102, for example, from left to right or from bottom to top.

[0068] Further, the refractive index gradient of the regions 109, 111 may be tuned by distributing different amounts of e.g. metal ions or nanoparticles along the regions 109, 111. The refractive index gradient of the regions 109, 111 may also be tuned by changing a degree of e.g. polymer cross-linking along the regions 109, 111. The refractive index gradient of the regions 109, 111 may also be tuned by changing molecular bonding of e.g. polymer along the regions 109, 111. The refractive index gradient of the regions 109, 111 may also be tuned by generating an electric field across e.g. electro-opto materials along the regions 109, 111. The refractive index gradient of

the regions 109, 111 may also be tuned by generating a temperature gradient across e.g. thermal-opto materials along the regions 109, 111.

[0069] As shown in Figure 5(g), the light coupling arrangement 107 may include one or more first light coupling module 108 and one or more second light coupling module 110. For illustration purposes, only one first light coupling module 108 and one second light coupling module 110 are shown in Figure 1(a). The first light coupling module 108 may include a region 109 having a refractive index gradient and the second light coupling module 110 may include a region 111 having a refractive index gradient.

[0070] In one embodiment, the waveguide 102 may include one or more regions 109, 111 having the refractive index gradient. In another embodiment, the waveguide may include at least two regions 109, 111 having the refractive index gradient. The regions 109, 111 may be substantially non-wavelength selective (in other words has an attenuation of the incoming optical signal that is negligible over a wide wavelength range, e.g. over the mentioned wavelength range(s)) in a wavelength range from 300 nm to 1700 nm. The regions 109, 111 may be configured to couple light between the waveguide 102 and at least one optical element, e.g. the light source 104 or the photo detector 106. The regions 109, 111 may be configured to change characteristics of light propagating in the waveguide 102. The changes in the characteristics of light propagating in the waveguide may include but are not limited to changes in light propagation direction, convergence of light, focusing of light, diffraction of light, divergence of light and diffusion of light. Each region 109, 111 having the refractive index gradient may be disposed below the respective optical element, e.g. the light source 104 or the photo detector 106. The waveguide may include but is not limited to organic

material. The organic materials for the waveguide 102 may include but are not limited to Polyethylene, Polypropylene, PVC, Polystyrene, Nylon, Polyester, Acrylics, Polyurethane, Polycarbonate, epoxy-based polymers and fluorene derivative polymers. The regions 109, 111 may include but are not limited to polymer, electro-opto organic materials and thermal-opto organic materials.

[0071] The first light coupling module 108 and the second light coupling module 110 may be located at a distance from each other (e.g. may be formed at two opposite ends of the waveguide 102) so that the light emitted by the light source 104 may be received by the first light coupling module 108 (including the region 109 having the refractive index gradient) and input into an input side of the waveguide 102 (which is optically coupled with the first light coupling module 108), which in turn transmits the input light to an output side of the waveguide 102, which is optically coupled with the second light coupling module 110 (including the region 111 having the refractive index gradient). The second light coupling module 110, including the region 109 having the refractive index gradient, may receive the light from the waveguide 102 and transmit it to the photo detector 106, which will be described in more detail below.

[0072] Figure 5(h) shows a stacked layer 124 deposited on a first surface 112 of the waveguide 102. The stacked layer 124 may cover the first surface 112 of the waveguide 102. The stacked layer 124 may include one or more of a barrier layer, an adhesion layer and a spacer. The stacked layer 124 may be formed to prevent damage to the waveguide 102 when forming the light source 104 and the photo detector 106. The stacked layer 124 may have a thickness ranging from about 10 nm to about 1 mm. The stacked layer 124 may include but is not limited to silicon dioxide, silicon nitride, silicon oxynitride,

silicon carbide, quartz, transparent metal oxide, transparent polymer such as polyethylene terephthalate (PET), Su-8, polydimethylsioxane (PDMS) on a condition that these materials are transparent to the light emitted from the light source 104.

[0073] Figure 5(i) shows a light source 104 and a photo detector 106 formed above the waveguide 102. For illustration purposes, only one light source 104 and one photo detector 106 are shown. More than one light source 104 and more than one photo detector 106 can be formed above the waveguide 102. The light source 104, the photo detector 106 and the waveguide 102 may include but are not limited to organic material. The waveguide 102, the light coupling arrangement 107, the light source 104 and the photo detector 106 may be monolithically integrated. The light source 104 and the photo detector 106 may be disposed above the first surface 112 of the waveguide 102. The light source 104 may be disposed above the first light coupling module 108 (including the region 109 having the refractive index gradient) and the photo detector 106 may be disposed above the second light coupling module 110 (including the region 111 having the refractive index gradient). The light source 104 and the photo detector 106 may also be arranged orthogonally to the waveguide 102.

[0074] The light source 104 and the photo detector 106 may be manufactured using any of several different processes. Details of three such processes are described below.

[0075] Figure 6 shows a first process of manufacturing the light source 104 and the photo detector 106 according to an embodiment. In a first process, the light source 104 may be formed before the photo detector 106.

[0076] Figure 6(a) shows a structure 600 of the substrate 126, the waveguide 102 and the stacked layer 124. Figure 6(b) shows a transparent conductive electrode 202 of the

light source 104 deposited above the first surface 112 of the waveguide 102 (e.g. on the stacked layer 124). The transparent conductive electrode 202 of the light source 104 may have a thickness of about 120 nm. The transparent conductive electrode 202 may have a thickness ranging from about 50 nm to about 1 μm. The transparent conductive electrode 202 of the light source 104 may include but is not limited to transparent conductive oxide. The transparent conductive electrode 202 may also include but is not limited to conductive metal oxide, conductive polymer and conductive metallic silicide on a condition that these materials are transparent for the light emitted from the light source 104.

[0077] Figure 6(c) shows a first layer 602 formed on the transparent conductive electrode 202 of the light source 104. The first layer 602 may be formed by one or more of coating, printing, inkjet printing and/or physical deposition. The first layer 602 may also be cured. The first layer 602 may have a stack of materials. The stack of materials of the first layer 602 may include one or more of light emissive material 206, transparent conductive polymer 204, hole blocking or electron injection material 208, and/or cathode interface material 210. The layer of transparent conductive polymer 204 may have a thickness of about 80 nm. The layer of transparent conductive polymer 204 may include but is not limited to poly(3,4-ethylenedioxythiophene):poly(styrenesulfonic acid) (PEDOT:PSS). The light emissive layer 206 may have a thickness of about 80 nm. The light emissive layer 206 may also have a thickness ranging from about 3 nm to about 300 nm. The light emissive material 206 may include one or more organic materials. The one or more organic materials of the light emissive material 206 may include but are not limited to organic dye molecules and polymers. The light emissive layer 206 may

include but is not limited to phenyl-substituted poly(p-phenylenevinylene) (Ph-PPV). The layer of hole blocking or electron injection material 208 may have a thickness of about 1.5 nm. The layer of hole blocking or electron injection material 208 may include but is not limited to lithium fluoride. The layer of cathode interface material 210 may have a thickness of about 5 nm. The layer of cathode interface material 210 may include but is not limited to calcium.

[0078] Figure 6(d) shows an electrical conductive electrode 212 deposited on the first layer 602. The electrical conductive electrode 212 may have a thickness of about 300 nm. The electrical conductive electrode 212 may include but is not limited to cathode metal. The electrical conductive electrode 212 may include but is not limited to conductive metal oxide, conductive polymer and conductive metallic silicide. The transparent conductive electrode 202, the first layer 602 and the electrical conductive electrode 212 may form the light source 104.

[0079] During the processes described above and shown in Figures 6(a) to 6(d), a surface portion 603 of the stack layer 124, in which the photo detector 106 should be formed, may be masked so that the deposition of any material provided for the formation of the light source 102 may be prevented therein.

[0080] Figure 6(e) shows a transparent conductive electrode 302 of the photo detector 106 deposited above the first surface 112 of the waveguide 102 (e.g. on the stacked layer 124). The transparent conductive electrode 302 of the photo detector 106 may have a thickness of about 120 nm. The transparent conductive electrode 302 may include but is not limited to transparent conductive oxide. The transparent conductive electrode 302 may include but is not limited to conductive metal oxide, conductive polymer and

conductive metallic silicide on a condition that these materials are transparent to the light propagated in the waveguide 102.

[0081] Figure 6(f) shows a second layer 604 formed on the transparent conductive electrode 302 of the photo detector 106. The second layer 604 of the photo detector 106 may be formed by one or more of coating, printing, inkjet printing and/or physical deposition. The second layer 604 may also be cured. The second layer 604 may have a stack of materials. The stack of materials of the second layer 604 may include one or more of photovoltaic material 306, transparent conductive polymer 304 and/or cathode interface material 308. The layer of transparent conductive polymer 304 may have a thickness of about 40 nm. The layer of transparent conductive polymer 304 may include but is not limited to poly(3,4-ethylenedioxythiophene):poly(styrenesulfonic acid) (PEDOT:PSS). The photovoltaic layer 306 may have a thickness of about 80 nm. The photovoltaic layer 306 may also have a thickness ranging from about 3 nm to about 300 nm. The photovoltaic material 306 may include one or more organic materials. The one or more organic materials of the photovoltaic material 306 may include but are not limited to organic dye molecules and polymers. The photovoltaic layer 306 may include but is not limited to poly(3-hexythiophene) : 1-(3-methoxycarbonyl)-propyl-1-phenyl-(6,6)C_{60} (P3HT:PCBM), C_{60}, ZnPC, and Pentacene. Further, the photovoltaic layer 306 may be a multilayer structure including but not limiting to e.g. ZnPC/C_{60}, Pentacene/ZnPC/Pentacene/C_{60}, forming multiple heterojunction cells. The layer of cathode interface material 308 may have a thickness of about 5 nm. The layer of cathode interface material 308 may but is not limited to calcium.

[0082] Figure 6(g) shows an electrical conductive electrode 310 deposited on the second layer 604 of the photo detector 106. The electrical conductive electrode 310 may have a thickness of about 300 nm. The electrical conductive electrode 310 of the photo detector 106 may include but is not limited to cathode metal. The electrical conductive electrode 310 may include but is not limited to conductive metal oxide, conductive polymer and conductive metallic silicide. The transparent conductive electrode 302, the second layer 604 and the electrical conductive electrode 310 may form the photo detector 106.

[0083] During the processes described above and shown in Figures 6(e) to 6(g), a surface portion 605 of the stack layer 124, in which the light source 102 has been formed, and an upper surface 606 of the light source 104 may be masked so that the deposition of any material provided for the formation of the photo detector 106 may be prevented therein.

[0084] Figure 7 shows a second process of manufacturing the light source 104 and the photo detector 106 according to an embodiment. In the second process, a transparent conductive electrode 202 of the light source 104 and a transparent conductive electrode 302 of the photo detector 106 may be deposited above the first surface 108 of the waveguide 102 simultaneously.

[0085] Figure 7(a) shows a structure 700 of the substrate 126, the waveguide 102 and the stacked layer 124. Figure 7(b) shows a transparent conductive electrode 202 of the light source 104 and a transparent conductive electrode 302 of the photo detector 106 deposited above the first surface 108 of the waveguide 102 (e.g. on the stacked layer 124) simultaneously. The transparent conductive electrode 202 of the light source 104 may

have a thickness of about 120 nm. The transparent conductive electrode 202 may have a thickness ranging from about 50 nm to about 1 μm. The transparent conductive electrode 202 of the light source 104 may include but is not limited to transparent conductive oxide. The transparent conductive electrode 202 may also include but is not limited to conductive metal oxide, conductive polymer and conductive metallic silicide on a condition that these materials are transparent for the light emitted from the light source 104. The transparent conductive electrode 302 of the photo detector 106 may have a thickness of about 120 nm. The transparent conductive electrode 302 may include but is not limited to transparent conductive oxide. The transparent conductive electrode 302 may include but is not limited to conductive metal oxide, conductive polymer and conductive metallic silicide on a condition that these materials are transparent to the light propagated in the waveguide 102.

[0086] Figure 7(c) shows a first layer 702 formed on the transparent conductive electrode 202 of the light source 104. The first layer 702 may be formed by one or more of coating, printing, inkjet printing and/or physical deposition. The first layer 702 may also be cured. The first layer 702 may have a stack of materials. The stack of materials of the first layer 702 may include one or more of light emissive material 206, transparent conductive polymer 204, hole blocking or electron injection material 208, and/or cathode interface material 210. The layer of transparent conductive polymer 204 may have a thickness of about 80 nm. The layer of transparent conductive polymer 204 may include but is not limited to poly(3,4-ethylenedioxythiophene):poly(styrenesulfonic acid) (PEDOT:PSS). The light emissive layer 206 may have a thickness of about 80 nm. The light emissive layer 206 may also have a thickness ranging from about 3 nm to about

300 nm. The light emissive material 206 may include one or more organic materials. The one or more organic materials of the light emissive material 206 may include but are not limited to organic dye molecules and polymers. The light emissive layer 206 may include but is not limited to phenyl-substituted poly(p-phenylenevinylene) (Ph-PPV). The layer of hole blocking or electron injection material 208 may have a thickness of about 1.5 nm. The layer of hole blocking or electron injection material 208 may include but is not limited to lithium fluoride. The layer of cathode interface material 210 may have a thickness of about 5 nm. The layer of cathode interface material 210 may include but is not limited to calcium. An upper surface 703 of the transparent conductive electrode 302 of the photo detector 106 may remain exposed, in other words, the upper surface 703 of the transparent conductive electrode 302 may be masked during the formation of the first layer 702 of the light source 104.

[0087] Figure 7(d) shows an electrical conductive electrode 212 deposited on the first layer 702 of the light source 104. The electrical conductive electrode 212 may have a thickness of about 300 nm. The electrical conductive electrode 212 of the light source 104 may include but is not limited to cathode metal. The electrical conductive electrode 212 may include but is not limited to conductive metal oxide, conductive polymer and conductive metallic silicide. The transparent conductive electrode 202, the first layer 702 and the electrical conductive electrode 212 may form the light source 104. The upper surface 703 of the transparent conductive electrode 302 of the photo detector 106 may remain exposed, in other words, the upper surface 703 of the transparent conductive electrode 302 may be masked during the formation of the electrical conductive electrode

212 of the light source 104. Thus, with the end of this process, the light source 104 is completed.

[0088] Figure 7(e) shows a second layer 704 formed on the transparent conductive electrode 302 of the photo detector 106. The second layer 704 of the photo detector 106 may be formed by one or more of coating, printing, inkjet printing and/or physical deposition. The second layer 704 may also be cured. The second layer 704 may have a stack of materials. The stack of materials of the second layer 704 may include one or more of photovoltaic material 306, transparent conductive polymer 304 and/or cathode interface material 308. The layer of transparent conductive polymer 304 may have a thickness of about 40 nm. The layer of transparent conductive polymer 304 may include but is not limited to poly(3,4-ethylenedioxythiophene):poly(styrenesulfonic acid) (PEDOT:PSS). The photovoltaic layer 306 may have a thickness of about 80 nm. The photovoltaic layer 306 may also have a thickness ranging from about 3 nm to about 300 nm. The photovoltaic material 306 may include one or more organic materials. The one or more organic materials of the photovoltaic material 306 may include but are not limited to organic dye molecules and polymers. The photovoltaic layer 306 may include but is not limited to poly(3-hexythiophene) : 1-(3-methoxycarbonyl)-propyl-1-phenyl-(6,6)C_{60} (P3HT:PCBM), C_{60}, ZnPC, and Pentacene. Further, the photovoltaic layer 306 may be a multilayer structure including but not limiting to e.g. ZnPC/C_{60}, Pentacene/ZnPC/Pentacene/C_{60}, forming multiple heterojunction cells. The layer of cathode interface material 308 may have a thickness of about 5 nm. The layer of cathode interface material 308 may but is not limited to calcium. An upper surface 705 of the light source 104 just completed may remain exposed, in other words, the upper surface

705 of the light source 104 may be masked during the formation of the second layer 704 of the photo detector 106.

[0089] Figure 7(f) shows an electrical conductive electrode 310 deposited on the second layer 704 of the photo detector 106. The electrical conductive electrode 310 may have a thickness of about 300 nm. The electrical conductive electrode 310 of the photo detector 106 may include but is not limited to cathode metal. The electrical conductive electrode 310 may include but is not limited to conductive metal oxide, conductive polymer and conductive metallic silicide. The transparent conductive electrode 302, the second layer 704 and the electrical conductive electrode 310 may form the photo detector 106. The upper surface 705 of the light source 104 may remain exposed, in other words, the upper surface 705 of the light source 104 may be masked during the formation of the electrical conductive electrode 310 of the photo detector 106.

[0090] Figure 8 shows a third process of manufacturing the light source 104 and the photo detector 106 according to an embodiment. In the third process, the light source 104 and the photo detector 106 may be formed simultaneously.

[0091] Figure 8(a) shows a structure 800 of the substrate 126, the waveguide 102 and the stacked layer 124. Figure 8(b) shows a transparent conductive electrode 202 of the light source 104 and a transparent conductive electrode 302 of the photo detector 106 deposited above the first surface 108 of the waveguide 102 (e.g. on the stacked layer 124) simultaneously. The transparent conductive electrode 202 of the light source 104 may have a thickness of about 120 nm. The transparent conductive electrode 202 may have a thickness ranging from about 50 nm to about 1 μm. The transparent conductive electrode 202 of the light source 104 may include but is not limited to transparent conductive

oxide. The transparent conductive electrode 202 may also include but is not limited to conductive metal oxide, conductive polymer and conductive metallic silicide on a condition that these materials are transparent for the light emitted from the light source 104. The transparent conductive electrode 302 of the photo detector 106 may have a thickness of about 120 nm. The transparent conductive electrode 302 may include but is not limited to transparent conductive oxide. The transparent conductive electrode 302 may include but is not limited to conductive metal oxide, conductive polymer and conductive metallic silicide on a condition that these materials are transparent to the light propagated in the waveguide 102.

[0092] Figure 8(c) shows a first layer 802 formed on the transparent conductive electrode 202 of the light source 104. The first layer 802 of the light source 104 may be formed by one or more of coating, printing, inkjet printing and/or physical deposition. The first layer 802 may also be cured. The first layer 802 may have a stack of materials. The stack of materials of the first layer 802 may include one or more of light emissive material 206, transparent conductive polymer 204, hole blocking or electron injection material 208, and/or cathode interface material 210. The layer of transparent conductive polymer 204 may have a thickness of about 80 nm. The layer of transparent conductive polymer 204 may include but is not limited to poly(3,4-ethylenedioxythiophene):poly(styrenesulfonic acid) (PEDOT:PSS). The light emissive layer 206 may have a thickness of about 80 nm. The light emissive layer 206 may also have a thickness ranging from about 3 nm to about 300 nm. The light emissive material 206 may include one or more organic materials. The one or more organic materials of the light emissive material 206 may include but are not limited to organic dye molecules

and polymers. The light emissive layer 206 may include but is not limited to phenyl-substituted poly(p-phenylenevinylene) (Ph-PPV). The layer of hole blocking or electron injection material 208 may have a thickness of about 1.5 nm. The layer of hole blocking or electron injection material 208 may include but is not limited to lithium fluoride. The layer of cathode interface material 210 may have a thickness of about 5 nm. The layer of cathode interface material 210 may include but is not limited to calcium. An upper surface 803 of the transparent conductive electrode 302 of the photo detector 106 may remain exposed, in other words, the upper surface 803 of the transparent conductive electrode 302 may be masked during the formation of the first layer 802 of the light source 104.

[0093] Figure 8(d) shows a second layer 804 formed on the transparent conductive electrode 302 of the photo detector 106. The second layer 804 of the photo detector 106 may be formed by one or more of coating, printing, inkjet printing and/or physical deposition. The second layer 804 may also be cured. The second layer 804 may have a stack of materials. The stack of materials of the second layer 804 may include one or more of photovoltaic material 306, transparent conductive polymer 304 and/or cathode interface material 308. The layer of transparent conductive polymer 304 may have a thickness of about 40 nm. The layer of transparent conductive polymer 304 may include but is not limited to poly(3,4-ethylenedioxythiophene):poly(styrenesulfonic acid) (PEDOT:PSS). The photovoltaic layer 306 may have a thickness of about 80 nm. The photovoltaic layer 306 may also have a thickness ranging from about 3 nm to about 300 nm. The photovoltaic material 306 may include one or more organic materials. The one or more organic materials of the photovoltaic material 306 may include but are not

limited to organic dye molecules and polymers. The photovoltaic layer 306 may include but is not limited to poly(3-hexythiophene) : 1-(3-methoxycarbonyl)-propyl-1-phenyl-(6,6)C_{60} (P3HT:PCBM), C_{60}, ZnPC, and Pentacene. Further, the photovoltaic layer 306 may be a multilayer structure including but not limiting to e.g. ZnPC/C_{60}, Pentacene/ZnPC/Pentacene/C_{60}, forming multiple heterojunction cells. The layer of cathode interface material 308 may have a thickness of about 5 nm. The layer of cathode interface material 308 may but is not limited to calcium. An upper surface 805 of the first layer 802 of the light source 104 may remain exposed, in other words, the upper surface 805 of the first layer 802 may be masked during the formation of the second layer 804 of the photo detector 106.

[0094] Figure 8(e) shows an electrical conductive electrode 212 deposited on the first layer 802 of the light source 104 and an electrical conductive electrode 310 deposited on the second layer 804 of the photo detector 106 simultaneously. The electrical conductive electrode 212 of the light source 104 may have a thickness of about 300 nm. The electrical conductive electrode 212 may, but is not limited to include cathode metal. The electrical conductive electrode 212 may include but is not limited to conductive metal oxide, conductive polymer and conductive metallic silicide. The transparent conductive electrode 202, the first layer 802 and the electrical conductive electrode 212 may form the light source 104. The electrical conductive electrode 310 of the photo detector 106 may have a thickness of about 300 nm. The electrical conductive electrode 310 may include but is not limited to cathode metal. The electrical conductive electrode 310 may include but is not limited to conductive metal oxide, conductive polymer and conductive

metallic silicide. The transparent conductive electrode 302, the second layer 804 and the electrical conductive electrode 310 may form the photo detector 106.

[0095] The processes for manufacturing different embodiments of the multi-layer structure 100 can be modified by a skilled person from the process as described above. For example, for manufacturing the multi-layer structure 100 of Figures 1(a) to 1(c) where the core layer 114, the first cladding layer 120 and the second cladding layer 122 may have a same size, the core layer 114 of the waveguide 102 may not be etched. The process may continue from Figure 5(c) to Figure 5(e).

[0096] Further, for manufacturing the multi-layer structure 100 of Figures 1(d), 1(f) and 1(h) where the stacked layer 124 may be disposed between the light source 104 and the first light coupling module 108 and a further stacked layer 130 may be disposed between the photo detector 106 and the second light coupling module 110, the stacked layer 124 and the further stacked layer 130 may be deposited on the first surface 112 of the waveguide simultaneously in Figure 5(h) instead.

[0097] Figure 11(a) shows a schematic diagram of the multi-layer structure 100 implemented as e.g. a biosensor 1100. The biosensor 1100 may include antibody 1102 on a surface 1104 of the stacked layer 124 facing away from the waveguide 102. Figure 11(b) shows a graph 1106 of intensity plotted against wavelength before the antibody 1102 interacts with antigen 1108. Before the antibody 1102 on the biosensor 1100 interacts with the antigen 1108, a resonance wavelength of the biosensor 1100 is at point 1110 of graph 1106.

[0098] Figure 11(c) shows a schematic diagram of the antibody 1102 on the surface 1104 interacting with the antigen 1108. Figure 11(d) shows a graph 1112 of intensity

plotted against wavelength after the antibody 1102 interacts with the antigen 1108. After the antibody 1102 on the biosensor 1100 interacts with the antigen 1108, the resonance wavelength of the biosensor 1100 is at point 1114 of graph 1112.

[0099] Comparing graph 1106 of Figure 11(b) and graph 1112 of Figure 11(d), it can be observed that the resonance wavelength of the biosensor 1100 increases after the antibody 1102 interacts with the antigen 1108.

[0100] While embodiments of the invention have been particularly shown and described with reference to specific embodiments, it should be understood by those skilled in the art that various changes in form and detail may be made therein without departing from the spirit and scope of the invention as defined by the appended claims. The scope of the invention is thus indicated by the appended claims and all changes which come within the meaning and range of equivalency of the claims are therefore intended to be embraced.

Claims

What is claimed is:

1. A method of manufacturing a multi-layer structure, the method comprising:

forming a waveguide on a substrate;

forming a light coupling arrangement in the waveguide, wherein the light coupling arrangement is substantially non-wavelength selective;

forming at least one light source above the waveguide; and

forming at least one photo detector above the waveguide;

wherein the at least one light source, the at least one photo detector and the waveguide comprise organic material, and

wherein the waveguide, the light coupling arrangement, the at least one light source and the at least one photo detector are monolithically integrated.

2. The method of claim 1,

wherein the light coupling arrangement is substantially non-wavelength selective in a wavelength range from 300 nm to 1700 nm.

3. The method of claim 1,

wherein forming the light coupling arrangement comprises forming one or more first light coupling module and one or more second light coupling module.

4. The method of claim 3,

wherein forming the light coupling arrangement further comprises forming each first light coupling module below the respective light source and forming each second light coupling module below the respective photo detector.

5. The method of claim 1,

further comprising disposing the light source and the photo detector above a first surface of the waveguide.

6. The method of claim 1,

wherein forming the waveguide further comprises:

forming a first cladding layer on the substrate;

forming a core layer on the first cladding layer; and

forming a second cladding layer on the core layer.

7. The method of claim 6,

wherein the core layer, the first cladding layer and the second cladding layer comprise polymer material.

8. The method of claim 1,

wherein forming the at least one light source comprises:

depositing a transparent conductive electrode above the first surface of the waveguide;

forming a first layer on the transparent conductive electrode; and

depositing an electrical conductive electrode on the first layer.

9. The method of claim 1,

wherein forming the at least one photo detector comprises:

depositing a transparent conductive electrode above the first surface of the waveguide;

forming a second layer on the transparent conductive electrode; and

depositing an electrical conductive electrode on the first layer.

10. The method of claim 1,

further comprising forming the at least one light source and the at least one photo detector simultaneously.

11. The method of claim 8,

wherein the first layer of the at least one light source is formed by one or more of a group consisting of coating, printing, inkjet printing and physical deposition.

12. The method of claim 8,

wherein the first layer of the at least one light source comprises a stack of materials.

13. The method of claim 12,

wherein the stack of materials of the first layer comprises one or more of a group consisting of light emissive material, transparent conductive polymer, hole blocking or electron injection material, and cathode interface material.

14. The method of claim 9,

wherein the second layer of the at least one photo detector is formed by one or more of a group consisting of coating, printing, inkjet printing and physical deposition.

15. The method of claim 9,

wherein the second layer of the at least one photo detector comprises a stack of materials.

16. The method of claim 15,

wherein the stack of materials of the second layer comprises one or more of a group consisting of organic photovoltaic material, transparent conductive polymer and cathode interface material.

17. The method of claim 1,

wherein the multi-layer structure is manufactured in a batch process or in a roll-to-roll continuous process.

18. A method of manufacturing an optical sensor comprising:

forming a waveguide;

forming one or more first coupling module on the waveguide, each first coupling module being substantially non-wavelength selective over a first wavelength range;

forming one or more second coupling module on the waveguide, each second coupling module being substantially non-wavelength selective over a second wavelength range;

forming at least one light source coupled to the waveguide through the respective first coupling module; and

forming at least one photo detector coupled to the waveguide through the respective second coupling module;

wherein the one or more first and second coupling modules, the at least one light source, the at least one photo detector and the waveguide comprise an organic material; and

wherein the one or more first and second coupling modules, the at least one light source, the at least one photo detector and the waveguide are monolithically integrated.

19. The method of claim 18,

wherein forming the waveguide further comprises:

forming a first cladding layer on the substrate;

forming a core layer on the first cladding layer; and

forming a second cladding layer on the core layer.

20. The method of claim 18,

wherein forming the at least one light source comprises:

depositing a transparent conductive electrode above the first surface of the waveguide;

forming a first layer on the transparent conductive electrode; and

depositing an electrical conductive electrode on the first layer.

21. The method of claim 18,

wherein forming the at least one photo detector comprises:

depositing a transparent conductive electrode above the first surface of the waveguide;

forming a second layer on the transparent conductive electrode; and

depositing an electrical conductive electrode on the first layer.

22. The method of claim 18,

further comprising forming the at least one light source and the at least one photo detector simultaneously.

23. The method of claim 18,

wherein the optical sensor is manufactured in a batch process or in a roll-to-roll continuous process.

24. The method of claim 18,

wherein the optical sensor is manufactured as a biosensor.

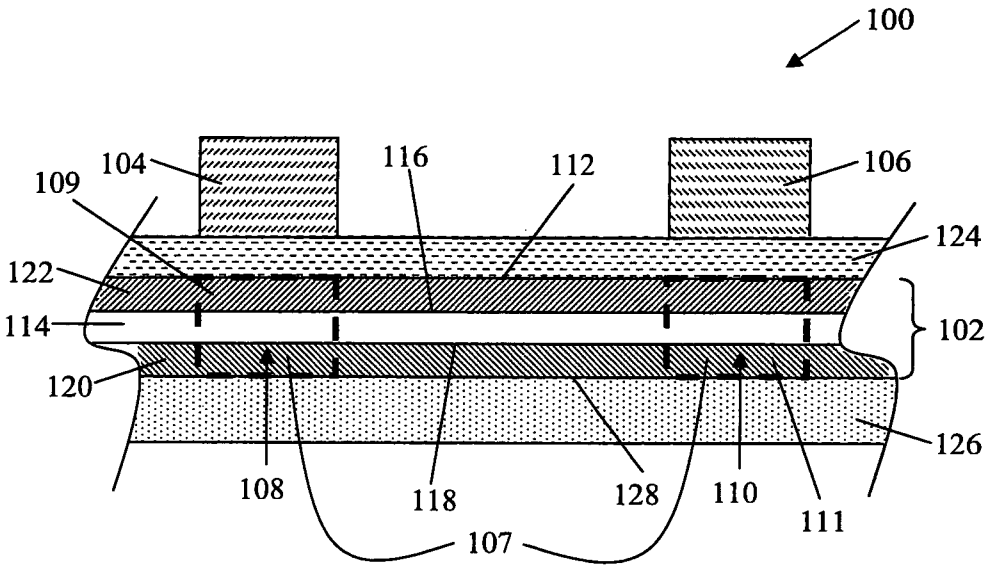

Figure 1(a)

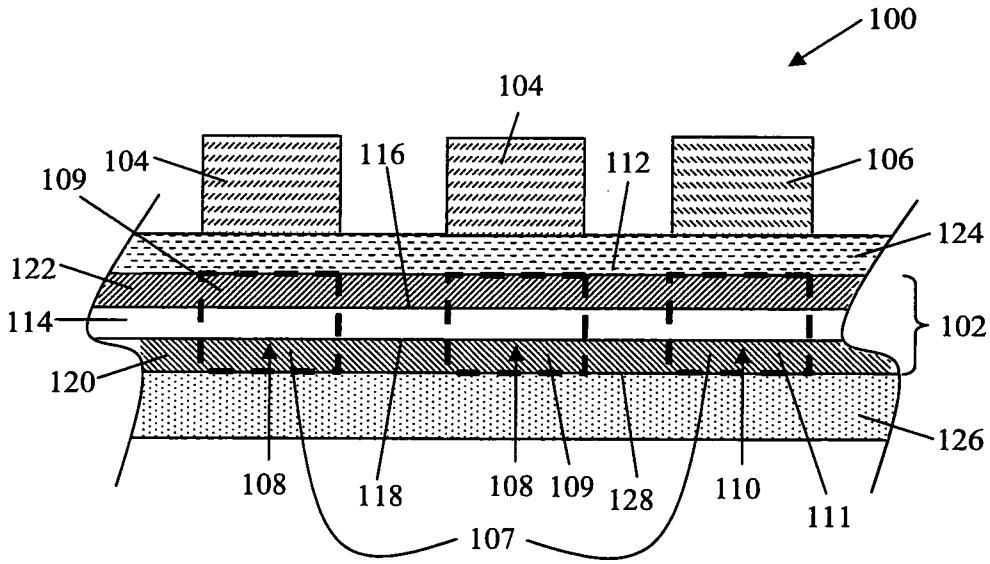

Figure 1(b)

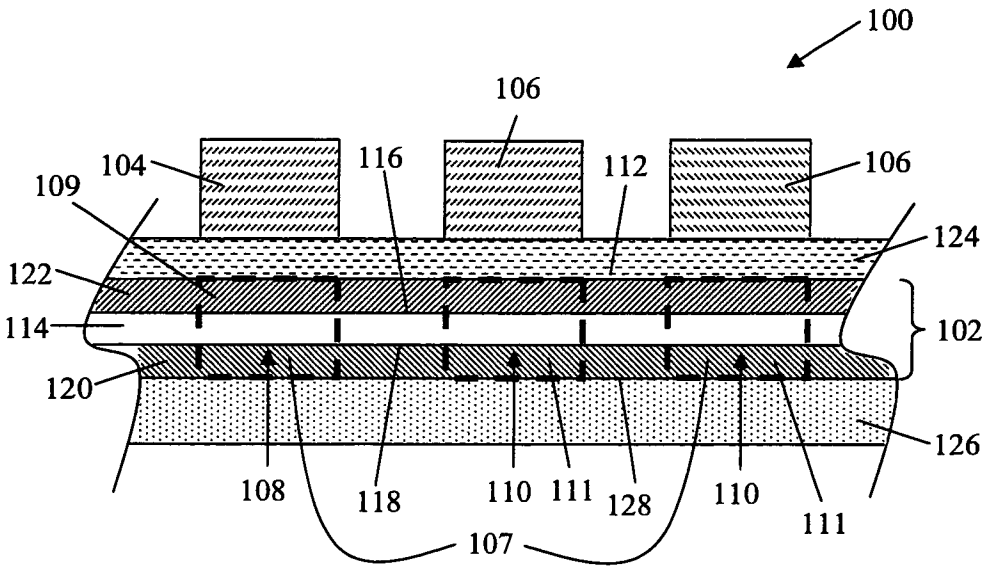

Figure 1(c)

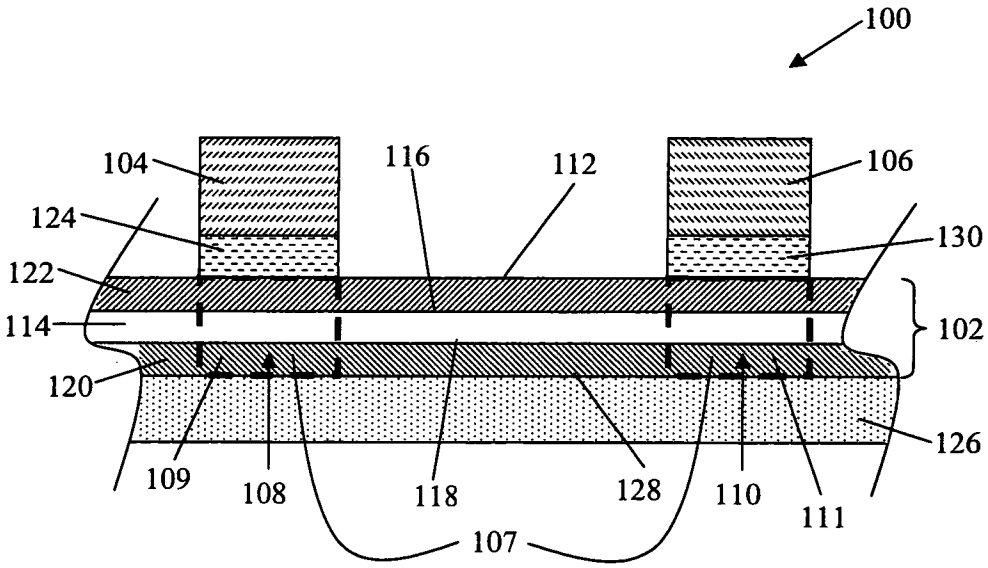

Figure 1(d)

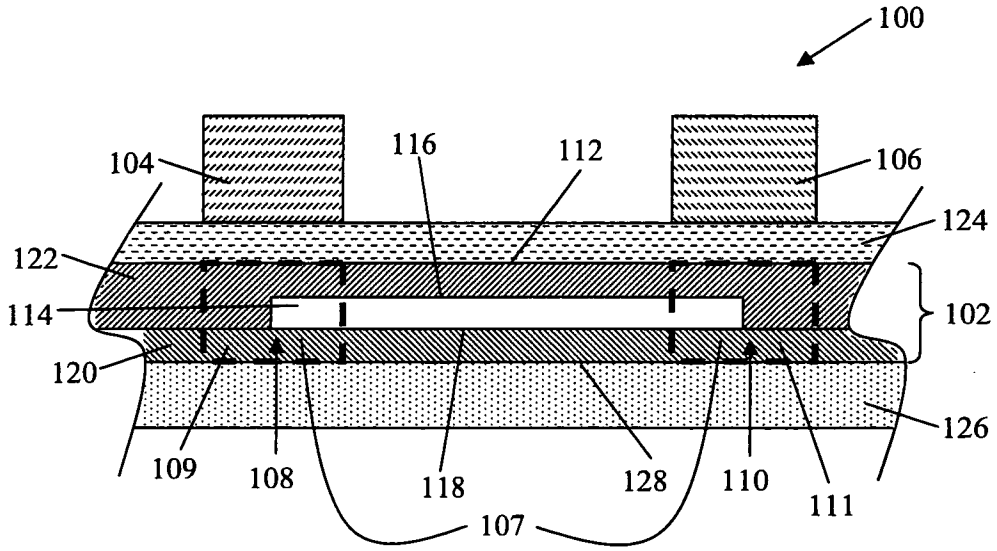

Figure 1(e)

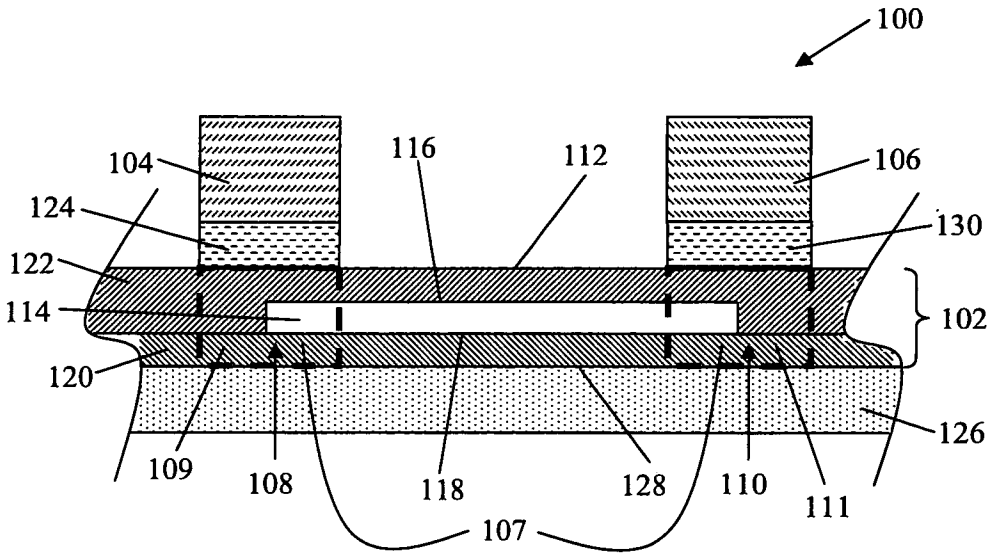

Figure 1(f)

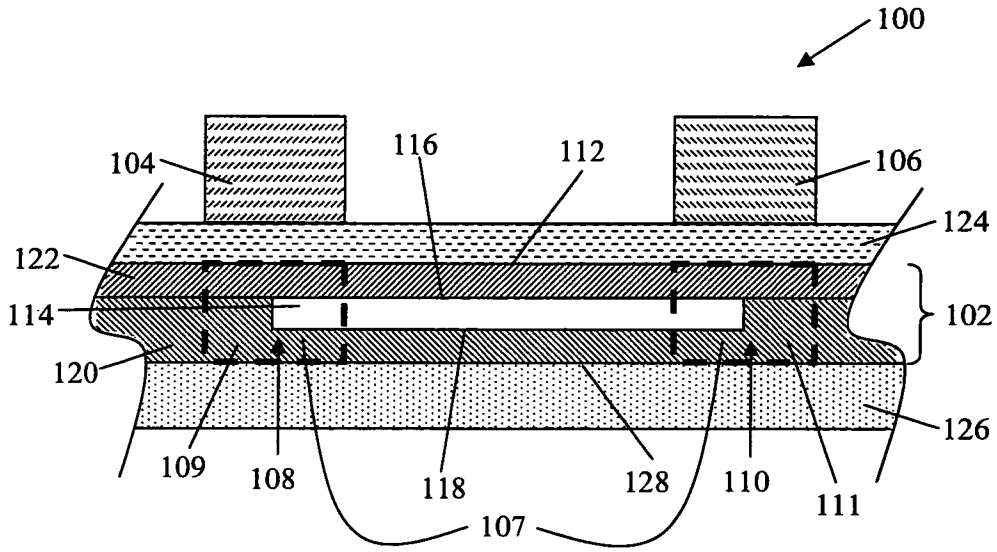

Figure 1(g)

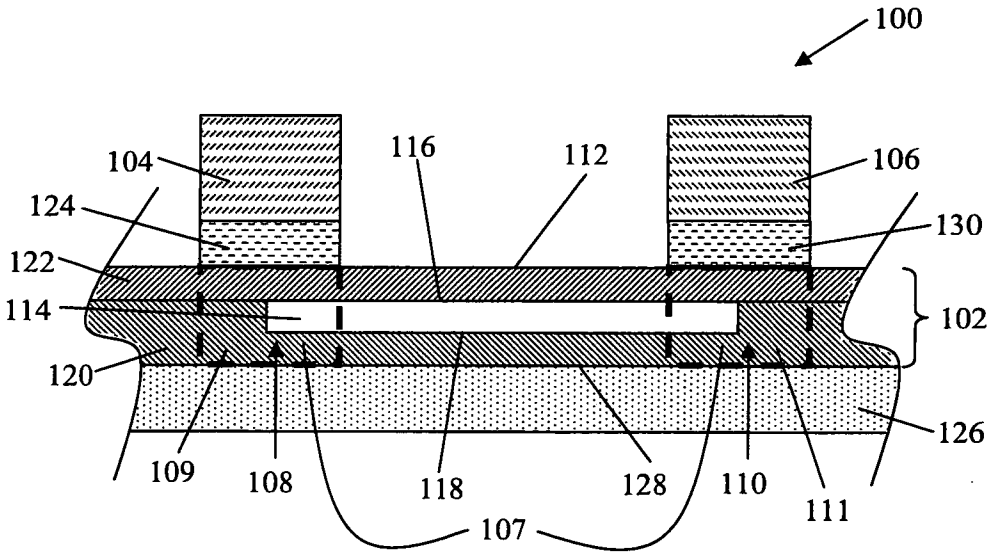

Figure 1(h)

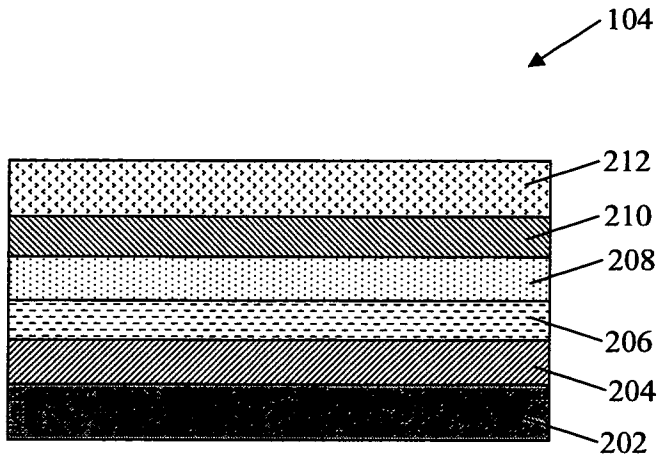

Figure 2

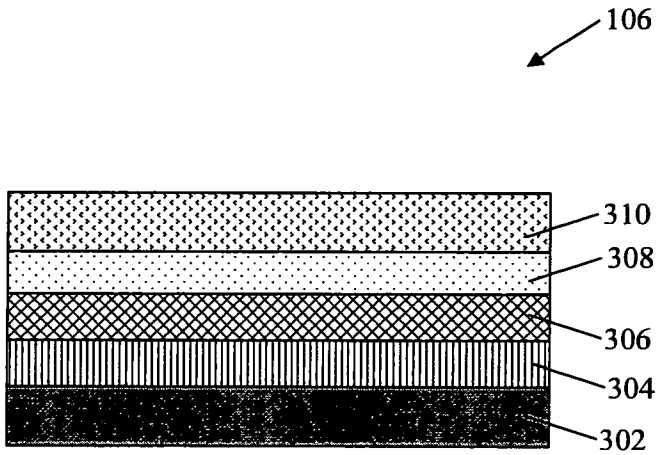

Figure 3

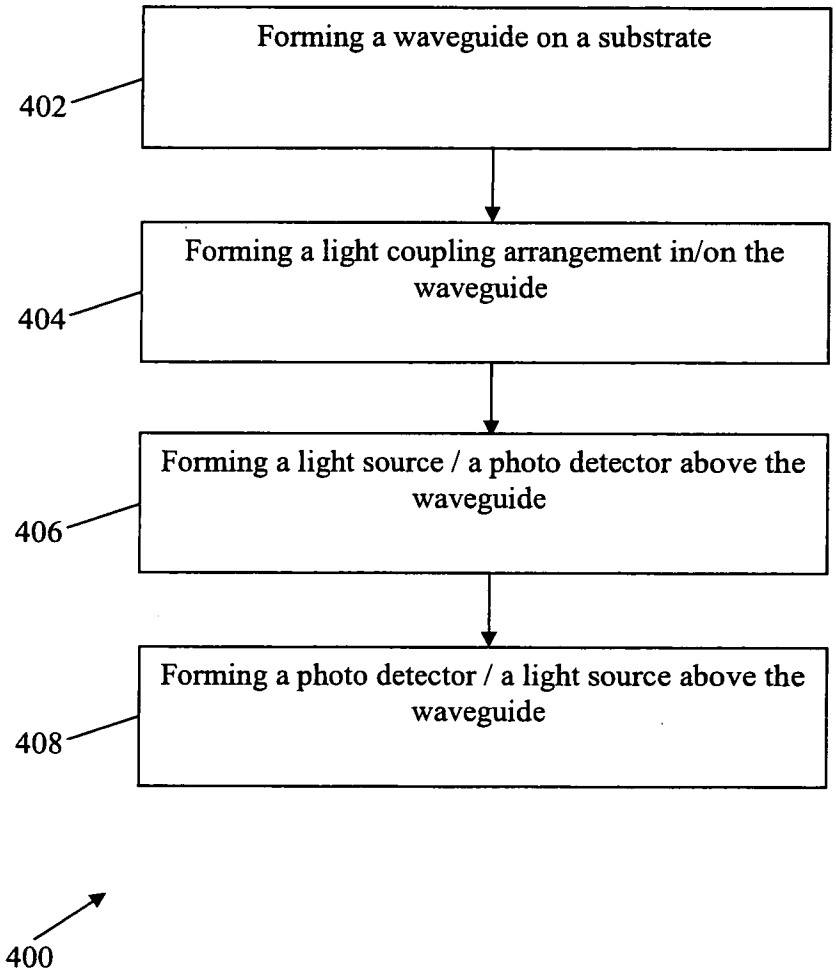
Forming a waveguide on a substrate
402
Forming a light coupling arrangement in/on the waveguide
404
Forming a light source / a photo detector above the waveguide
406
Forming a photo detector / a light source above the waveguide
408
400

Figure 4

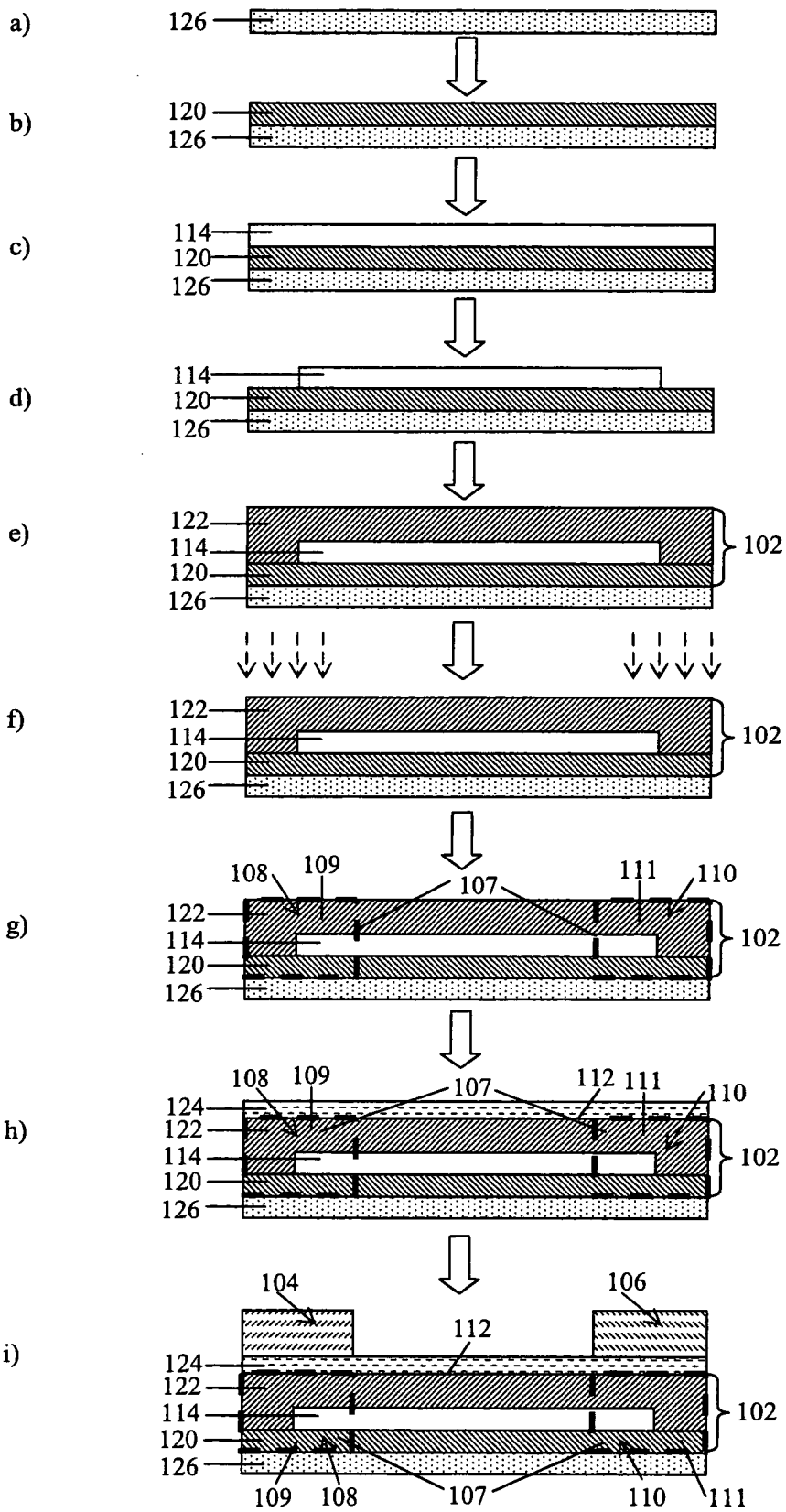
a)
126
b)
120
126
c)
114
120
126
d)
114
120
126
e)
122
114
120
126
102
f)
122
114
120
126
102
g)
108
109
107
111
110
122
114
120
126
102
h)
108
109
107
112
111
110
124
122
114
120
126
102
i)
104
106
112
124
122
114
120
126
102
109
108
107
110
111

Figure 5

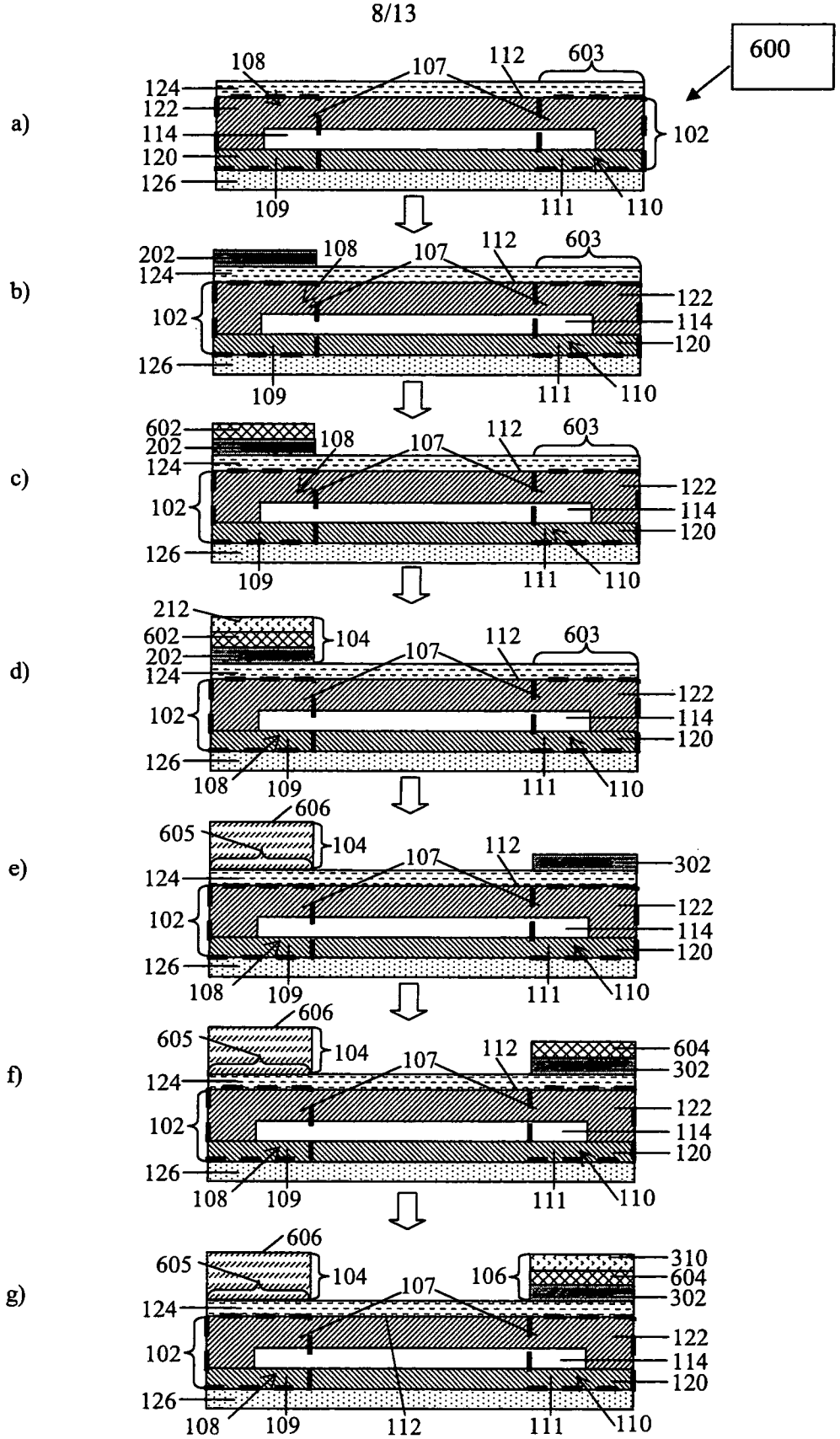
600
a)
b)
c)
d)
e)
f)
g)
108
107
112
603
124
122
114
120
126
102
109
111
110
202
602
212
104
606
605
302
604
310
106

Figure 6

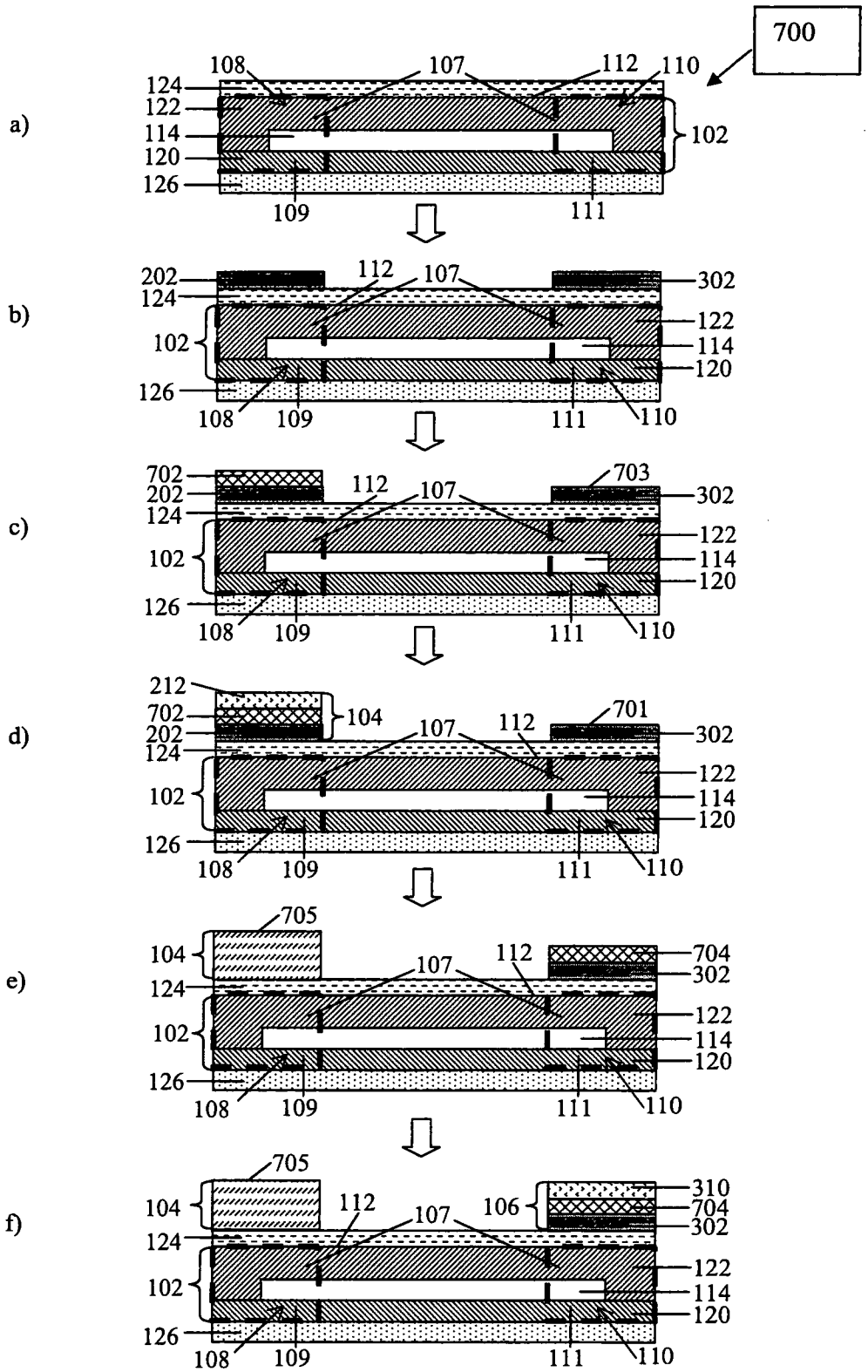
700
a)
108
107
112
110
124
122
114
120
126
102
109
111
b)
202
112
107
302
124
122
102
114
120
126
108
109
111
110
c)
702
202
112
107
703
302
124
122
102
114
120
126
108
109
111
110
d)
212
702
202
104
107
112
701
302
124
122
102
114
120
126
108
109
111
110
e)
705
104
107
112
704
302
124
122
102
114
120
126
108
109
111
110
f)
705
104
112
107
106
310
704
302
124
122
102
114
120
126
108
109
111
110

Figure 7

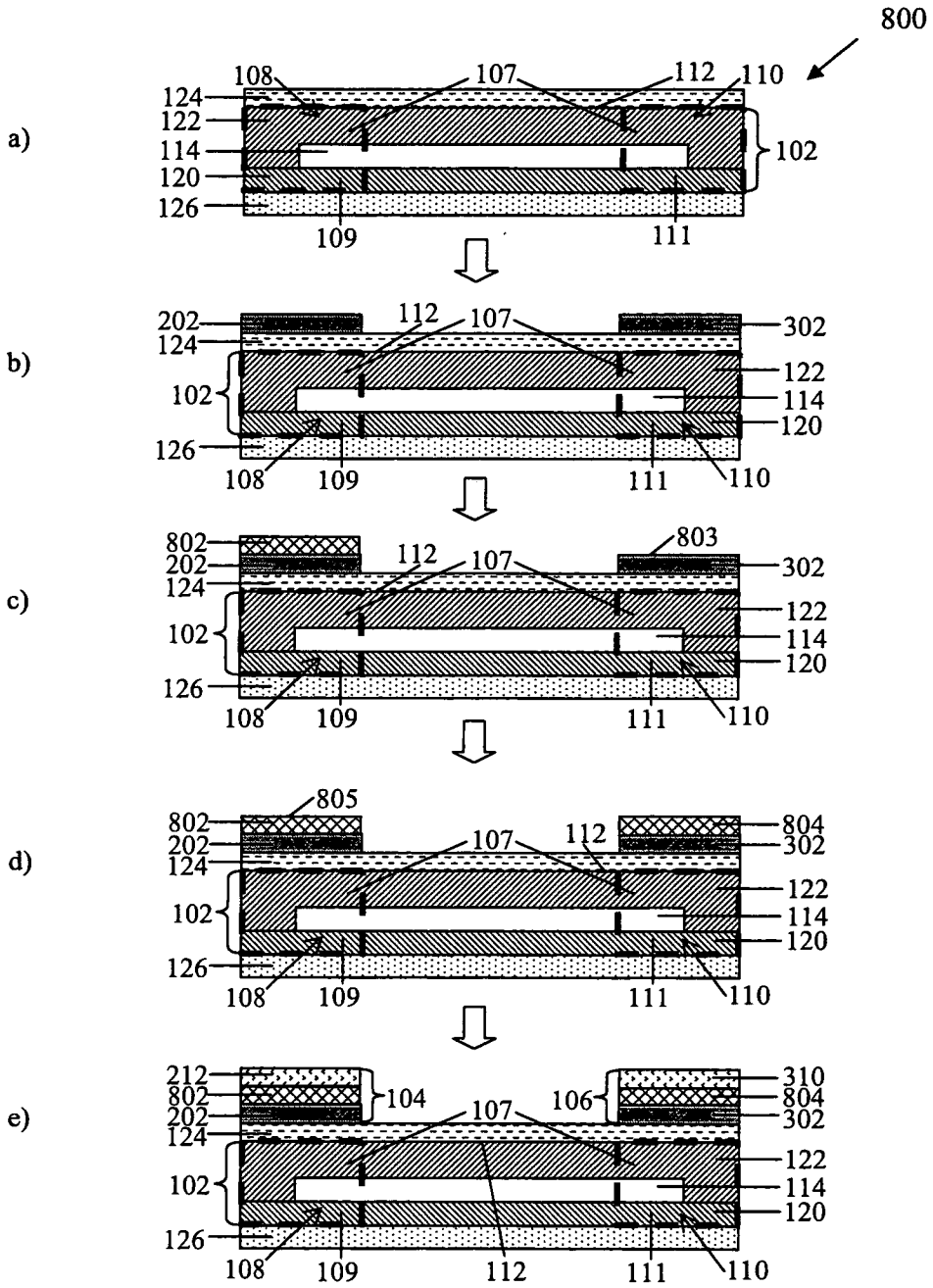
800
a)
108
107
112
110
124
122
114
120
126
102
109
111
b)
202
112
107
302
124
122
102
114
120
126
108
109
111
110
c)
802
803
202
112
107
302
124
122
102
114
120
126
108
109
111
110
d)
805
802
804
202
107
112
302
124
122
102
114
120
126
108
109
111
110
e)
212
310
802
104
106
804
202
107
302
124
122
102
114
120
126
108
109
112
111
110

Figure 8

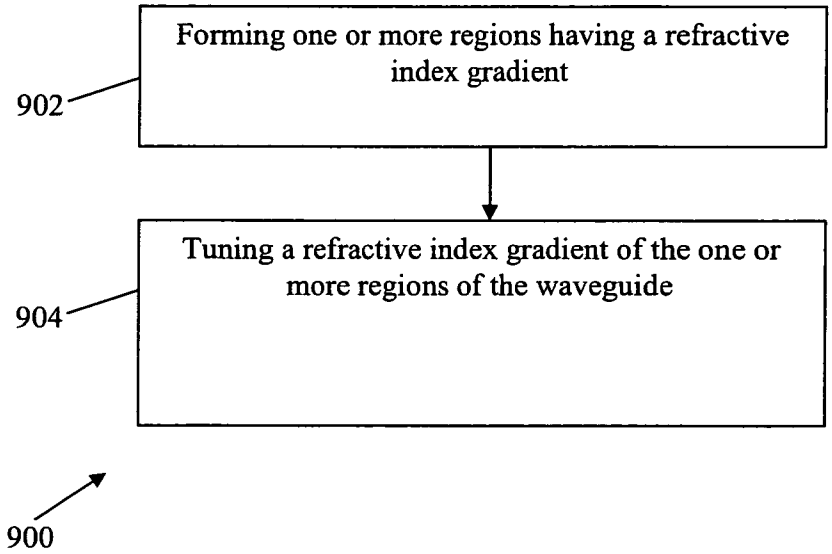
Forming one or more regions having a refractive index gradient
902
Tuning a refractive index gradient of the one or more regions of the waveguide
904
900

Figure 9

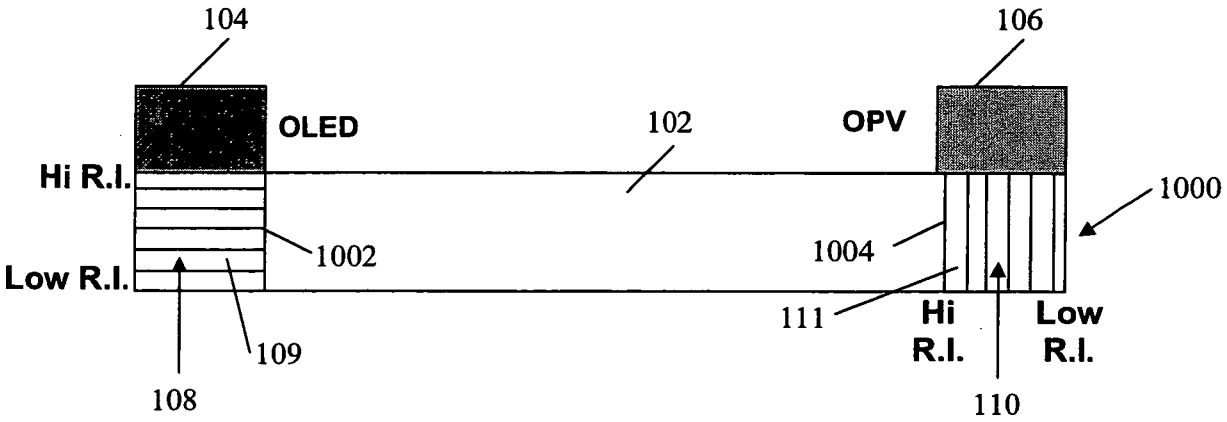
104
106
OLED
102
OPV
Hi R.I.
1000
1002
1004
Low R.I.
111
Hi
R.I.
Low
R.I.
109
108
110

Figure 10

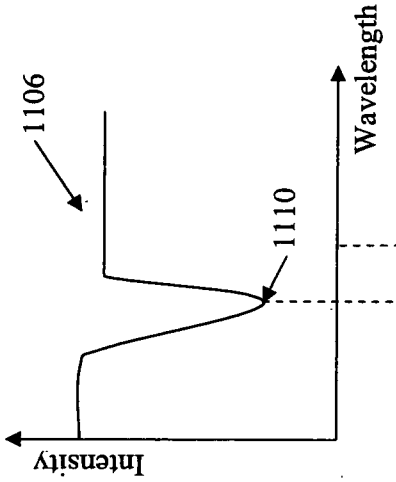

Figure 11(b)

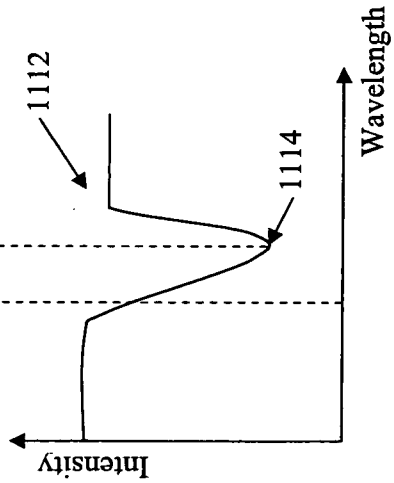

Figure 11(d)

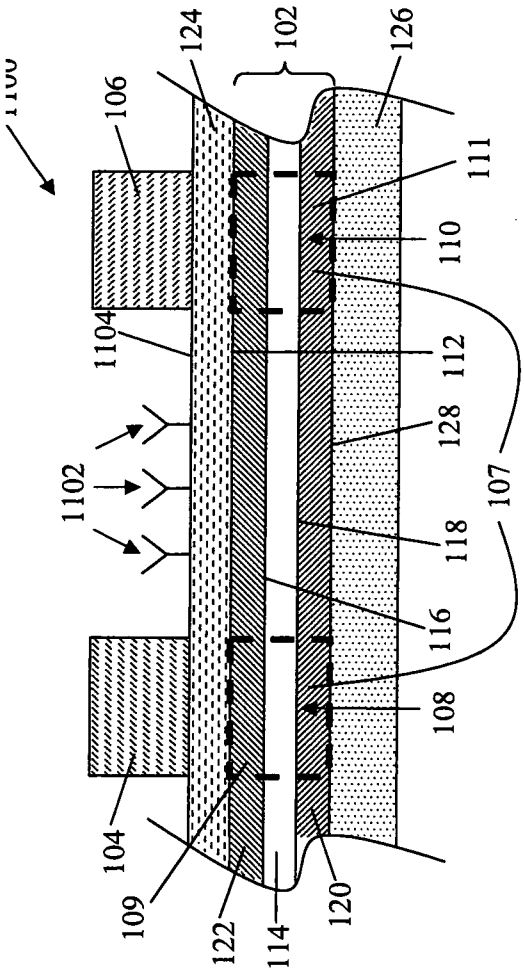

Figure 11(a)

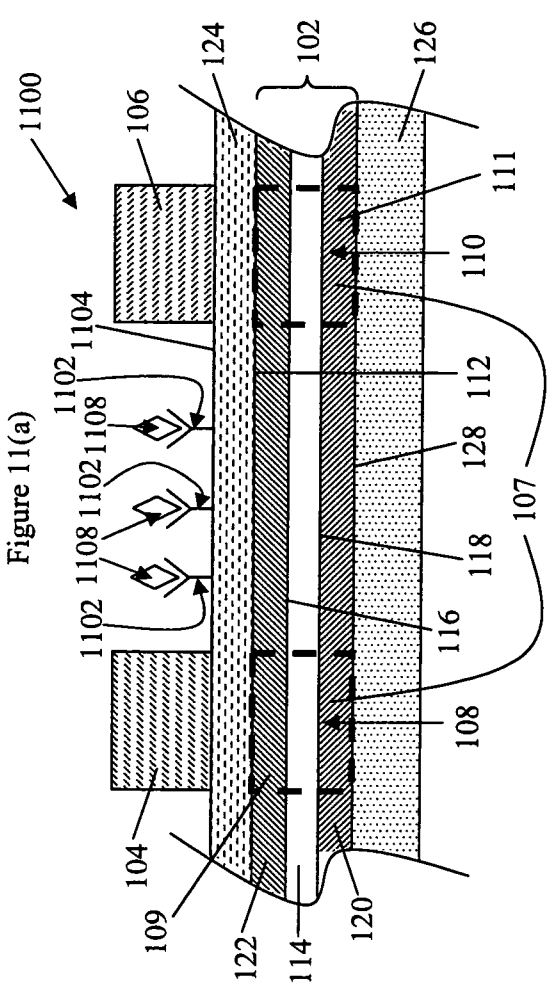

Figure 11(c)

INTERNATIONAL SEARCH REPORT

International application No
PCT/SG2010/000035

A. CLASSIFICATION OF SUBJECT MATTER
INV. G02B6/12 G02B6/00 G01N21/25

According to International Patent Classification (IPC) or to both national classification and IPC

B. FIELDS SEARCHED

Minimum documentation searched (classification system followed by classification symbols)
G02B G01N

Documentation searched other than minimum documentation to the extent that such documents are included in the fields searched

Electronic data base consulted during the international search (name of data base and, where practical, search terms used)

EPO-Internal

C. DOCUMENTS CONSIDERED TO BE RELEVANT

Category*	Citation of document, with indication, where appropriate, of the relevant passages	Relevant to claim No.
	[illegible] AUSBIO [illegible] LTD [AU]; BAZYLENKO M[illegible] 3 November 2005 (2005-11-03) page 4, line 15 - page 5, line 19 page 6, lines 5-17 page 7, line 22 - page 8, line 30 page 11, lines 12-24 page 14, line 15 - page 16, line 7 page 18, lines 10-14 figures 4,9-12,14,15a-15n,16 -----	1-24
X	EP 1 939 955 A (SUISSE ELECTRONIQUE MICROTECH [CH]) 2 July 2008 (2008-07-02) paragraphs [0002], [0003], [0009], [0044], [4663], [0064], [0070] - [0074], [0087], [0088] figures 4A-5B,6A,8 -----	1-9, 15-21, 23-24
	-/--	

[X] Further documents are listed in the continuation of Box C. [X] See patent family annex.

* Special categories of cited documents :

"A" document defining the general state of the art which is not considered to be of particular relevance

"E" earlier document but published on or after the international filing date

"L" document which may throw doubts on priority claim(s) or which is cited to establish the publication date of another citation or other special reason (as specified)

"O" document referring to an oral disclosure, use, exhibition or other means

"P" document published prior to the international filing date but later than the priority date claimed

"T" later document published after the international filing date or priority date and not in conflict with the application but cited to understand the principle or theory underlying the invention

"X" document of particular relevance; the claimed invention cannot be considered novel or cannot be considered to involve an inventive step when the document is taken alone

"Y" document of particular relevance; the claimed invention cannot be considered to involve an inventive step when the document is combined with one or more other such documents, such combination being obvious to a person skilled in the art.

"&" document member of the same patent family

Date of the actual completion of the international search	Date of mailing of the international search report
15 March 2010	22/03/2010
Name and mailing address of the ISA/ European Patent Office, P.B. 5818 Patentlaan 2 NL - 2280 HV Rijswijk Tel. (+31-70) 340-2040, Fax: (+31-70) 340-3016	Authorized officer Fazio, Valentina

INTERNATIONAL SEARCH REPORT

International application No
PCT/SG2010/000035

C(Continuation). DOCUMENTS CONSIDERED TO BE RELEVANT

Category*	Citation of document, with indication, where appropriate, of the relevant passages	Relevant to claim No.
A	JP 62 183405 A (AGENCY IND SCIENCE TECHN) 11 August 1987 (1987-08-11) abstract -----	1,18
A	JP 05 158079 A (ALPS ELECTRIC CO LTD) 25 June 1993 (1993-06-25) abstract -----	1,18

INTERNATIONAL SEARCH REPORT

Information on patent family members

International application No
PCT/SG2010/000035

Patent document cited in search report	Publication date	Patent family member(s)	Publication date
WO 2005103652 A	03-11-2005	US 2006197960 A1	07-09-2006
EP 1939955 A	02-07-2008	US 2008181279 A1	31-07-2008
JP 62183405 A	11-08-1987	NONE	
JP 5158079 A	25-06-1993	NONE	