July 3, 1956 A. SCHNEIDER ET AL 2,752,608

FLUSH-VALVE BALL

Filed July 2, 1954

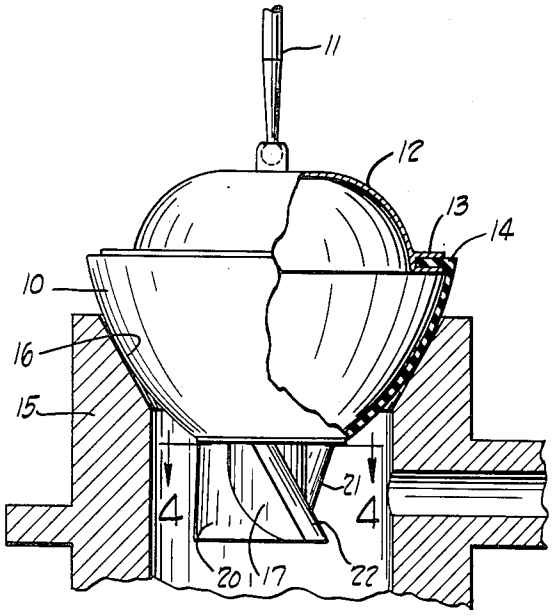

FIG. 1

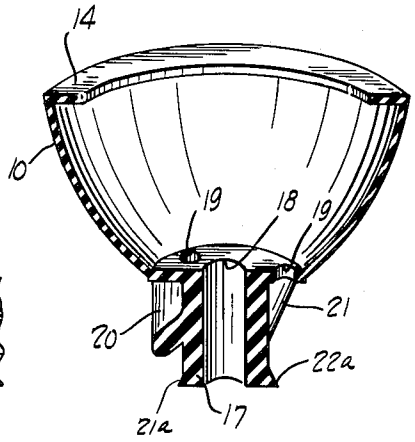

FIG. 2

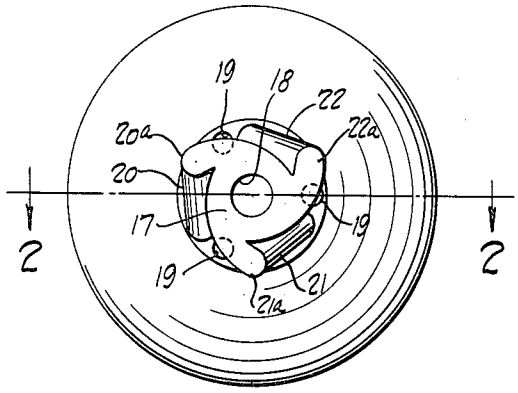

FIG. 3

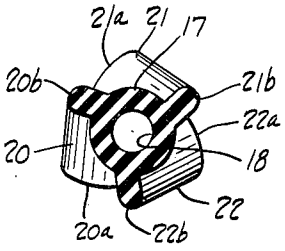

FIG. 4

INVENTOR.
ALBERT SCHNEIDER &
BY IRLIN BOTNICK
Sanford Schwarmacher
ATTORNEY

United States Patent Office

2,752,608

Patented July 3, 1956

2,752,608

FLUSH-VALVE BALL

Albert Schneider, University Heights, and Irlin Botnick, Cleveland, Ohio, assignors, by mesne assignments, to Irlin Botnick, Cleveland, Ohio

Application July 2, 1954, Serial No. 440,972

1 Claim. (Cl. 4—57)

This invention relates to ball valves for the flush tanks of toilets.

The primary object of this invention is to provide a ball valve for toilet flush tanks that operates with a wiping or rotative motion at the moment of sealing.

Another object is to provide a valve of the type stated having propeller blades formed integral therewith, which impart a rotative action to the valve when dropped into sealing position in the water flowing through the tank outlet.

A further object is to provide a ball valve having a replaceable seat engaging portion.

Still another object is to provide such a valve that has a plurality of orifices leading into the interior of the ball, which provide adequate drainage for the cavity while overcoming the resistance to floatation offered by balls having a single wide open mouth.

These and other objects of the invention will become apparent from a reading of the following specification and claim, together with the accompanying drawing, wherein like parts are referred to and indicated by like reference characters and wherein:

Figure 1 is a front elevation of the assembled ball valve that is the subject of this invention, together with its associated rod and seat, with portions broken away and in section to show the relation of the ball valve and seat when in sealing position;

Figure 2 is a sectional perspective view of the bottom portion of the ball valve taken along the line and in the direction of the arrows 2—2 of the Figure 3;

Figure 3 is a bottom plan view of the valve; and

Figure 4 is a cross sectional view of the stem and propeller blades taken along the line and in the direction of the arrows 4—4 of the Figure 1.

Conducive to a better understanding of this invention, it may be well to point out that the action of the conventional ball valve is such that upon release the ball falls directly downward into the valve seat. The ball therefore seats itself as it happens to strike the seat at the moment of contact. Any grit, sand or dirt on the seat is compressed between the flexible wall of the ball and the metal seat. If the foreign matter is large enough, an imperfect seal is formed resulting in a constant drip until the next flushing cycle. By providing structure on the ball that is acted upon, as it falls into place, by the water in the tank, rotation is imparted to the ball so that it meets the valve seat with a sweeping action that clears the seat of foreign matter just prior to closure. Furthermore, the provision of a replaceable bottom portion to the valve reduces the cost of maintenance, since the element that receives all the wear, that is the lower portion, can be easily and quickly attached to or removed from the permanent upper metal portion, as described hereinafter.

Referring more particularly to the drawing, Figure 1 shows the assembled ball valve made up of the upper or cap portion **12** and the flexible bottom portion **10** as it appears attached to a typical valve rod **11** in sealing position on a valve seat **16** of a flush tank outlet **15**.

The cap or upper closure portion **12** is semi-spherical in

shape with a flattened top. This closure portion is fabricated from a suitable rigid non-corrosive material such as copper, brass, aluminum or one of the plastic materials now available. An outwardly extending channeled flange **13** is formed integral therewith and extends entirely around the lower peripheral edge thereof. The cap has a threaded socket for the reception of the valve suspension rod **11**, which is common to all such flushing assemblies.

Reference numeral **10** indicates the convex bottom portion of the valve which is made of a flexible material, such as soft rubber, that may be easily deformed to adapt itself to the contours of its associated valve seat **16** as seen in Figure 1. The walls of the hollow bottom portion **10** are made relatively thin so that they may be easily flexed. An inwardly extending peripheral rim **14** is positioned at the top of the element **10** and formed integral therewith. This rim **14** is of substantially greater thickness than the side walls and acts as a stiffener for the bottom portion **10**. The diameter and width of the rim **14** is such that it will tightly and resiliently engage the channel **13** of the cap **12** when the upper and lower portions are joined to form the complete ball valve as seen in Figure 1. It will thus be seen that the bottom portion **10** of the ball, which receives all the wear, may be easily and economically replaced from time to time.

Referring more particularly to Figures 2, 3 and 4, it will be seen that the bottom portion **10** has a dependent stem **17** formed integral therewith at its vertical axis. This stem has a central bore **18** therethrough which communicates with the hollow interior of the valve.

Reference numerals **20**, **21** and **22** indicate propeller blades formed integral with the stem **17**. These blades extend both radially and vertically of the outer face of the stem **17**. In addition, the configuration of the blades is such that they extend spirally of the stem at an angle of approximately 30° to its long or central axis represented by the bore **18**. The upper ends **20***b*, **21***b* and **22***b* of the blades abut the bottom portion **10** at the stem **17**. Due to the angular disposition of the blades **20**, **21** and **22** the lower edges **20***b*, **21***b* and **22***b* are displaced circumferentially of the stem **17** with reference to the upper edges **20***a*, **21***a* and **22***a* respectively.

It will thus be evident that as the valve falls vertically through the water in the outlet **15**, during the sealing cycle, the upward thrust of the water against the blades **20**, **21** and **22** will cause them to be displaced laterally thus imparting a rotative motion to the valve ball.

In addition to the vertical angular disposition of the blades, they also are angularly disposed to the stem **17** in regard to their front and rear faces. By referring to Figures 3 and 4, it will be seen that the front or leading face of each blade forms an acute angle with the face of the stem **17**, while the rear or following face forms an obtuse angle therewith. Thus, water swirling through the valve opening **16** will be trapped between the leading faces of the blades and the stem, which will also impart a rotative reaction to the valve ball. Since the rear faces of the blades form obtuse angles with the stem, resistance to rotation is reduced to a minimum on the following faces, as the water can flow smoothly across them.

The structure just described provides a valve ball that will be rotated by water passing either at an angle to its axis of suspension or parallel thereto. The rotation of the ball will cause the ball to engage the valve seat **16** with a sweeping action that insures a positive seal at all times.

In addition to the central bore **18** through the stem **17**, there are openings **19** in the bottom portion **10** which also communicate with the interior of the ball. These openings are located between the propeller blades, as is seen most clearly in Figure 3. All these holes provide adequate drainage for the ball, while preventing too free

entrance of water when a certain degree of buoyancy is required during the flushing cycle.

It will now be clear that there is provided a device which accomplishes the objectives heretofore set forth. While the invention has been disclosed in its preferred form, it is to be understood that the specific embodiment thereof as described and illustrated herein is not to be considered in a limited sense as there may be other forms or modifications of the invention which should also be construed to come within the scope of the appended claim.

We claim:

A flush tank valve, comprising in combination, a flexible convex bottom portion, an upper closure portion, the said valve being hollow, a stem formed integral with said bottom portion and depending therefrom at the vertical axis thereof, and a plurality of propeller blades formed integral with said stem, extending radially and vertically

thereof at an angle of 30° to its long axis, with their upper ends abutting the bottom portion of the valve, the front and rear faces of each blade defining acute and obtuse angles, respectively, with reference to the face of the stem, the said stem having a central bore therethrough communicating with the interior of the hollow valve, the said bottom portion having openings therein located between the propeller blades.

References Cited in the file of this patent

UNITED STATES PATENTS

996,186	Willetts	June 27, 1911
1,001,621	Cornelius	Aug. 29, 1911
1,997,728	Heath	Apr. 16, 1935
2,015,614	Burnes	Sept. 24, 1935
2,436,035	Cheiten	Feb. 17, 1948