June 1, 1965 C. H. NYSTROM ETAL 3,186,396

APPARATUS FOR PREVENTING REVERSAL OF FUEL INJECTION ENGINES

Filed Nov. 5, 1963 2 Sheets-Sheet 1

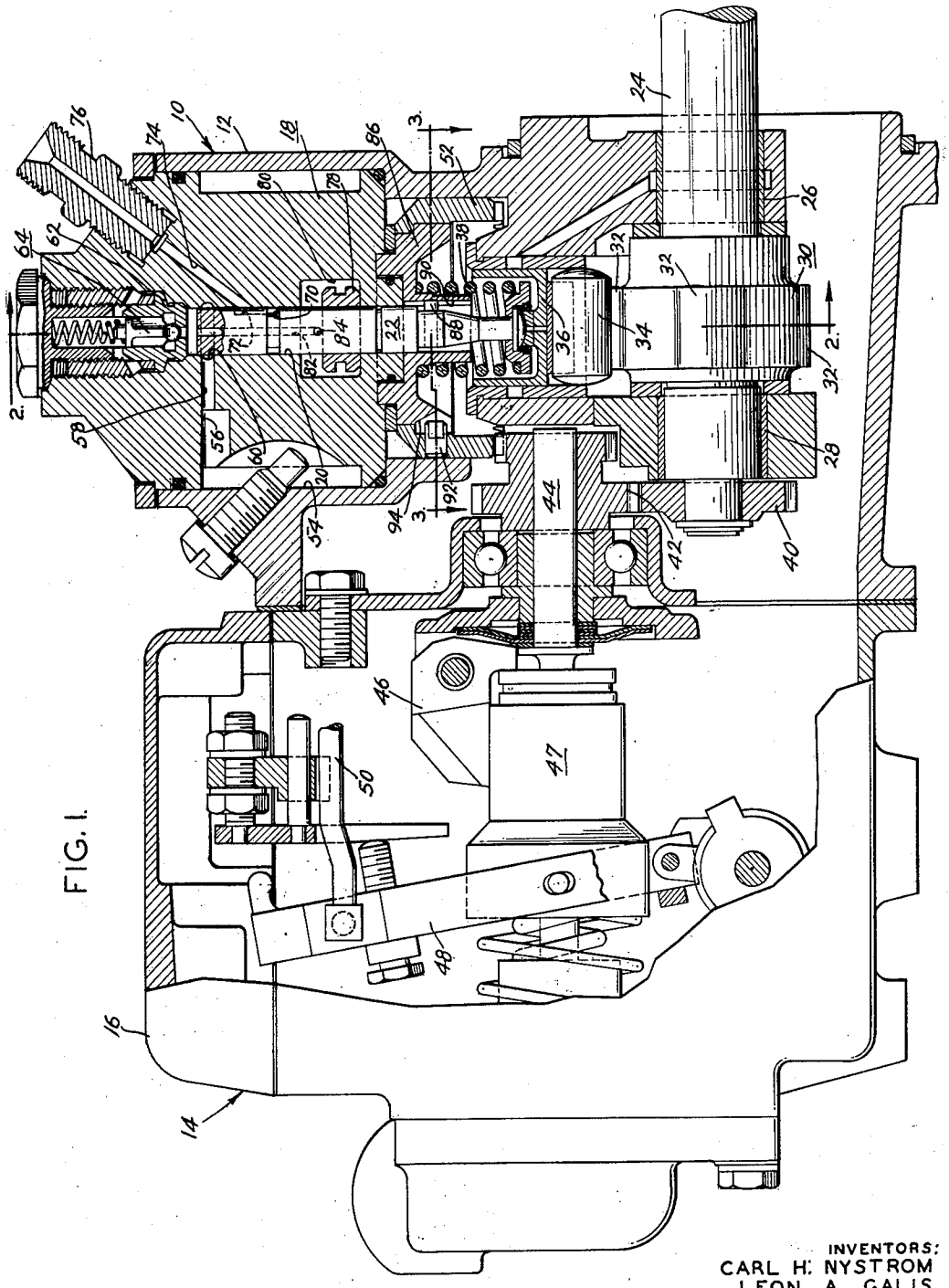

FIG. 1.

INVENTORS:
CARL H. NYSTROM
LEON A. GALIS

BY
Howson & Howson
ATTYS.

June 1, 1965 C. H. NYSTROM ETAL 3,186,396

APPARATUS FOR PREVENTING REVERSAL OF FUEL INJECTION ENGINES

Filed Nov. 5, 1963 2 Sheets-Sheet 2

FIG. 2.

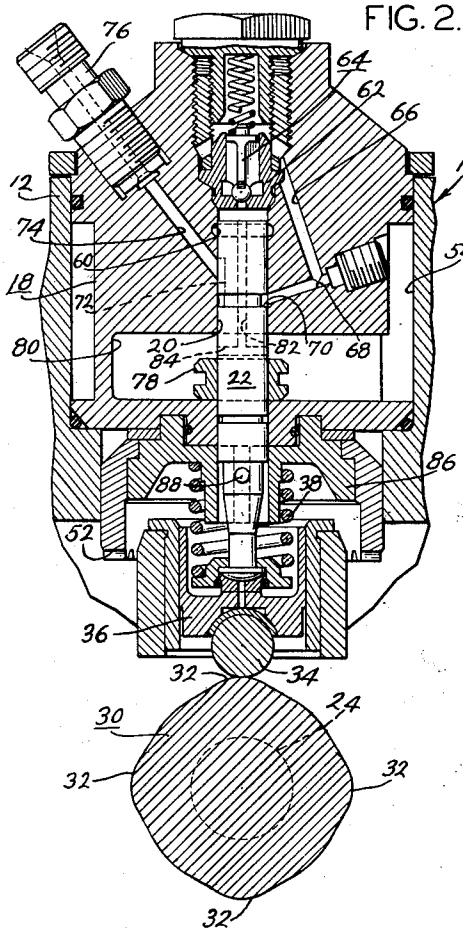

FIG. 3.

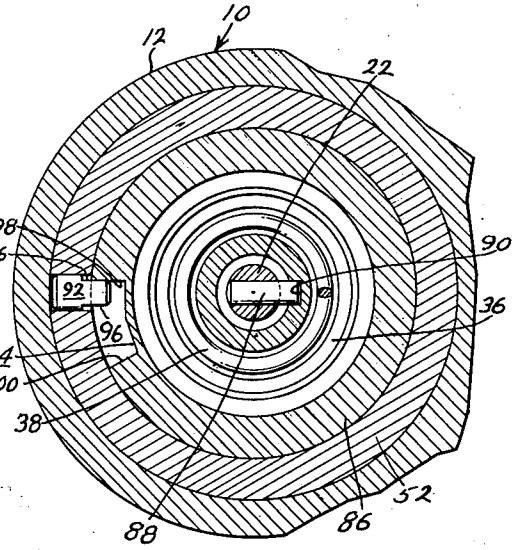

FIG 4.

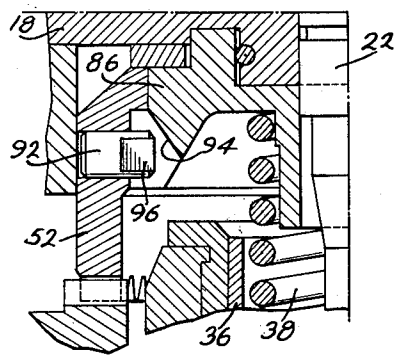

REVERSE ROTATION

FIG.6.

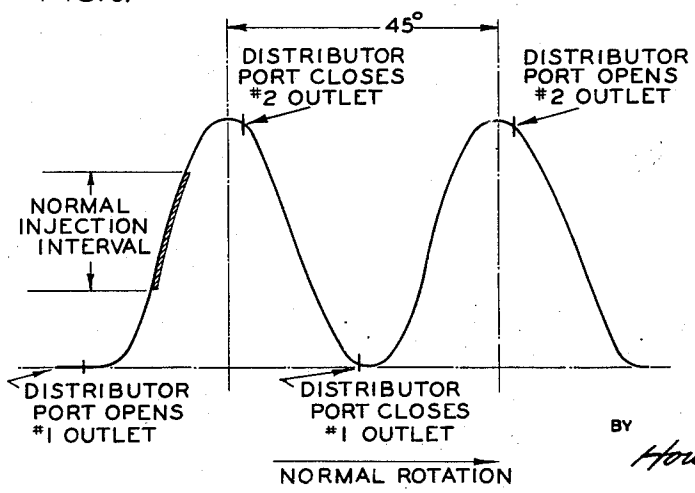

FIG.5.

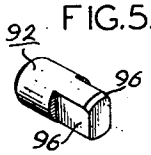

INVENTORS:
CARL H. NYSTROM
LEON A. GALIS

BY Howson & Howson

ATTYS.

United States Patent Office

3,186,396
Patented June 1, 1965

3,186,396

APPARATUS FOR PREVENTING REVERSAL OF FUEL INJECTION ENGINES

Carl H. Nystrom, West Springfield, and Leon A. Galis, Ludlow, Mass., assignors to American Bosch Arma Corporation, Springfield, Mass., a corporation of New York

Filed Nov. 5, 1963, Ser. No. 321,496
4 Claims. (Cl. 123—139)

The present invention relates generally to fuel injection apparatus for internal combustion engines and more particularly to a fuel injection pump construction which prevents engine reversal.

Since a fuel injection engine does not rely upon a carbureted fuel-air intake and a coordinated spark ignition for operation but requires only the compression of air and a properly timed injection of fuel, reverse operation is possible, and such operation can be initiated simply by reversing the direction of engine rotation. This may occur during starting upon rebound on failure to fire in the intended manner. In vehicles equipped with fuel injection engines, reverse rotation may occur should the engine stall and the vehicle coast backward with the engine in gear. Reverse operation of such engines may damage the engine as well as associated equipment, and it is thus desirable that means be provided to prevent such an occurrence.

It is accordingly a primary object of the present invention to provide a fuel injection pump for an internal combustion engine which prevents reverse operation of the engine.

A further object of the invention is to provide a fuel injection pump as described wherein the means for preventing reverse operation of the engine is internally embodied in the pump and which does not require the addition of external mechanisms.

An additional object of the invention is to provide a fuel injection pump as described wherein the means for preventing reverse operation of the engine is embodied in the drive means for rotating the pump plunger wherein the driving torque involved is of a relatively low value.

Another object of the invention is to provide a fuel injection pump as described which is exceptionally simple and economical to construct and assemble and which provides a positive and efficient anti-reversal operation.

Additional objects and advantages of the invention will be more readily apparent from the following detailed description of an embodiment thereof when taken together with the accompanying drawings in which:

FIG. 1 is a longitudinal sectional view of a fuel injection apparatus embodying the present invention;

FIG. 2 is a sectional view taken along line 2—2 of FIG. 1;

FIG. 3 is a sectional view taken along line 3—3 of FIG. 1 showing the details of the pump plunger drive;

FIG. 4 is an enlarged sectional view of the pump plunger drive;

FIG. 5 is a perspective view showing the drive pin of the pump plunger drive; and

FIG. 6 is a view showing the pump plunger phasing diagram.

The present invention is in the nature of an improvement upon the well known distributing-plunger type fuel

injection pump. Pumps of this type are characterized by a constant-stroke rotating plunger, the rotation of which effects the distribution of fuel to the passages leading to the respective cylinders. Specifically, a distributing port in the rotating plunger is sequentially aligned with each of a plurality of spaced outlet passages, the timing of the plunger rotation being such as to coordinate the fuel injection distribution with the compression strokes of the engine cylinders. It can be understood that a failure of the distributing slot to distribute fuel to the cylinders in the proper phase relationship would prevent operation of the engine. The present invention prevents reverse operation by incorporating in the fuel injection pump a drive means for rotating the distributing plunger which on reverse rotation of the engine effects an out-of-phase rotation of the plunger.

Referring to the drawings, FIG. 1 shows a type of fuel injection apparatus for incorporation with which the invention is adapted and illustrates an embodiment of the invention as applied to such apparatus. The apparatus includes a fuel injection pump **10** enclosed within housing **12** and an adjoining governor **14** within housing **16**. The pump **10** includes hydraulic head **18** having a central vertical bore **20** within which the pumping and distributing plunger **22** is slidably and rotatably disposed.

The pump is driven by a cam shaft **24** from the engine which is journalled in the housing **12** by the bearings **26** and **28**. The cam shaft includes cam **30** having cam lobes **32** as shown in FIG. 2. The cam lobes coact with the roller **34** of the tappet **36** to effect a reciprocating vertical stroke of the pumping and distributing plunger **22** in conjunction with the return spring **38**.

A drive gear **40** mounted on the cam shaft **24** is engaged with gear **42** on the governor shaft **44** to continuously drive the governor shaft in rotation. Mounted on the governor shaft are centrifugal weights **46**, the centrifugal action of which through a spring loaded linkage **47** affect the position of the fulcrum lever **48**. Pivotally connected with the upper end of the fulcrum lever **48** is the fuel control rod **50**, the position of which controls the fuel output of the fuel injection pump in a manner to be described further below.

The driven gear **42** on the governor shaft **44** in turn drives the face gear **52** which, in a manner to be described in further detail below, drives the pumping and distributing plunger **22** in rotation. The plunger **22** is thus continuously rotated at a rate corresponding with the speed of the engine.

The hydraulic head **18** includes a peripheral fuel sump **54** into which opens the fuel inlet passage **56** and inlet port **58**. The inlet port **58** connects with the annular slot **60** in the bore **20**, thus providing a fuel passage from the sump **54** into which fuel is delivered under pressure by a fuel supply pump (not shown), into the plunger bore. The fuel on reaching the bore **20** is forced by the upward movement of the plunger **22** through the check valve **62** of the delivery valve assembly **64**. The fuel flows through the delivery valve assembly through the passages **66** and **68** and into the annulus **70** of the plunger **22** which connects with the distributor port **72** as shown in FIG. 2. The rotation of the plunger **22** is timed to position the distributor port **72** in alignment with an outlet passage **74** leading into an outlet **76** for delivery of fuel to a cylinder nozzle in the proper phase relationship to the engine cycle.

The amount of fuel delivered by the pump is controlled by the sleeve 78 which is vertically positioned along the plunger 22 within spill sump 80 by the fuel control rod 50 (connection not shown). An axial hole 82 in the plunger extends from the upper end thereof to the transverse spill hole 84 which serves to release the fluid pressure on the check valve 62 to close the valve when the spill hole clears the upper edge of the sleeve 78. It can thus be understood that a higher sleeve position will delay the opening of the spill hole and thus by increasing the period during which the check valve is open provide an increased delivery of fuel to the cylinder. Conversely, a lowered sleeve position will result in a decreased fuel delivery.

As described above, the plunger 22 is continuously rotated to align the distributor port 72 successively with the several outlet passages communicating with the bore 20. The manner in which rotation of the plunger is effected is a primary aspect of the present invention, the above-described pump structure being well known in the art.

A hub 86 rotatable within the face gear 52 is secured for rotation with the plunger 22 by means of pin 88 in the plunger slidably coacting with the slot 90 in the hub bore. As shown most clearly in FIGS. 3 and 4, the face gear 52 is provided with a drive pin 92 extending radially inwardly therefrom into the drive slot 94 of the hub 86. The drive pin 92, as shown most clearly in FIG. 5, is characterized by flat vertical faces 96 for coaction with the flat ends 98 and 100 of the drive slot 94.

In the position illustrated in FIG. 3, with the face gear rotating in the normal clockwise direction, the drive pin 92 engages the end 98 of the drive slot 94 such that the hub 86 is driven by and rotates with the face gear 52 to provide the correct phase relationship of the fuel injection pump output.

With the face gear 52 rotating in a clockwise manner and the drive pin 92 engaging the end 98 of the slot 94, the engine is operating in the correct direction with the distributor port 72 opening the outlet passages in the manner indicated by the phasing diagram of FIG. 6. From this diagram it may be seen that during normal rotation the distributor port opens and closes the outlet passages when the plunger is at the bottom of its stroke.

Upon reverse rotation of the engine, the face gear on rotating counter-clockwise causes the drive pin 92 to engage the opposite end 100 of the drive slot 94, thereby changing the phase relationship of the plunger rotation to the plunger pumping stroke. Referring to the upper portion of the phasing diagram of FIG. 6, it may be seen that when the engine and pump are in reverse rotation the distributor port opens and closes the outlet passages at the top of the plunger stroke. The exact point at which the distributor port opens and closes the outlet passages is of course dependent upon the angular length of the drive slot 94 which in the illustrated embodiment is approximately half of the 45° cycle length of the plunger. It can be understood that changing the phase relationship so that fuel is not injected into the cylinders at the normal injection points in the cycle will prevent operation of the engine. Thus, the invention provides an extremely simple and inexpensive arrangement for positively insuring against engine reversal without interfering with normal engine operation.

Manifestly, changes in details of construction can be effected by those skilled in the art without departing from the spirit and the scope of the invention as defined in and limited solely by the appended claims.

We claim:

1. In a fuel injection pump including a hydraulic head having a bore therein, a pumping and distributing plunger rotatably and slidably disposed within said bore, plunger drive means for driving said plunger in rotation and reciprocation, said plunger drive means comprising a drive shaft and separate gearing between said drive shaft and said plunger for reciprocating said plunger and for rotating said plunger in a certain phase relation with reciprocation thereof when said drive shaft is operating in one direction, and wherein the rotation of the plunger distributes fuel to outlet passages connected with said bore, the improvement comprising means in said separate gearing for rotating said plunger from said drive shaft to alter the phase relation between reciprocating and rotating motion of said plunger when said drive shaft is operating in the opposite of said one direction.

2. In a fuel injection pump including a hydraulic head having a bore therein, a pumping and distributing plunger rotatably and slidably disposed within said bore, plunger drive means for driving said plunger in rotation and reciprocation, said plunger drive means comprising a drive shaft and separate gearing between said drive shaft and said plunger for reciprocating said plunger and for rotating plunger in a certain phase relation with reciprocation thereof when said drive shaft is operating in one direction, and wherein the rotation of the plunger distributes fuel to outlet passages connected with said bore, the improvement comprising means in said separate gearing for rotating said plunger from said drive shaft to alter the phase relation between reciprocating and rotating motion of said plunger when said drive shaft is operating in the opposite of said one direction, said means including first and second operatively engaged positive drive elements for driving said plunger in rotation, said drive elements having engagement means which upon reversal of said plunger drive means provides an angular translation of the drive elements and a consequent shift of the phase relationship of the rotary and reciprocatory plunger motions.

3. In a fuel injection pump including a hydraulic head having a bore therein, a pumping and distributing plunger rotatably and slidably disposed within said bore, plunger drive means for driving said plunger in rotation and reciprocation, said plunger drive means comprising a drive shaft and separate gearing between said drive shaft and said plunger for reciprocating said plunger and for rotating said plunger in a certain phase relation with reciprocation thereof when said drive shaft is operating in one direction, and wherein the rotation of the plunger distributes fuel to outlet passages connected with said bore, the improvement comprising means in said separate gearing for rotating said plunger from said drive shaft to alter the phase relation between reciprocating and rotating motion of said plunger when said drive shaft is operating in the opposite of said one direction, said means comprising a first drive element connected with said plunger for rotation therewith, a second drive element rotatably disposed adjacent said first drive element, said second drive element being in operative engagement with said plunger drive means for rotation thereby, a drive member extending from one of said drive elements, and a slot in the other of said drive elements coacting with said drive member, whereby said drive member during normal rotation of said pump drive means engages a first end of said drive slot to drive said plunger in rotation in the proper phase relationship with respect to the reciprocation of said plunger, said drive member on reverse rotation of said pump drive means engaging a second opposed end of said drive slot thereby driving said plunger in rotation in an inoperative phase relationship.

4. In a fuel injection pump including a hydraulic head having a bore therein, a pumping and distributing plunger rotatably and slidably disposed within said bore, plunger drive means for driving said plunger in rotation and reciprocation, said plunger drive means comprising a drive shaft and separate gearing between said drive shaft and said plunger for reciprocating said plunger and for rotating said plunger in a certain phase relation with reciprocation thereof when said drive shaft is operating in one direction, and wherein the rotation of the plunger distributes fuel to outlet passages connected with said bore, the improvement comprising means in said separate gear-

ing for rotating said plunger from said drive shaft to alter the phase relation between reciprocating and rotating motion of said plunger when said drive shaft is operating in the opposite of said one direction, said means comprising a hub secured to said plunger for rotation therewith, a face gear on said hub rotatable with respect to said hub, said face gear operatively engaged for rotation by said plunger drive means, a drive pin extending radially inwardly from said face gear, and a slot in said hub to receive said drive pin, said drive pin during normal rotation of said face gear engaging a first end of said drive slot to drive said plunger in rotation in the proper phase relationship with respect to the reciprocation of said plunger, said drive pin on reverse rotation of said face gear engaging a second opposed end of said drive slot thereby driving said hub and said plunger in rotation in an inoperative phase relationship.

References Cited by the Examiner

UNITED STATES PATENTS

1,918,075	7/33	Woolson	123—139
2,641,238	6/53	Roosa	123—139
2,965,087	12/60	Bischoff et al.	123—140

FOREIGN PATENTS

824,259	11/37	France.
716,510	10/54	Great Britain.
776,387	6/57	Great Britain.

RICHARD B. WILKINSON, *Primary Examiner.*