July 21, 1959 J. R. DUFFY ET AL 2,896,004

ELECTRIC HEATING FURNACE AND METHOD OF HEATING

Filed March 5, 1956 2 Sheets-Sheet 1

Fig. 1

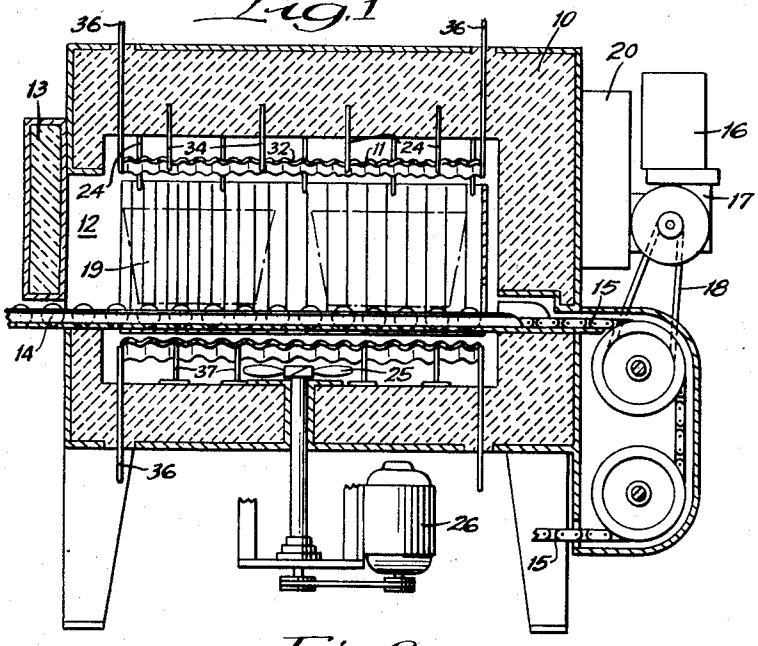

Fig. 2

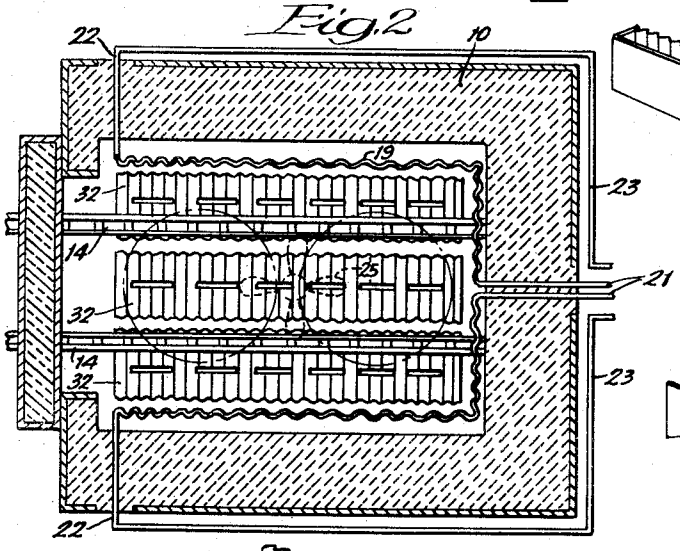

Fig. 3

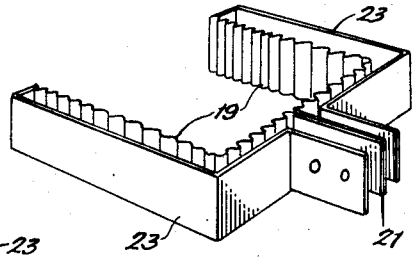

Fig. 5

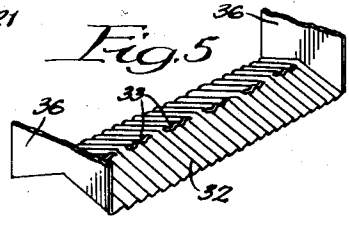

Fig. 4

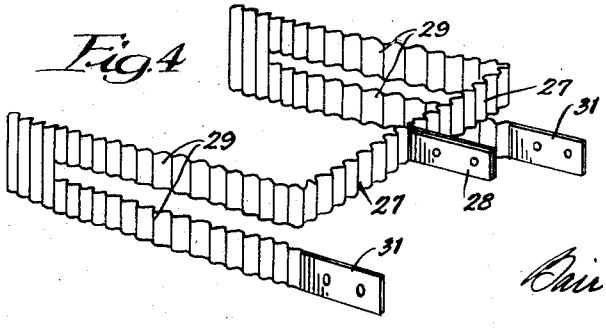

Fig. 6

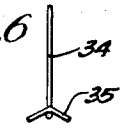

INVENTORS:
John R. Duffy,
George W. Holz and
BY August W. Littlenberg,
Cain Freeman & Molinare
ATTORNEYS.

July 21, 1959 J. R. DUFFY ET AL 2,896,004

ELECTRIC HEATING FURNACE AND METHOD OF HEATING

Filed March 5, 1956 2 Sheets-Sheet 2

Fig. 7

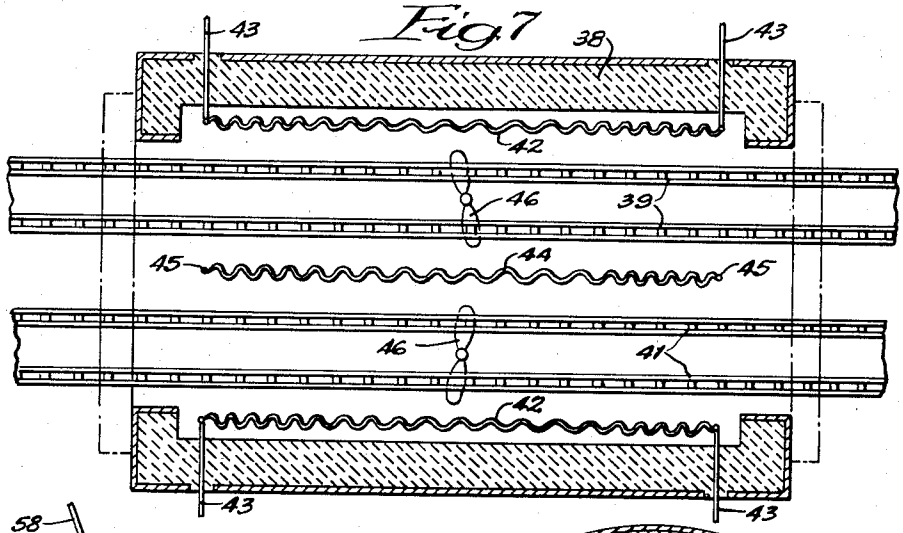

Fig. 10

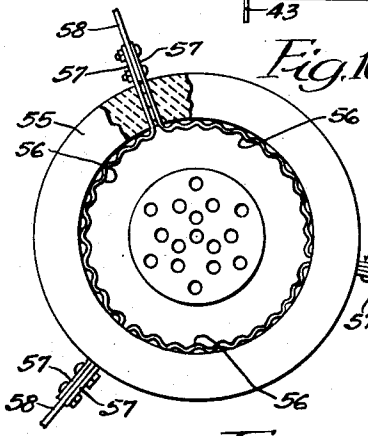

Fig. 8

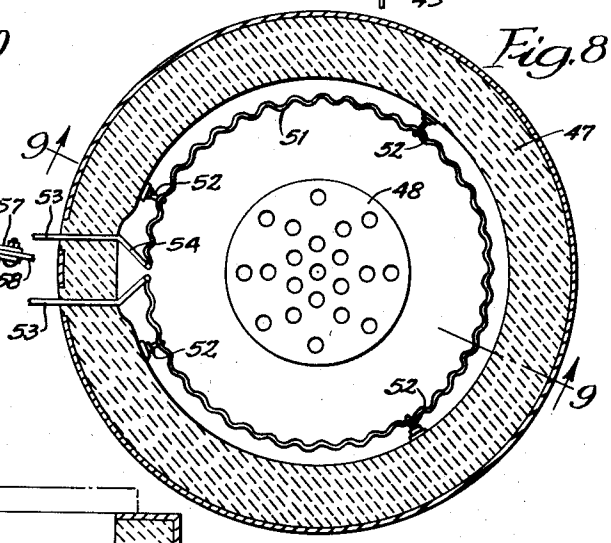

Fig. 9

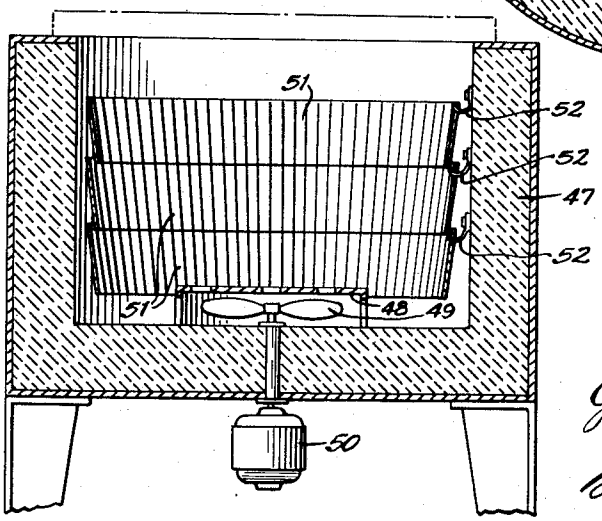

INVENTORS:
John R. Duffy,
George W. Holz and
BY August W. Littlenberg,
Blair Freeman & Molinare
ATTORNEYS.

United States Patent Office 2,896,004 Patented July 21, 1959

2,896,004

ELECTRIC HEATING FURNACE AND METHOD OF HEATING

John R. Duffy, Northbrook, and George W. Holz and August Wilford Lillienberg, Chicago, Ill., assignors to Lindberg Engineering Company, Chicago, Ill., a corporation of Illinois

Application March 5, 1956, Serial No. 569,549

20 Claims. (Cl. 13—22)

This invention relates to electric heating furnaces and method of heating, and more particularly to electrical resistance heating type heat treating or melting furnaces.

It has been the usual practice heretofore in resistance-type furnaces to provide a plurality of relatively small heating elements in spaced relation in the furnace heated by the flow of electric current therethrough. Such elements require a relatively high voltage, which raises electrical insulation problems and problems of current leakage through the brickwork or refractory lining of the furnace. High voltage further creates the possibility of damage to the work in the event it should contact the elements or of injury to personnel.

Another difficulty encountered is maintenance of the desired heat distribution in the furnace and particularly in a heat treating furnace in which hot gases in the treating chamber are circulated by gravity or by a fan or the like.

It is one of the objects of the present invention to provide an electric heating furnace in which resistance heating elements are employed operating at very low voltage.

Another object is to provide an electric heating furnace in which relatively large flat heating elements extend over a large area of the furnace wall to produce a uniform heating effect.

Still another object is to provide an electric heating furnace in which the heating elements are formed by corrugated sheets or strips mounted adjacent to the furnace wall.

According to one feature of the invention, the corrugations in the sheets or strips may be varied in different portions thereof to obtain the desired heat balance in the furnace. For example, the corrugations may be made deeper or more closely spaced adjacent openings in the furnace or other points of high heat loss.

According to another feature, the corrugated sheets are spaced from the furnace walls to define therewith channels for controlled circulation of hot gases within the furnace chamber.

Yet another object is to provide a furnace in which corrugated heating elements are supported in spaced relation to the roof and floor of the furnace for circulation of gas therearound.

A further object of the invention is to provide an electric heating furnace in which a plurality of spaced parallel sheets or strips define a plurality of parallel paths of travel through the furnace for material to be heated. By energizing the different strips differently the temperatures in the paths may be maintained at different levels in this way without requiring complete separation of the paths.

A still further object is to provide an electric heating furnace of the pot-type in which the heating elements are in the form of annular strips or rings corrugated to enable the use of strips of a given length and transformers of the same size in furnaces of different sizes.

A still further object is to provide an electric heating

furnace in which the heating elements are in the form of a plurality of conical rings with their adjacent edges overlapping vertically but spaced horizontally.

Still another object is to provide an electric heating furnace in which the heating element rings are formed of at least three arcuate strips mounted end to end with terminals at their ends extending outward through the furnace wall.

A further object is to provide a method of heating in which the electric voltage employed is below the value at which the electrical insulating properties of the furnace will break down.

The above and other objects and features of the invention will be more readily apparent from the following description when read in connection with the accompanying drawings, in which:

Figure 1 is a vertical section through a heat treating furnace embodying the invention;

Figure 2 is a horizontal section through the furnace of Figure 1;

Figure 3 is a prespective view of the heating element of the furnace of Figures 1 and 2;

Figure 4 is a perspective view of an alternative form of heating element;

Figure 5 is a perspective view of a heating element for use in the top and bottom of the furnace;

Figure 6 is an elevation of a hanger for a top heating element;

Figure 7 is a horizontal section through a multiple path furnace embodying the invention;

Figure 8 is a horizontal section through a pot-type furnace embodying the invention;

Figure 9 is a section on the line 9—9 of Figure 8; and

Figure 10 is a top plan view with parts in section of a pot-type furnace utilizing an alternative form of heating element.

The furnace, as shown in Figures 1 to 3, is a heat treating furnace which is of conventional construction except for the heating elements employed therein. As shown, the furnace comprises a body **10** formed of heat resistant material such as refractory brickwork or ceramic material which may be covered if desired. The body **10** provides a treating chamber **11**, which is open at one end, as indicated at **12**, with a door **13** to close the opening **12** during operation of the furnace.

Material to be treated may be fed into the furnace over roller conveyors **14** and may be supported on the conveyors during the treating operation. The material may be moved into or out of the furnace by power driven feeding means, shown as including a chain **15** driven through a motor **16**, a reducer **17**, and suitable power transmission mechanism, such as a belt **18**.

The furnace chamber is heated by electric resistance elements mounted in the chamber and energized from an external transformer or the like, indicated at **20**. According to the present invention, the heating elements are in the form of sheets or strips **19** extending along the sides and across the closed back of the furnace and connected at their opposite ends to terminals extending through the furnace wall. As shown, there are two heating elements, each of which extends along one side and across half of the back of the furnace to terminals **21**, which may be formed by bending outward the ends of the strip to extend through the ceramic furnace body but which are preferably separate and thicker pieces welded to the strips. At the opposite ends of the elements the strips are welded to terminals **22** extending through the furnace wall and connected through bus bars **23** to the transformer. When the transformer is energized, current will flow through the strips **19** to heat them and since the strips extend substantially the full length of the furnace walls, the heat will be distributed

uniformly throughout the furnace. As shown in Figure 1, the resistance elements extend from a point slightly above the conveyor structure **14** to a point slightly below the top of the furnace chamber so that they are substantially coextensive vertically with the material to be heated. The resistance elements may be supported in any desired manner in the furnace, as for example, by hangers **24** hooked into the upper edges of the heating elements and suspended within the furnace.

According to one important feature of the invention, the sheets or strips **19** are corrugated, as shown, to enable a greater length of sheet or strip to be mounted in a furnace of a given size, thereby to increase the effective resistance without reducing the cross section. The corrugations have another advantage in that the strips may be variably corrugated in different portions of their length to produce greater heating at desired locations. For example, as shown in Figures 1 to 3 the corrugations may be spaced more closely adjacent to the openings **12** to compensate for heat loss through the opening and to maintain the temperature uniform within the furnace chamber.

The use of sheet or strip resistance elements is also highly advantageous in controlling the circulation of hot gases through the furnace to heat the material to be treated effectively. As best seen in Figure 2, the sheets or strips **19** are mounted adjacent to, but spaced from, the chamber walls to define with the chamber walls channels for circulation of gas. The gases in the furnace will tend to circulate through these channels in intimate contact with the strips or sheets, thereby to be easily heated and to impart heat to the material in the chamber as they circulate. Circulation of the gases may be assisted by a fan or blower **25** mounted in the lower part of the furnace and driven by a motor **26** outside of the furnace. The fan may cause the gases to circulate in either direction, but preferably draws the air downward through the center of the chamber over the work and causes it to flow upward between the resistance elements and furnace walls in the same direction as gravitational flow.

Figure 4 illustrates a modified construction of heating element which brings all of the terminals out at the rear of the furnace without the necessity of utilizing bus bars **23**. In this construction the heating element is formed of relatively narrow strips **27**, which extend from a center common terminal **28** across the back of the furnace, and side strips **29**, which extend along the sides of the furnace.

The side strips **29** are split longitudinally, as shown, from their rear ends almost, but not completely, to their front ends to provide upper and lower strips of substantially the same width as the strips **27** integrally connected at the front end of the furnace. The lower strips at the sides terminate in terminals **31** which may extend out through the back wall of the furnace adjacent to the center terminal **28** for easy connection to a transformer or other source of power. Otherwise, the construction of Figure 4 is the same as that of Figures 1 to 3 and functions in the same manner.

In many cases it is desirable to provide additional heating elements at the top or the bottom or both of the furnace. For this purpose, corrugated metal sheets **32** are provided and are formed with a series of spaced slots **33** extending lengthwise down the center lines thereof. The slots **33** enable the sheets **32** to be bent into a V-section without warping and further provide for circulation of gas through the sheets and for easy attachment of hangers thereto.

The mounting in the top of the furnace, hangers are employed as shown in Figure 6 having a shank **34** and a V-shaped relatively narrow head **35** rotatable on the shank. To mount a sheet **32** in the top of the furnace, the shanks **34** are anchored in the roof of the furnace and the heads **35** are turned to a position parallel to the slots **33**, in which position they can pass through the slots **33**. After the sheet **32** is raised above the heads **35**, the heads are turned at right angles to the slots and the sheet is lowered to be supported on the heads.

The ends of the sheets **32** may be welded to terminals **36** shaped to fit against the ends of the sheets and to extend through the furnace top or bottom walls. The terminals may be connected to the transformer **20** or to any other desired source of power.

For bottom mounting, sheets **32** may be supported in spaced relation to the furnace floor on stools **37** as shown in Figures 1 and 2. In this case the terminals **36** will extend downward rather than upward as seen in Figure 5 so that the apex of the V-section is up.

A plurality of sheets **32** may be mounted in parallel spaced relation at each the top and bottom of the furnace to cover substantially the entire furnace area or the sheets could be spaced and positioned as desired. In either case, the sheets **32** will radiate heat onto the work and will provide for circulation of gas around them due to their spacing and to the slots **33** therein.

The relatively large sheet or strip heating elements such as **19**, **29** and **32** present numerous advantages. Since they constitute relatively large elements, a minimum number of elements is required for a furnace of a given size thereby minimizing mounting difficulties and number of terminals. The sheets may cover substantially all of the area around the work so that heat is radiated onto the work from all directions and no cold spots are developed. Also the sheets or strips form effective chimneys with the surrounding furnace walls through which gas within the furnace circulates to be effectively and uniformly heated to assist in maintaining a uniform temperature in the furnace.

Another important advantage is that the relatively large cross sectional area of the sheets or strips enables the furnace to be operated at very low voltage, on the order of ten to twenty-five volts. This simplifies installation from the standpoint of insulating the elements from each other and from other furnace parts and minimizes the hazard to personnel and to the parts being treated in the event they should closely approach or contact an element. The voltage source is therefore designed to deliver very low voltage on the order of ten to twenty-five volts and sufficient amperes to bring the elements up to the desired heat.

Still more importantly, the use of low voltage reduces or eliminates the possibility of electrical breakdown of the brickwork or other refractory between the terminals at the points where they enter the furnace. When the brickwork or refractory is new and clean, it provides excellent electrical insulation as well as good heat insulation. However, after a period of use and particularly in carburizing furnaces, the brickwork or refractory will become impregnated with soot or carbon to a depth of several inches and its electrical insulating value is very materially reduced. Surface soot can easily be cleaned away and does not present a serious problem but the soot which soaks into the brickwork or refractory cannot be removed.

When relatively high voltages on the order of one hundred volts or more are used, as is conventional, it has been found that current leakage between the terminals through the brickwork or refractory will occur after a relatively short time of use and the only known remedy is to replace the brickwork or refractory. Not only does use of lower voltage reduce the tendency for leakage but we have found that there is a critical voltage value below which the insulating characteristics of the brickwork or refractory will not break down even though it is soaked with soot or carbon. Our experiments show that at voltages of about twenty-five volts or less the brickwork or refractory will maintain its electrical insulating properties indefinitely whereas at higher voltages the elec-

trical insulating properties of the brickwork or refractory breakdown after a relatively short period of use.

The exact reasons for this are not fully understood. It is believed, however, that when the porous brickwork or refractory becomes impregnated, the small voids therein become coated or filled with soot or carbon without creating a continuous path through the soot or carbon. The higher voltages will jump or break down the very short insulating spaces between adjacent bodies or particles of soot or carbon whereas voltages on the order of twenty-five volts or less will not break down even these short gaps.

Figure 7 illustrates a furnace for continuous treating of material in a plurality of separated paths. The furnace, as shown, comprises a chamber **38** open at both ends and having a pair of conveyors **39** and **41** extending therethrough from end to end. Separate parts or bunches of material to be treated may be passed through the furnace on the separate conveyors for simultaneous heat treatment.

The furnace is heated by a pair of side heating sheets or strips **42** extending along the opposite sides of the furnace in spaced relation thereto and having terminals **43** at their ends extending through the furnace side walls for connection to source of heating current. The strips **42** are corrugated in the same manner as the strips **19** of Figures 1 to 3 and may have the corrugations more closely spaced adjacent the ends than in the center portions to compensate for heat loss through the openings at the ends. Between the two conveyors **39** and **41** a heating sheet or strip **44** is mounted registering with the strips **42** and similarly corrugated. The strip **44** may be connected to terminal posts **45** extending vertically through either the top or bottom of the furnace for connection to a power source. Hot gases may be circulated around the material in the furnace and the heating strips by fans **46** positioned below the conveyors. The strip **44** may be a single strip, as shown, or may be two spaced strips energized at different temperatures to separate the two treating zones more effectively.

As material passes through the furnace on the conveyors it will be subjected to radiation from the heating elements at the opposite sides of the conveyors and to convection heating by the circulation of hot gases thereover. In this construction, if desired, the material passing through the different paths may be subjected to different temperatures by energizing the heating elements **42** with different voltages or by using elements of different sizes. The heating strip **44** in this case not only serves as a source of heat, but also as a barrier between the two conveyor paths which may be heated to a temperature intermediate the temperatures of the strips **42**. The strip **44**, whether single or double, is of a height greater than the work to separate the two paths effectively. In this way a higher temperature may be maintained around one of the conveyors than around the other to perform different heat treating operations simultaneously in the same furnace.

Figures 8 and 9 illustrate application of the invention to a pot or box type furnace, including a cup-shaped refractory body **47** open at its top and supported on legs or recessed into the floor, as desired. A perforated supporting plate **48** is provided spaced from the bottom of the furnace chamber upon which the material or containers for material to be treated may rest. Preferably, a circulating fan **49** is mounted beneath the plate **48** and is driven by a motor **50** to maintain a forced circulation of air within the furnace.

The furnace is heated by an elongated tubular heating element substantially coextensive vertically with the furnace chamber to heat the work therein. As shown, the heating element is formed by a plurality of separated rings **51**, each of which is formed of corrugated sheet material with the rings being vertically spaced to cover substantially the entire inner wall of the furnace chamber. The rings may be separately supported by hooks **52** suspended from the inner wall of the chamber.

The rings **51** are separated at their ends as shown in Figure 8 and are energized through terminals having straight parallel portions **53** extending through the wall of the body and angular portions **54** welded to the ends of the ring. By providing the angular portions **54** the ends of the rings can be brought close together to eliminate cool spots in the furnace while maintaining the terminal portions **53** widely spaced where they go through the furnace body for better electrical insulation and to provide more space around the terminals for connection to bus bars and the like.

One big advantage in the use of corrugated heating elements in a pot or box type furnace, either for heat treating or for melting, is that elements of the same length and utilizing the same transformer may be mounted in furnaces of different sizes merely by varying the corrugations in the strips. Conversely, the length of the elements, and hence their resistance, may similarly be varied to vary the heat input from a given transformer. This feature enables greater standardization of transformers and minimizes the number of different lengths of heating elements which are required for a range of furnace sizes.

In heat treating furnaces, the rings **51** are spaced inward from the furnace wall, as shown in Figure 8, for circulation of hot gases through the channels defined between the elements and the furnace wall. When a plurality of strips are used, there is a tendency for the hot gases to leak between the adjacent strips with loss of efficiency. To minimize this effect, as best shown in Figure 9, the several rings **51** are made of conical shape and are mounted with their adjacent edges in vertically overlapping relationship but spaced slightly horizontally to be electrically separated from each other. With this construction, as the gases flow upward between the rings and the furnace wall, the tendency for leakage between the rings is minimized and maximum efficiency is achieved. In melting furnaces, the rings may, of course, be placed closely adjacent to the wall and vertical spacing between them is not critical.

Figure 10 illustrates an alternative element construction for a pot-type furnace. As shown therein, the furnace comprises a cylindrical cup-shaped body **55** open at its top and closed at its bottom. The heating elements are in the form of arcuate vertically corrugated strips **56**, at least three strips being arranged in end to end relationship being provided to form a complete ring. At their ends the strips **56** are bent outward to form terminals **57** extending radially outward through the furnace wall and preferably spaced apart at their outer ends. Bus bars **58** or similar connecting elements may be placed between adjacent terminals **57** and secured thereto by bolts or the like.

In this construction the heating elements are easily placed and are easily replaced, if necessary, since each ring is in the form of a plurality of segments capable of separate handling. If it should be necessary to replace a segment, for example, the bus bars connected thereto may be detached and the terminals **57** may be pulled inward through the furnace wall without disturbing any other segments or rings, the strip bending sufficiently to enable this to be accomplished. A new segment can easily be inserted by extending the terminals thereon through the openings in the furnace wall and reconnecting to the bus bars. After replacement of a terminal strip in this manner, refractory cement is preferably packed around the strip to eliminate any possibility of leakage therepast.

While several embodiments of the invention have been illustrated and described in detail, it will be understood that these are illustrative only and are not to be taken as a definition of the scope of the invention, reference being had for this purpose to the appended claims.

What is claimed is:

1. An electric heating furnace comprising a hollow body defining a chamber to receive material to be heated, a thin strip of conductive material formed with a series of parallel corrugations therein transverse to the length of the strip mounted in the chamber adjacent to and spaced from the wall thereof, and terminals connected to the ends of the strip and extending out through the wall of the chamber for connection to a source of power.

2. An electric heating furnace comprising a hollow body defining a chamber to receive material to be heated, a thin strip of conductive material formed with a series of vertically extending corrugations therein mounted in the chamber adjacent to but spaced from a side wall thereof, the space between the corrugated strip and the wall defining a vertical channel for the circulation of heated gas in the chamber, and terminals connected to the ends of the strip and extending through the chamber wall for connection to a source of power.

3. An electric heating furnace comprising a hollow body defining a chamber to receive material to be heated, a thin strip of conductive material formed with a series of vertically extending corrugations therein mounted in the chamber adjacent to but spaced from a side wall thereof, the space between the corrugated strip and the wall defining a vertical channel for the circulation of heated gas in the chamber, terminals connected to the ends of the strip and extending through the chamber wall for connection to a source of power, and a fan in the chamber to create a circulation of heated gas through the chamber and said channel.

4. The construction of claim 1 in which the corrugations are closer together at certain parts of the sheet than at other parts to effect a desired heat distribution in the chamber.

5. An electric heating furnace comprising a hollow body defining a chamber to receive material to be heated, a plurality of vertically spaced strips of conductive material lying generally vertically adjacent the side wall of the chamber, and spaced at their adjacent edges to be electrically separated from each other, the strips being formed with vertically extending corrugations and being spaced from the chamber wall to provide therebetween vertical channels for the circulation of hot gases and terminals connected to the strips and extending through the wall of the chamber for connection to a source of power.

6. An electric heating furnace comprising a hollow body defining a chamber to receive material to be heated, a plurality of vertically spaced strips of conductive material lying generally vertically adjacent the side wall of the chamber, the strips lying at a slight angle to vertical with their adjacent edges overlapping vertically but being spaced horizontally to separate the strips electrically from each other, the strips being formed with vertically extending corrugations and being spaced from the chamber wall to provide therebetween vertical channels for the circulation of hot gases, and terminals connected to the strips and extending through the wall of the furnace for connection to a source of power.

7. An electric heating furnace comprising a hollow rectangular body having a loading opening at one end, vertical strips of thin conductive material extending along and spaced from the inner sides of the body and formed with a series of vertical corrugations, and terminals connected to the strips and extending through the walls of the body for connection to a source of power.

8. An electric heating furnace comprising a hollow rectangular body having a loading opening at one end, vertical strips of thin conductive material extending along and spaced from the inner sides of the body and formed with a series of vertical corrugations, and terminals connected to the strips and extending through the walls of the body for connection to a source of power, the corrugations in the strips being spaced more closely adjacent the loading opening than remote therefrom.

9. An electric heating furnace comprising a hollow rectangular body having a loading opening at one end, vertical strips of thin conductive material extending along and spaced from the inner sides of the body and formed with a series of vertical corrugations, the strips being split horizontally from the ends thereof remote from the loading opening to a point adjacent the loading opening, and separate terminals for the separated portions of the strips extending through the wall of the body at adjacent points remote from the loading opening.

10. An electric heating furnace comprising a hollow body having openings at its ends for passage of material to be heated therethrough, at least three spaced parallel strips of conductive material extending through the body spaced from the walls thereof and defining at least two parallel paths for passage of material from one opening to the other, the strips being formed with parallel corrugations therein transverse to the lengths of the strips, and terminals connected to the ends of the strips and extending through the walls of the body for connection to a source of power.

11. An electric heating furnace comprising a hollow body having openings at its ends for passage of material to be heated therethrough, at least three spaced parallel strips of conductive material extending through the body spaced from the walls thereof and defining at least two parallel paths for passage of material from one opening to the other, and terminals connected to the ends of the strips and extending through the walls of the body for connection to a source of power, the strips being formed with vertical parallel corrugations transverse to the lengths of the strips and having the corrugations spaced more closely adjacent the openings than in the central part of the body.

12. An electric heating furnace comprising a hollow body open at its top and closed at its bottom and defining a central chamber to receive material to be treated, a substantially tubular resistance element formed of a thin strip of conductive material in the cavity around the central chamber and spaced from the walls of the chamber, the resistance element being open at the top and bottom and being substantially coextensive with the central chamber, and terminals connected to the resistance element and extending outward through the wall of the chamber for connection to a source of power, the resistance element being vertically corrugated whereby by varying the corrugations a resistance element of given length can be placed in bodies of different sizes.

13. The construction of claim 12 in which the resistance element is made up of a plurality of conical rings with their adjacent edges overlapping vertically but separated horizontally.

14. An electric heating furnace comprising a hollow body open at its top and closed at its bottom and defining a central chamber to receive material to be treated, a substantially tubular resistance element in the cavity around the central chamber, the resistance element being formed by a plurality of arcuate strips formed with vertical corrugations spaced from the wall of the chamber and defining vertical channels for circulation of gas in the chamber, the strips being assembled in end to end relationship and with terminals at the ends of the strips extending outward through the wall of the body for connection to a source of power.

15. An electric heating furnace comprising a hollow body open at its top and closed at its bottom and defining a central chamber to receive material to be treated, a substantially tubular resistance element in the cavity around the central chamber, the resistance element being made up of a plurality of vertically spaced relatively short rings and each ring being formed by at least three arcuate strips formed with vertical corrugations spaced from the wall of the chamber and defining vertical channels for circulation of gas in the chamber, the strips being assembled in end to end relationship and with terminals

at their ends extending outward through the wall of the body for connection to a source of power.

16. An electric heating furnace comprising a hollow body defining a chamber to receive material to be treated, heating elements in the chamber formed by relatively thin strips of conductive material having spaced ends lying close together within the chamber and spaced from the chamber wall, each of said strips being formed with a series of parallel corrugations therein transverse to the length of the strip and being mounted in the chamber adjacent to and spaced from the wall thereof, terminals having relatively widely spaced parallel portions extending through the chamber wall and angular portions extending angularly toward each other within the chamber and secured to the spaced ends of the strips.

17. An electric heating furnace comprising a hollow body defining a chamber having top and bottom walls and adapted to receive material to be treated, a thin elongated strip of conductive material lying generally parallel to and spaced from one of said walls, said strip being cross corrugated and being bent along its longitudinal center line into a V-section and being mounted with the apex of the V at the top, the strip being formed with a series of spaced openings therethrough adjacent to the apex of the V.

18. An electric heating furnace comprising a hollow body defining a chamber having top and bottom walls and adapted to receive material to be treated, a thin elongated strip of conductive material lying generally parallel to and spaced from one of said walls, said strip being cross corrugated and being bent along its longitudinal center line into a V-section and being mounted with the apex of the V at the top, the strip being formed with a series of spaced elongated slots therethrough adjacent to the apex of the V, and fastenings thereon engaging the strip at the sides of the slots to support the strip.

19. An electric heating furnace comprising a hollow body having walls of refractory material, a heating element in the body formed by a relatively thin wide strip of conductive material, said strip having a relatively large cross sectional area to provide a relatively low electrical resistance, and terminals connected to the ends of the strip and extending through the walls of the furnace body, and an electrical source developing a voltage on the order of ten volts to twenty-five volts and capable of producing high amperage connected to the terminals.

20. The method of heating a furnace having walls of a refractory material, spaced terminals extending through the walls and heating elements in the furnace connected to the terminals and having relatively large cross sectional area and low electrical resistance and which furnace contains a carburizing atmosphere, said method comprising energizing the heating elements through the terminals with electric current at a voltage not greater than about twenty-five volts and at an amperage sufficient to raise the temperature in the furnace to the carburizing temperature of ferrous metal.

References Cited in the file of this patent

UNITED STATES PATENTS

1,432,442	Collins	Oct. 17, 1922
2,035,306	Fannin	Mar. 24, 1936
2,611,790	Koch	Sept. 23, 1952

FOREIGN PATENTS

125,292	Australia	Aug. 26, 1947
643,256	Great Britain	Sept. 15, 1950