US 20080197990A1

(19) United States

(12) Patent Application Publication

(10) Pub. No.: US 2008/0197990 A1

(43) Pub. Date: Aug. 21, 2008

YAMAMOTO et al.

(54) **ONBOARD DISPLAY DEVICE, ONBOARD DISPLAY SYSTEM AND VEHICLE**

(75) Inventors: **Takeshi YAMAMOTO**, Soraku-gun (JP); **Aki MIAKE**, Nara-shi (JP); **Toshiya TAKAHASHI**, Soraku-gun (JP); **Megumi ITOH**, Nara-shi (JP); **Mitsukazu OKUDA**, Ikoma-shi (JP); **Takeshi DOI**, Kashiwara-shi (JP); **Takeo ABE**, Suita-shi (JP)

Correspondence Address:
SHARP KABUSHIKI KAISHA
C/O KEATING & BENNETT, LLP
8180 GREENSBORO DRIVE, SUITE 850
MCLEAN, VA 22102 (US)

(73) Assignee: **SHARP KABUSHIKI KAISHA**, Osaka (JP)

(21) Appl. No.: **12/103,158**

(22) Filed: **Apr. 15, 2008**

Related U.S. Application Data

(63) Continuation of application No. 10/598,098, filed on Aug. 17, 2006, filed as application No. PCT/JP2005/002836 on Feb. 16, 2005.

(30) **Foreign Application Priority Data**

Feb. 20, 2004 (JP) 2004-045471

Publication Classification

(51) **Int. Cl.**
B60Q 1/00 (2006.01)
G09G 5/00 (2006.01)

(52) **U.S. Cl.** **340/438**; 345/1.3

(57) **ABSTRACT**

An onboard display device in accordance with the present invention includes a display section (**11**) attached to an instrument panel of a vehicle. The section (**11**) has a second display area (**11***b*) and a first display area (**11***a*). The second display area (**11***b*) shows at least the speed as vehicle condition images indicating the conditions of the vehicle. The first display area (**11***a*) shows a navigation image and other secondary images. The display section (**11**) measures greater in width than in height with an aspect ratio of 7:3 or greater. The aspect ratio is the width/height ratio of a display area. The onboard display device allows for a visibility-improved simultaneous display of the secondary image, such as a navigation image, and the vehicle condition image, such as a speed display, which presents information on the conditions of the vehicle.

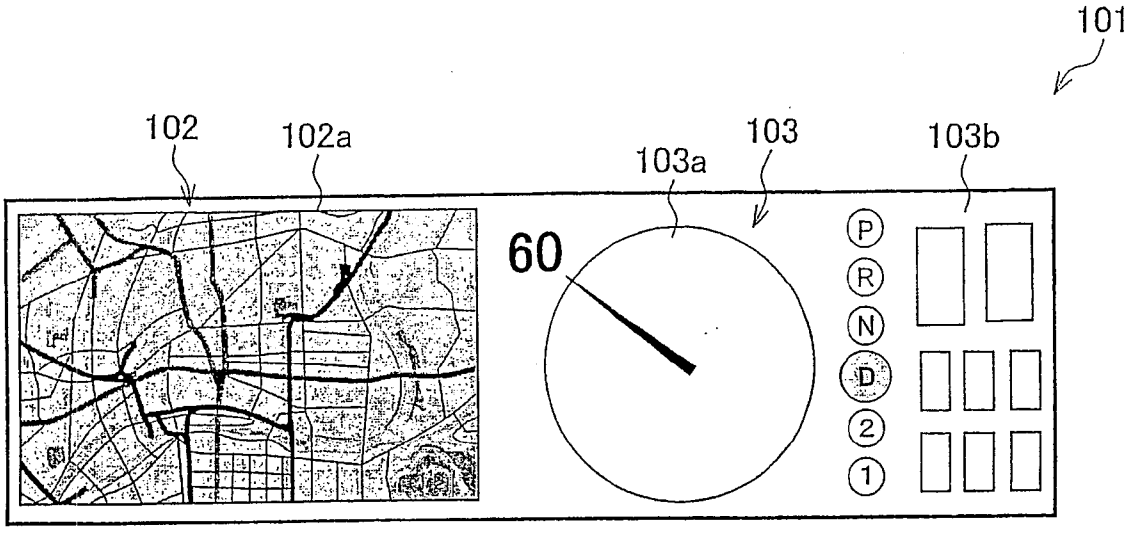

FIG. 1

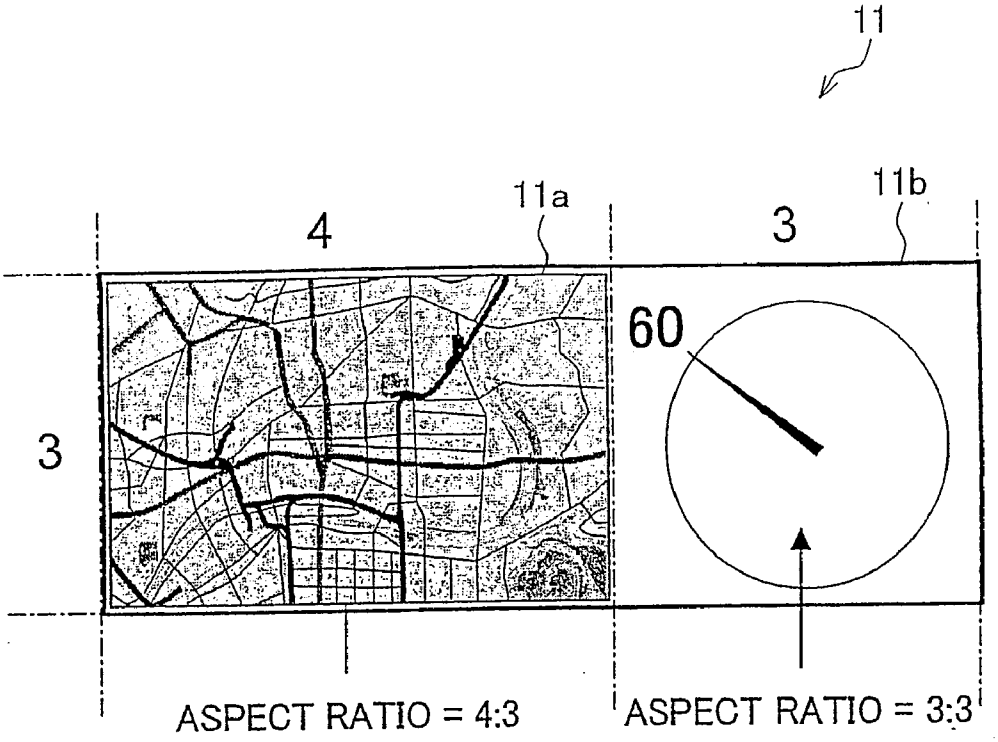

FIG. 2

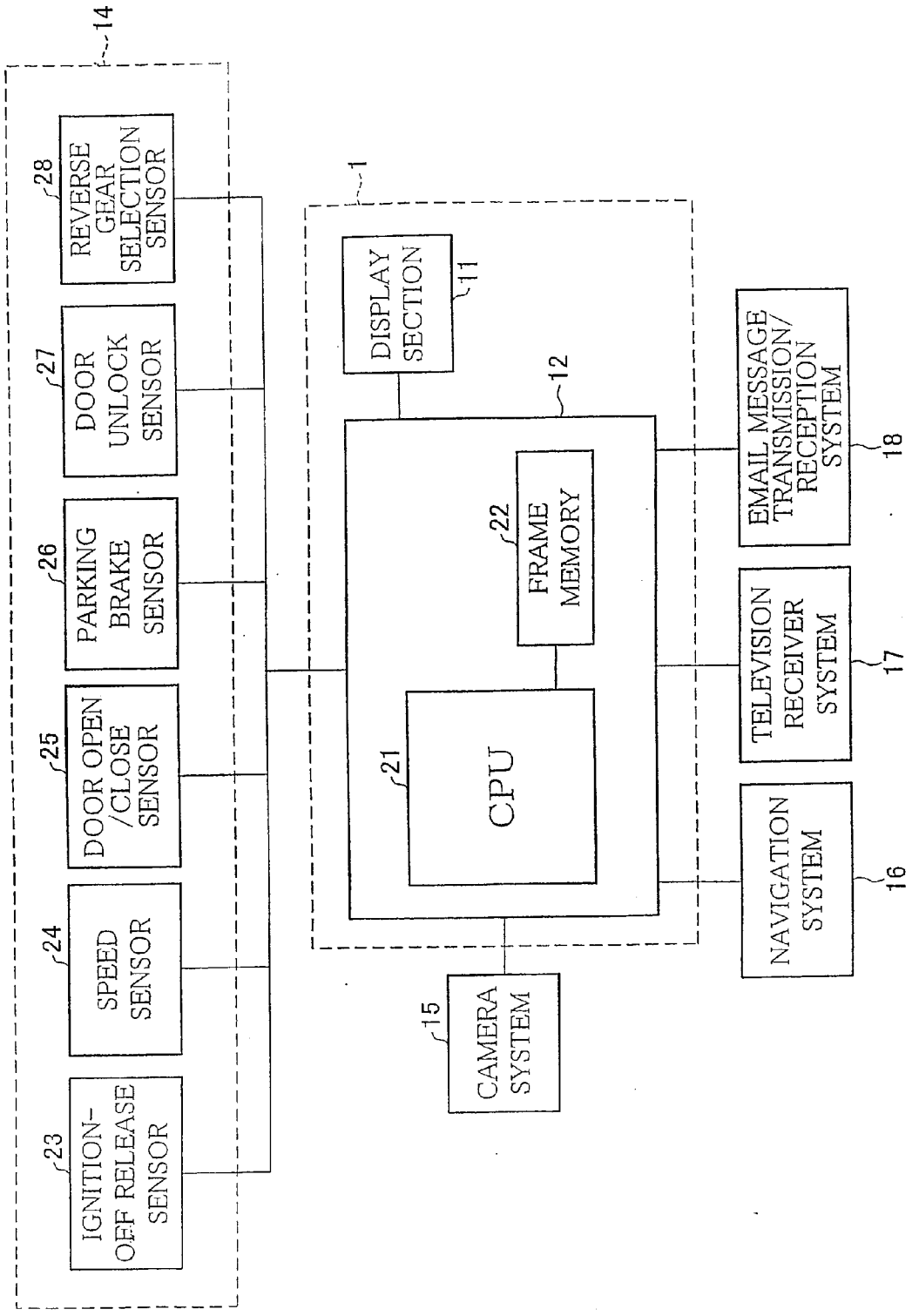
14
28
REVERSE GEAR SELECTION SENSOR
27
DOOR UNLOCK SENSOR
26
PARKING BRAKE SENSOR
25
DOOR OPEN /CLOSE SENSOR
24
SPEED SENSOR
23
IGNITION-OFF RELEASE SENSOR
1
DISPLAY SECTION
11
12
22
FRAME MEMORY
21
CPU
15
CAMERA SYSTEM
EMAIL MESSAGE TRANSMISSION/ RECEPTION SYSTEM
18
TELEVISION RECEIVER SYSTEM
17
NAVIGATION SYSTEM
16

FIG. 3

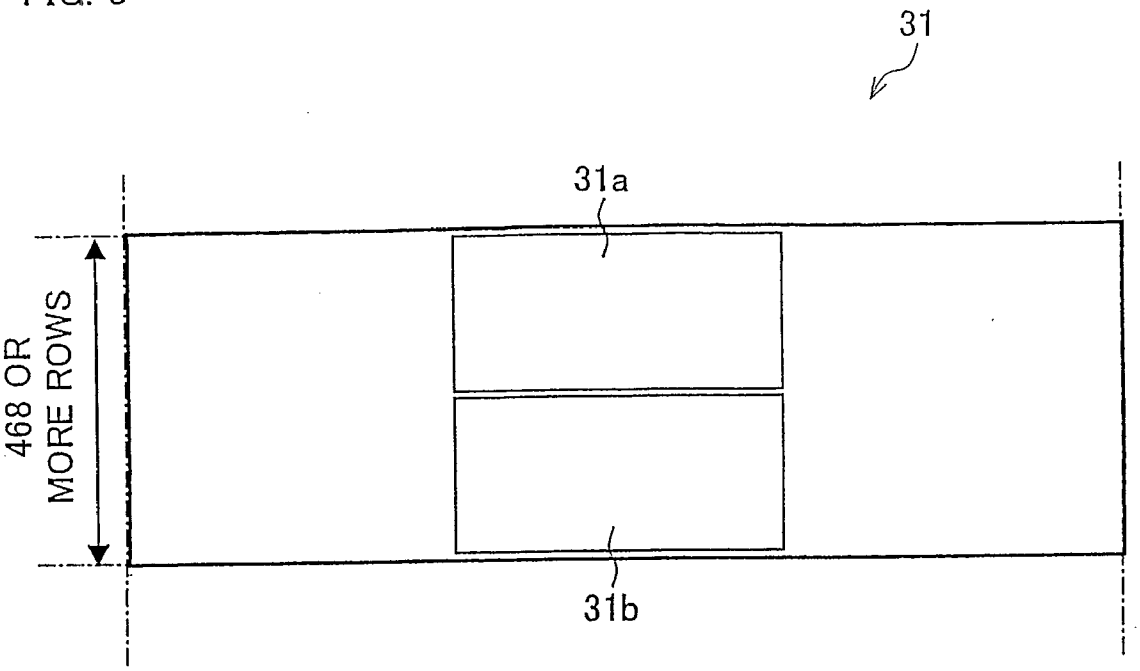

FIG. 4

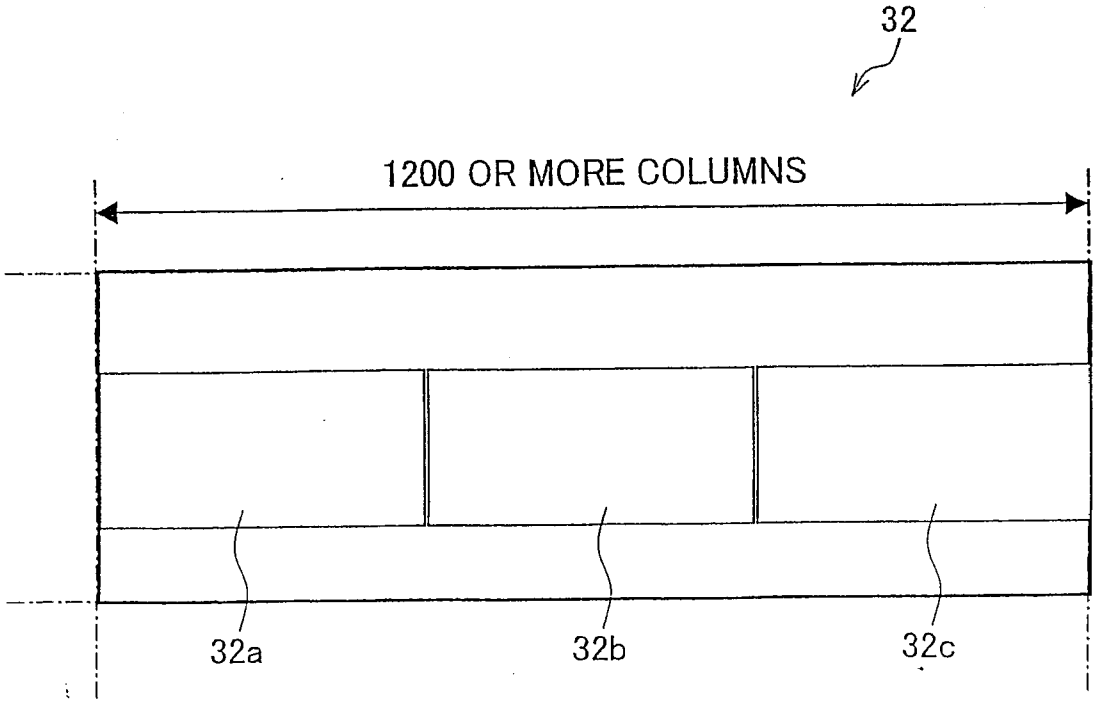

FIG. 5

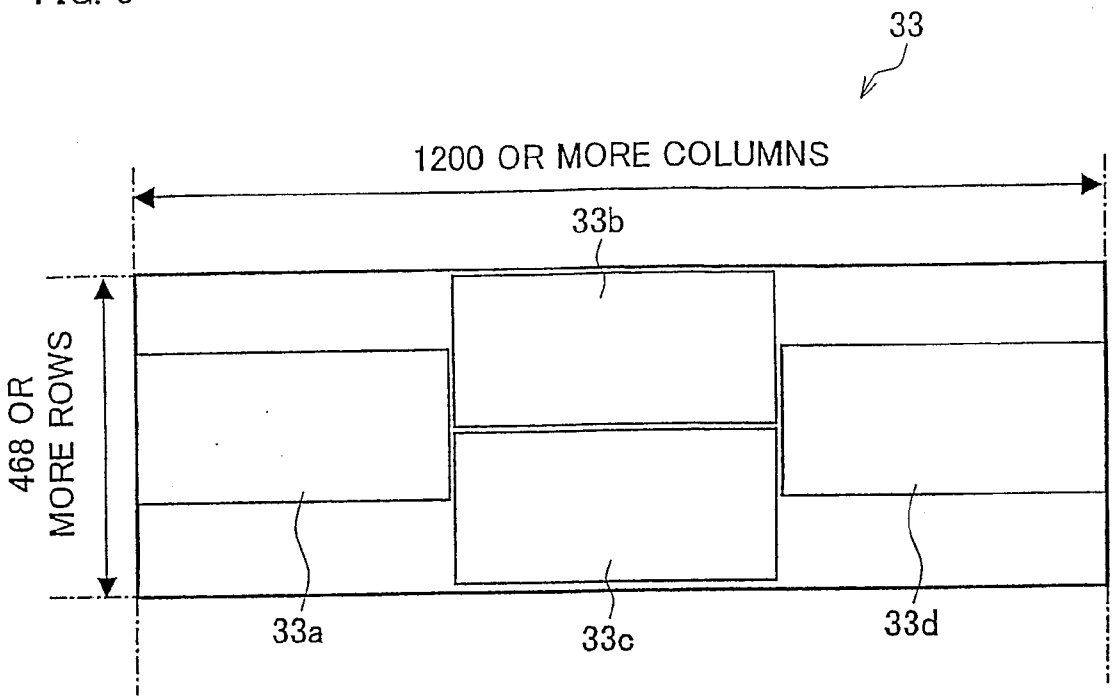
33
1200 OR MORE COLUMNS
33b
468 OR MORE ROWS
33a
33c
33d

FIG. 6

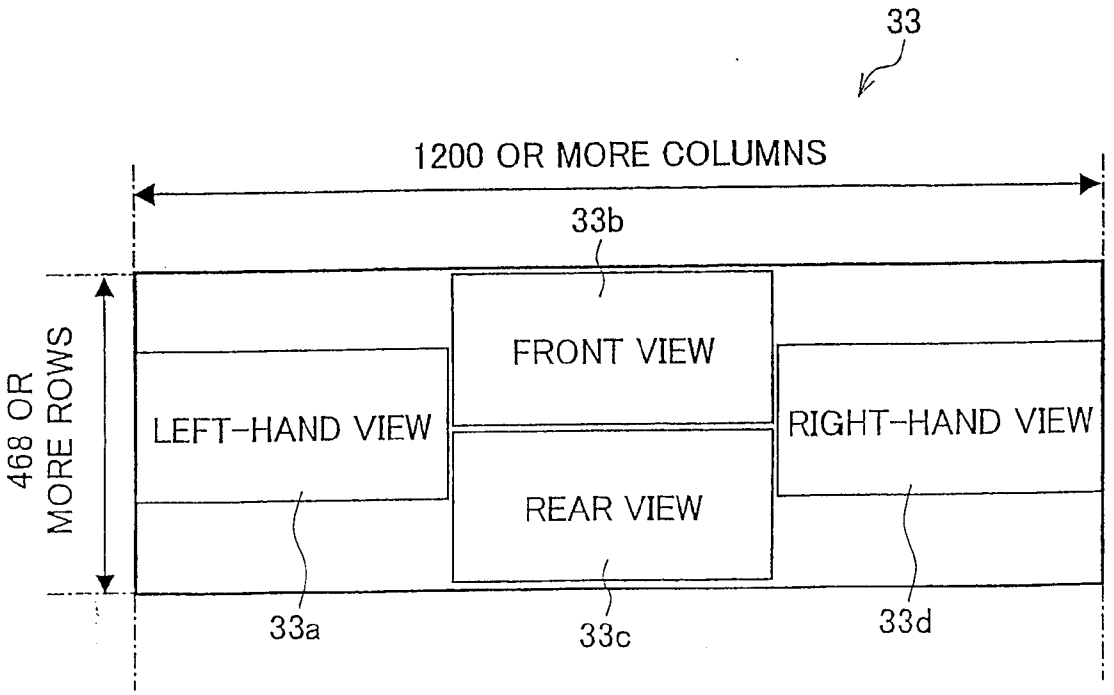
33
1200 OR MORE COLUMNS
33b
468 OR MORE ROWS
FRONT VIEW
LEFT-HAND VIEW
RIGHT-HAND VIEW
REAR VIEW
33a
33c
33d

FIG. 7

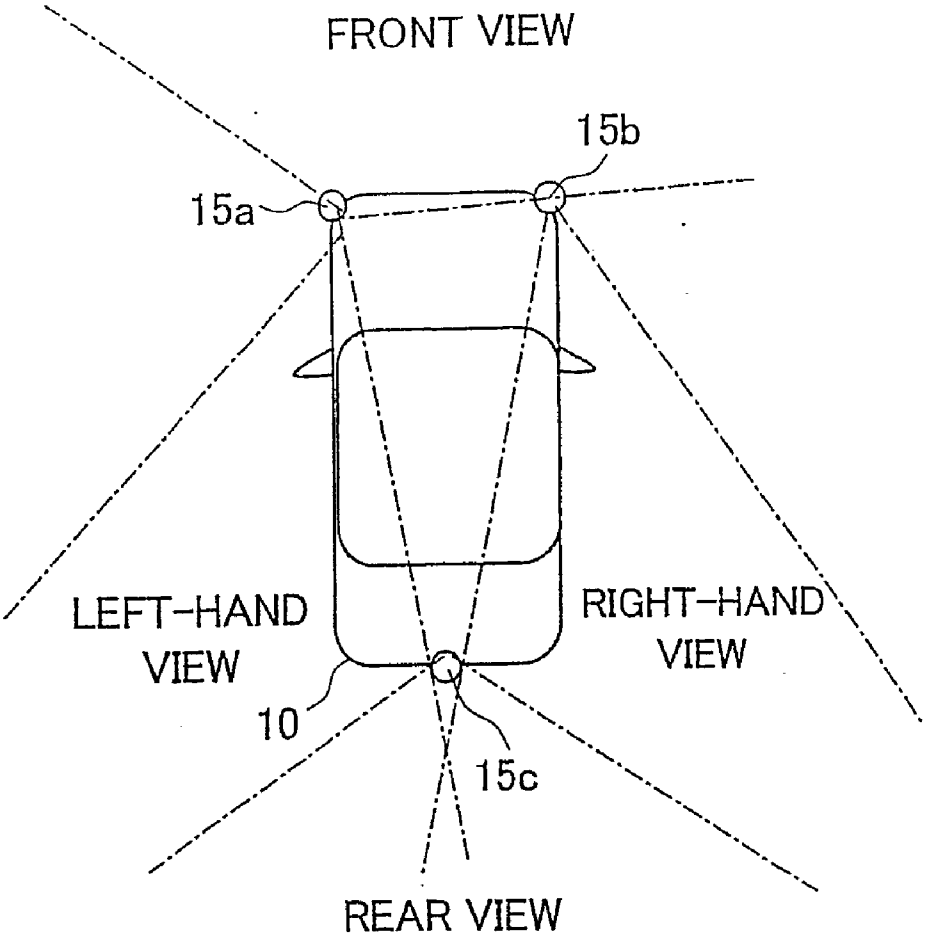
FRONT VIEW
15b
15a
LEFT-HAND VIEW
RIGHT-HAND VIEW
10
15c
REAR VIEW

FIG. 8

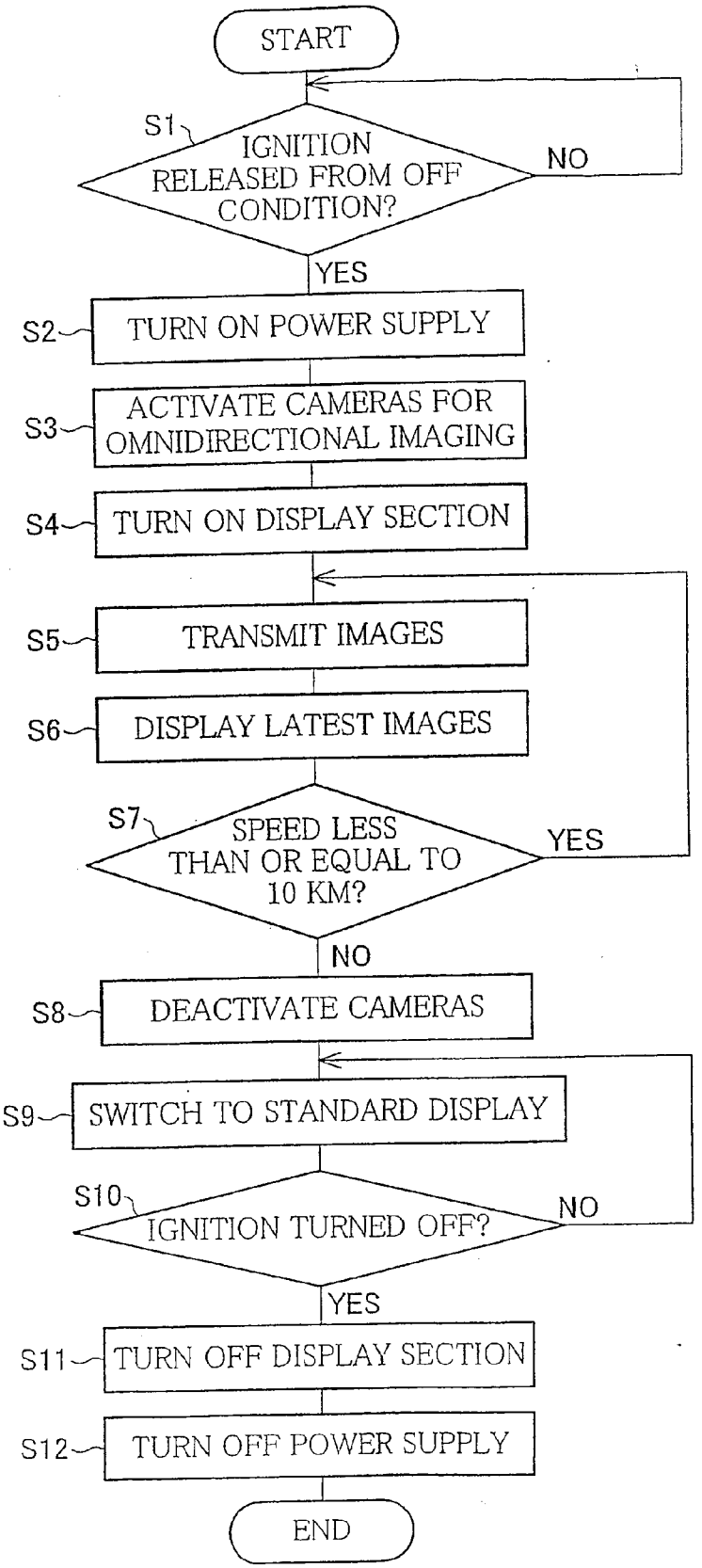
START
S1
IGNITION RELEASED FROM OFF CONDITION?
NO
YES
S2
TURN ON POWER SUPPLY
S3
ACTIVATE CAMERAS FOR OMNIDIRECTIONAL IMAGING
S4
TURN ON DISPLAY SECTION
S5
TRANSMIT IMAGES
S6
DISPLAY LATEST IMAGES
S7
SPEED LESS THAN OR EQUAL TO 10 KM?
YES
NO
S8
DEACTIVATE CAMERAS
S9
SWITCH TO STANDARD DISPLAY
S10
IGNITION TURNED OFF?
NO
YES
S11
TURN OFF DISPLAY SECTION
S12
TURN OFF POWER SUPPLY
END

FIG. 9

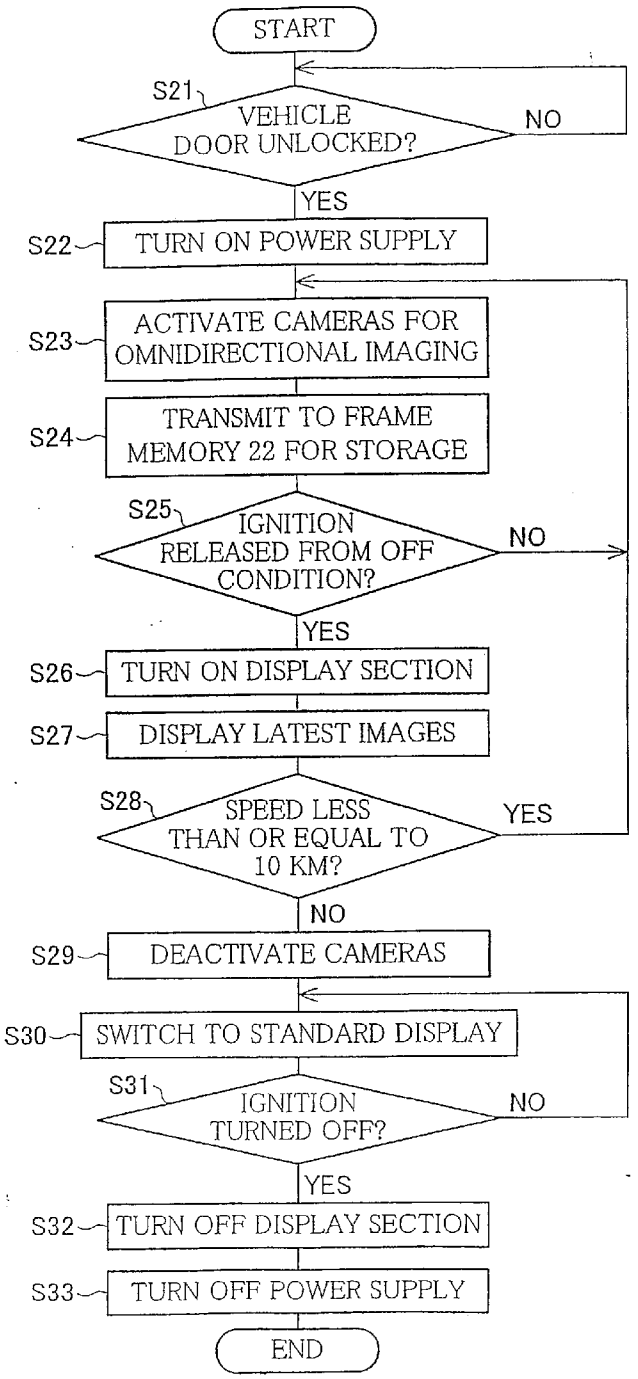
START
S21
VEHICLE DOOR UNLOCKED?
NO
YES
S22
TURN ON POWER SUPPLY
S23
ACTIVATE CAMERAS FOR OMNIDIRECTIONAL IMAGING
S24
TRANSMIT TO FRAME MEMORY 22 FOR STORAGE
S25
IGNITION RELEASED FROM OFF CONDITION?
NO
YES
S26
TURN ON DISPLAY SECTION
S27
DISPLAY LATEST IMAGES
S28
SPEED LESS THAN OR EQUAL TO 10 KM?
YES
NO
S29
DEACTIVATE CAMERAS
S30
SWITCH TO STANDARD DISPLAY
S31
IGNITION TURNED OFF?
NO
YES
S32
TURN OFF DISPLAY SECTION
S33
TURN OFF POWER SUPPLY
END

FIG. 10

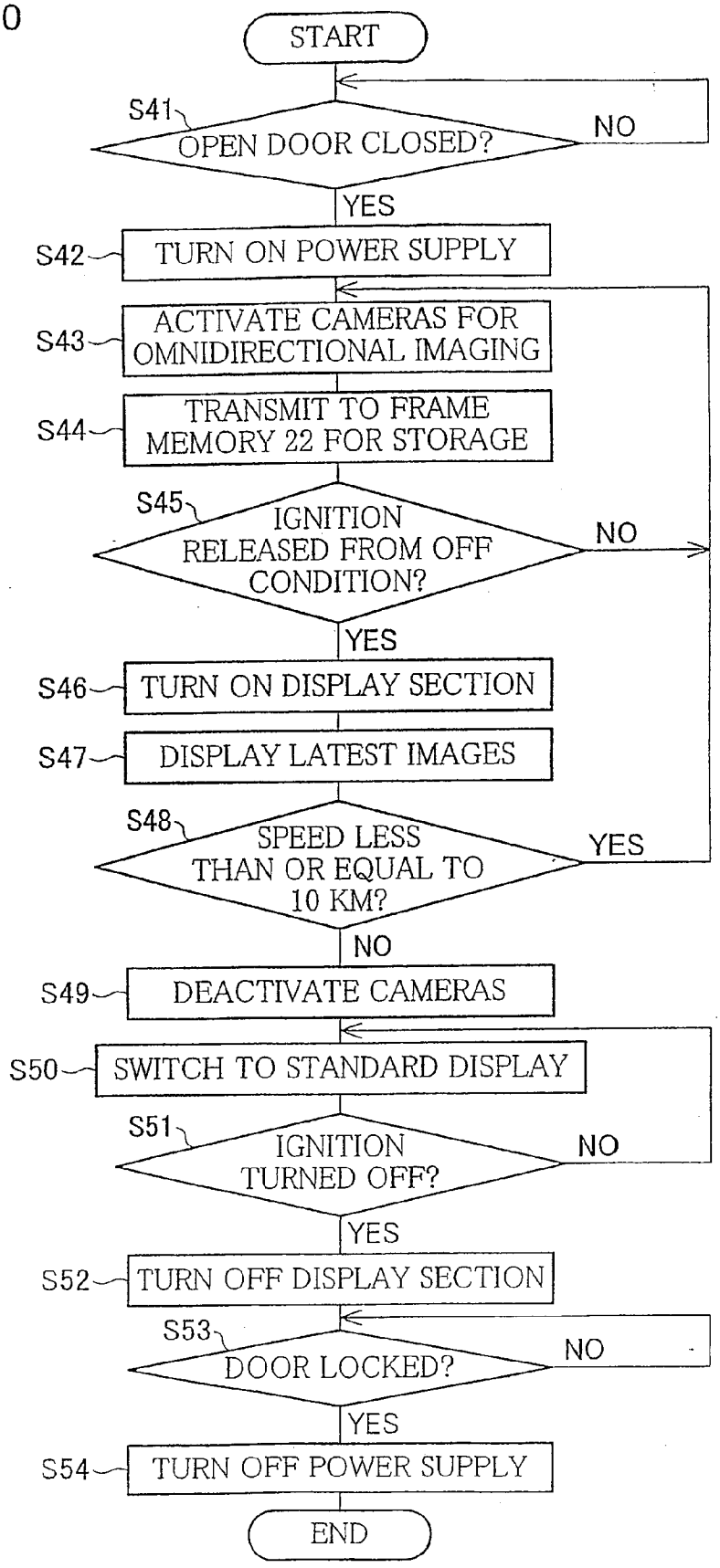
START
S41
OPEN DOOR CLOSED?
NO
YES
S42
TURN ON POWER SUPPLY
S43
ACTIVATE CAMERAS FOR OMNIDIRECTIONAL IMAGING
S44
TRANSMIT TO FRAME MEMORY 22 FOR STORAGE
S45
IGNITION RELEASED FROM OFF CONDITION?
NO
YES
S46
TURN ON DISPLAY SECTION
S47
DISPLAY LATEST IMAGES
S48
SPEED LESS THAN OR EQUAL TO 10 KM?
YES
NO
S49
DEACTIVATE CAMERAS
S50
SWITCH TO STANDARD DISPLAY
S51
IGNITION TURNED OFF?
NO
YES
S52
TURN OFF DISPLAY SECTION
S53
DOOR LOCKED?
NO
YES
S54
TURN OFF POWER SUPPLY
END

FIG. 11

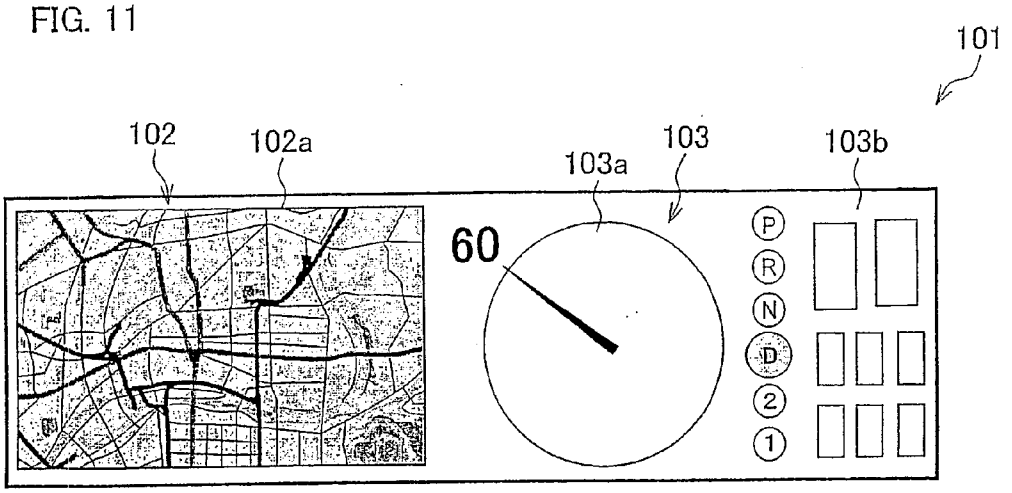

FIG. 12 (a)

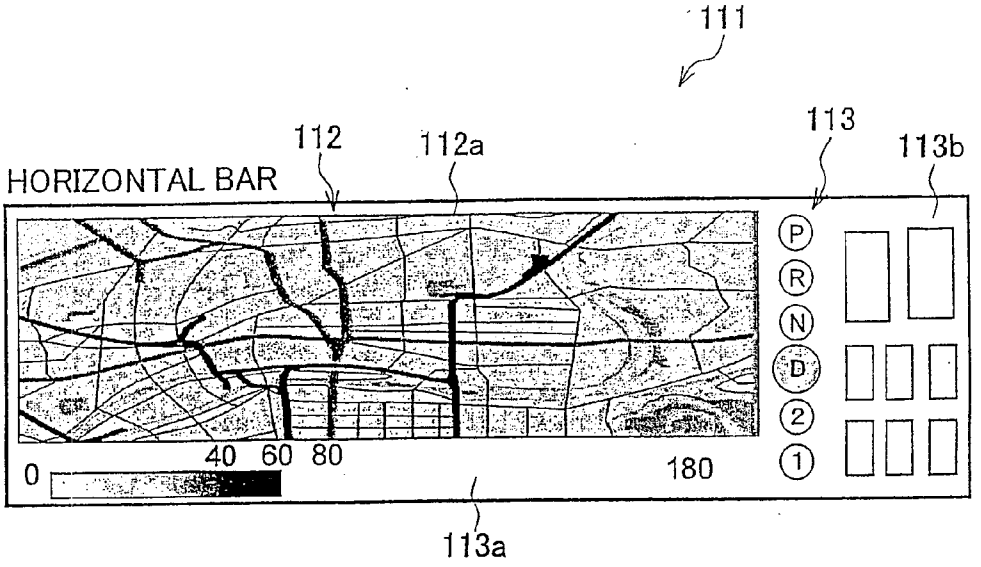

FIG. 12 (b)

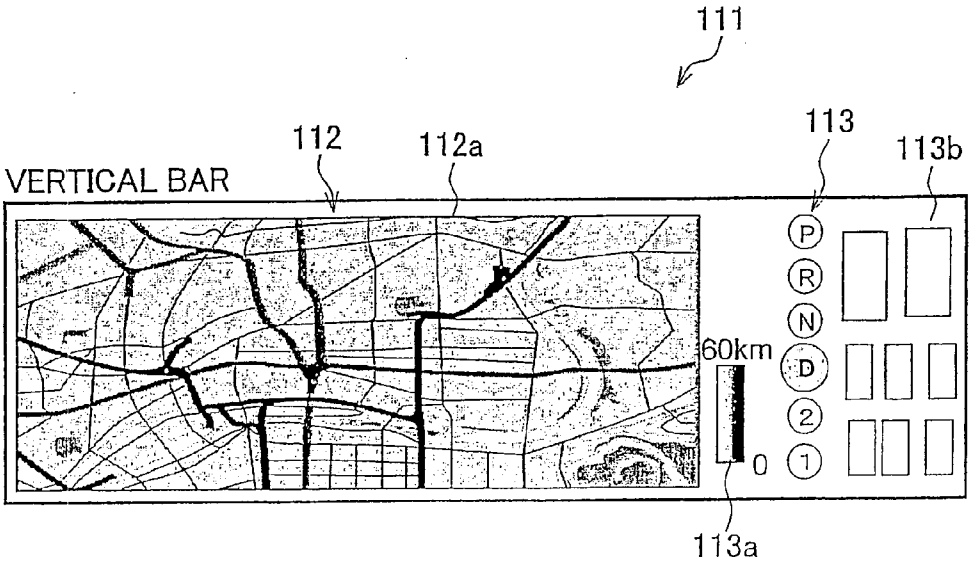

FIG. 13 (a)

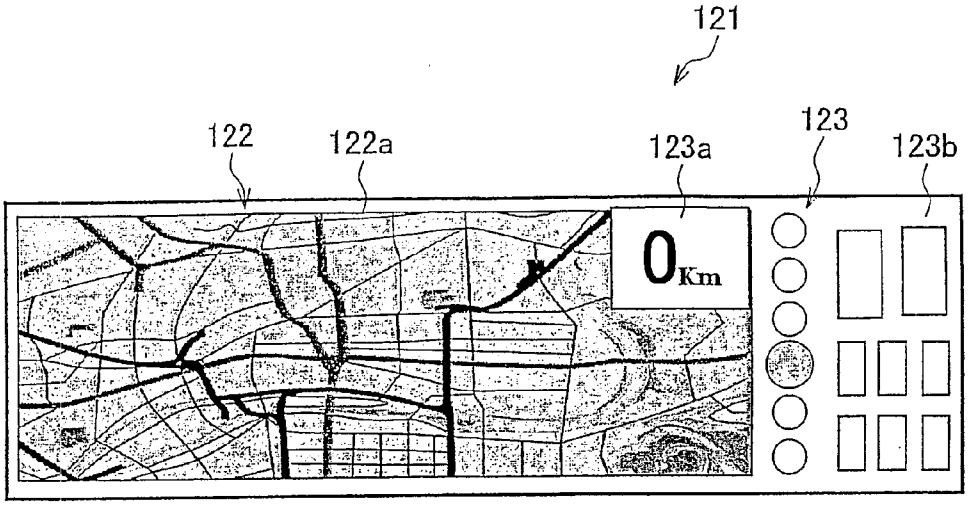

FIG. 13 (b)

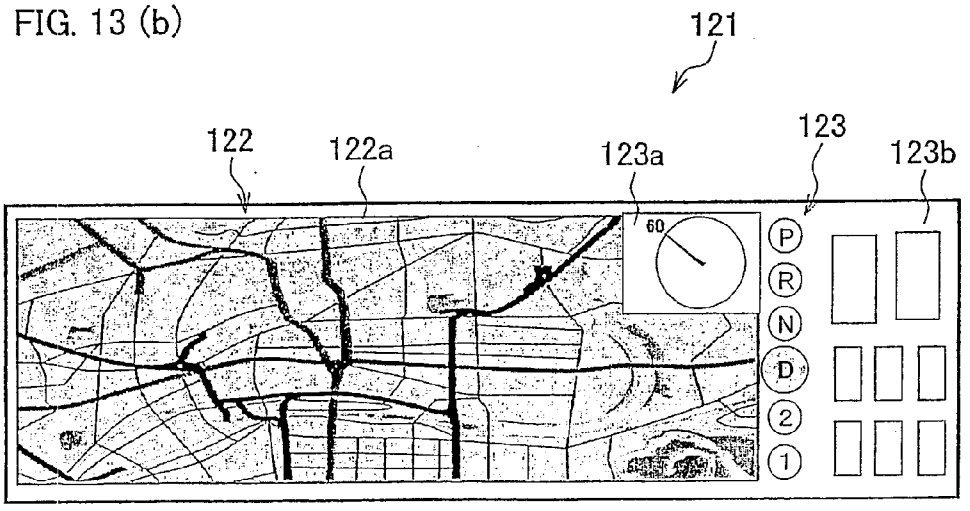

FIG. 14

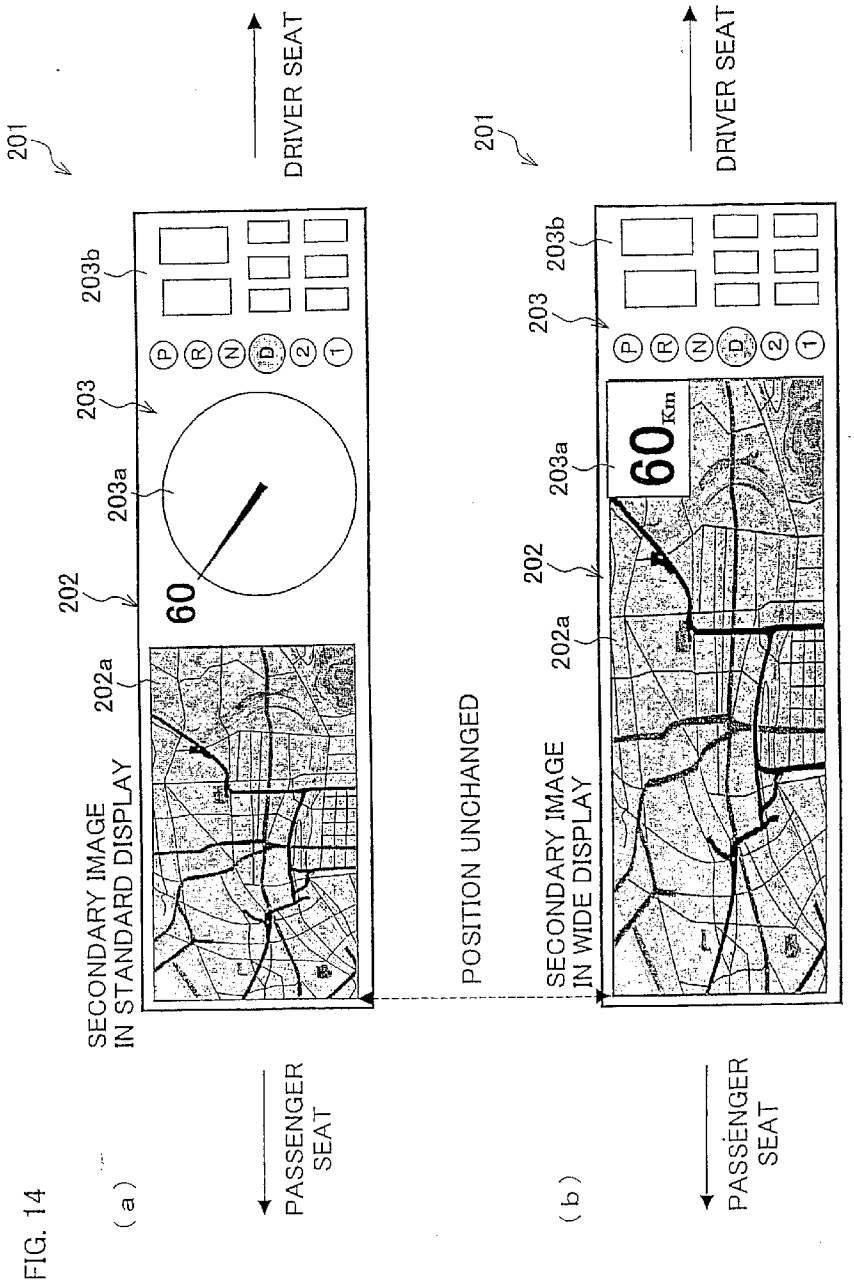
(a)
201
DRIVER SEAT
203b
203
203a
202
202a
60
P R N D 2 1
SECONDARY IMAGE
IN STANDARD DISPLAY
PASSENGER
SEAT
POSITION UNCHANGED
(b)
201
DRIVER SEAT
203b
203
203a
202
202a
60 Km
P R N D 2 1
SECONDARY IMAGE
IN WIDE DISPLAY
PASSENGER
SEAT

ONBOARD DISPLAY DEVICE, ONBOARD DISPLAY SYSTEM AND VEHICLE

TECHNICAL FIELD

[0001] The present invention relates to onboard display devices and systems for displaying the traveling speed, engine speed, and other conditions of the vehicle. The present invention also relates to vehicles in which the onboard display system is installed.

BACKGROUND ART

[0002] New automobile instrument panels, or onboard display devices, have been suggested. They display driver-supporting information, such as navigation images ("secondary images"), as well as the traveling speed, engine speed, and other information on the conditions of the vehicle. See Japanese published patent application 6-195056/1994 (Tokukaihei 6-195056; published on Jul. 15, 1994) and Japanese published patent application 9-123848/1997 (Tokukaihei 9-123848; published on May 13, 1997).

[0003] For example, Tokukaihei 6-195056 provides a wide display screen to improve on visibility, road safety, and ease in operation. Monitor images around the vehicle are displayed on the wide screen along with traveling speed, fuel, and other vehicle-related information.

[0004] Tokukaihei 9-123848 provides a wide display device through which the driver is presented with necessary information depending on traveling conditions, to allow for comfortable and smooth driving.

[0005] Tokukaihei 6-195056 discloses a display device with a screen measuring 160 to 180 mm in width and 80 to 100 mm in height. The patent application also discloses a specific aspect ratio of 16:9 for display screen. The aspect ratio is the width/height ratio of a display area.

[0006] However, navigation images are typically displayed at an aspect ratio of 4:3, 15:9, or 16:9. For example, if a 12:9 navigation image, with the least width, is produced on a Tokukaihei 6-195056 display screen (16:9), the remaining part of the screen has a 4:9 aspect ratio. This means that other images will appear vertically elongated.

[0007] A speed display device mounted on an instrument panel for a vehicle is expected also to produce other displays including navigation and rearview images.

[0008] If a navigation image is produced on the display device disclosed in Tokukaihei 6-195056 at 4:3 (12:9), the remaining 4:9 part of the screen is not large enough to accommodate a round speedometer display.

[0009] The speedometer and related displays are more important than, for example, the navigation system in terms of safety. However, when they are displayed side by side on the Tokukaihei 6-195056 display device, the former appear much smaller and more difficult to recognize. This situation will lead to safety and ease-in-operation issues.

[0010] As to the Tokukaihei 9-123848 display device, sufficient resolution is available if navigation and other secondary images and vehicle condition images presenting the conditions of the vehicle are switchably displayed. If these images are however displayed at the same time, sufficient resolution is not ensured for each kind of image. The resultant display is hard to recognize for the driver. This will again lead to safety and ease-in-operation issues.

DISCLOSURE OF INVENTION

[0011] The present invention, conceived in view of the problems, has an objective to provide an onboard display device and systems, as well as a vehicle incorporating the device and system. The device and system achieves improved visibility to the eye of the driver in the concurrent display of a secondary image and a vehicle condition image. The former includes, for example, a navigation image. The latter presents information on the conditions of the vehicle and includes. for example, a speed display. The device and system thus achieves improved road safety and ease in operation.

[0012] An onboard display device in accordance with the present invention, to achieve the objective, is characterized by the inclusion of a display section attached to an instrument panel of a vehicle. The display section shows at least the speed as vehicle condition images indicating the conditions of the vehicle. The display section also shows a navigation image and other secondary images. The display section measures greater in width than in height with an aspect ratio of 7:3 or greater.

[0013] Generally, at a 4:3 aspect ratio, a navigation image and other secondary images are displayed with sufficient visibility. At a 3:3 aspect ratio, a common, round speedometer can still be displayed with sufficiently visibility.

[0014] Therefore, if a navigation image and other secondary images are shown at the 4:3 aspect ratio, the foregoing arrangement where the display area on the display section measures greater in width than in height with the 7:3 or greater width/height ratio (aspect ratio) can still accommodate a display area having the 3:3 aspect ratio for the vehicle condition images.

[0015] This allows for a visibility-improved simultaneous display of the secondary image, such as a navigation image, and the vehicle condition image, such as a speed display, which presents information on the conditions of the vehicle. As a result, the onboard display device offers improvement in visibility, safety, and easy-of-use to the driver.

[0016] Secondary images, other than the navigation image, include for example a television image, a camera image, an email message transmission/reception image, and other images which are useful information to the driver or a fellow passenger.

[0017] The aspect ratio only needs be 7:3 or greater. For example, at 8:3 or 32:9, two 4:3 or 16:9 display areas can be accommodated. As a result, high visibility displays are produced in both areas, giving extra safety to the driver.

[0018] An onboard display system in accordance with the present invention is characterized by the inclusion of an onboard display device, imaging devices, and a control device. The onboard display device is arranged in accordance with the present invention. The imaging devices take images to and near the front, rear, right, and left of the vehicle. The control device controls imaging operations of the imaging devices

so that a front image, a rear image, a right-hand image, and a left-hand image taken by the imaging devices can be all simultaneously shown on the display section of the onboard display device,

[0019] According to the arrangement, the imaging devices takes images to and near the front, rear, right, and left of the vehicle. The images are simultaneously shown on the display

section of the vehicle display device. The driver can reliably check the surroundings of the vehicle for safety when start moving the vehicle.

[0020] A vehicle in accordance with the present invention is characterized by the inclusion of an onboard display device, imaging devices, a reverse gear, and a display control device. The onboard display device is arranged in accordance with the present invention. The imaging devices take images to and near the rear of the vehicle. The reverse gear is selected to back the vehicle. Under the control of the display control device, the onboard display device, upon a selection of the reverse gear, shows a widthwise elongated image to and near the rear of the vehicle as taken by the imaging devices at an aspect ratio more than or equal to 2.3:1.

[0021] It is not sufficient to display only the space where the vehicle will be parked. The aspect ratio is determined in order that at least about halves of adjacent parking spaces are visible, provided that the body of the vehicle is 170 cm wide (e.g., Japanese compact cars), the parking space is 230 cm wide, and the vehicle is 200 cm high.

[0022] Showing a widthwise elongated image to and near the rear of the vehicle in association with the reverse gear at an aspect ratio of 2.3:1 or greater as in the foregoing arrangement provides an easy-to-see image. Thus, the display device is capable of highly visible displays when parking the vehicle, allowing the driver to safely drive backwards.

[0023] Additional objects, advantages and novel features of the invention will be set forth in part in the description which follows, and in part will become apparent to those skilled in the art upon examination of the following or may be learned by practice of the invention.

BRIEF DESCRIPTION OF DRAWINGS

[0024] FIG. **1**, illustrating an embodiment of the present invention, is a plan view of a display section for an onboard display device.

[0025] FIG. **2** is a schematic block diagram of the onboard display system incorporating the display section.

[0026] FIG. **3** is a drawing showing an example of resolution for the display section.

[0027] FIG. **4** is a drawing showing another example of resolution for the display section.

[0028] FIG. **5** is a drawing showing yet another example of resolution for the display section.

[0029] FIG. **6** is a drawing showing an example of display produced on the display section with the resolution shown in FIG. **5**.

[0030] FIG. **7** is a plan view illustrating the setup of omnidirectional cameras mounted to an automobile to achieve the display example shown in FIG. **6**.

[0031] FIG. **8** is a flow chart illustrating an example of a display process flow for an image captured by the omnidirectional cameras shown in FIG. **7**.

[0032] FIG. **9** is a flow chart illustrating another example of a display process flow for an image captured by the omnidirectional cameras shown in FIG. **7**.

[0033] FIG. **10** is a flow chart illustrating yet another example of a display process flow for an image captured by the omnidirectional cameras shown in FIG. **7**.

[0034] FIG. **11** is a drawing showing an example of the display produced on a display section of an onboard display device in accordance with the present invention.

[0035] FIGS. **12**(*a*), **12**(*b*) are drawings showing designs of the display section when the example of the display produced on the display section in FIG. **11** is modified.

[0036] FIGS. **13**(*a*), **13**(*b*) are drawings showing designs of the display section when the example of the display produced on the display section in FIG. **11** is modified.

[0037] FIGS. **14**(*a*), **14**(*b*) are drawings showing examples of the secondary image display produced on the display section shown in FIG. **11**.

BEST MODE FOR CARRYING OUT THE INVENTION

Embodiment 1

[0038] The following will describe an embodiment of the present invention.

[0039] In the present embodiment, the onboard display device in accordance with the present invention is used as a display device which is part of an instrument panel on an automobile.

[0040] The onboard display system in accordance with the present embodiment contains an onboard display device **1** as shown in FIG. **2**. The onboard display device **1** is mounted to an onboard instrument panel. The device **1** displays at least the speed of the vehicle. The device **1** may also display information on other conditions of the automobile. The device **1** includes a display section **11** and a display control section **12**. The display section **11** includes a liquid crystal display panel for the display of secondary images. The display control section **12** controls the display on the display section **11**. The display section **11** will be described later in detail. The secondary images include, for example, navigation images, television images, camera images, incoming/outgoing email message images, and other images which present information other than the information on the automobile per se (i.e., useful information to the driver and other passengers).

[0041] To display these various images on the display section **11**, the display control section **12** is connected to a sensor system **14**, a camera system **15**, a navigation system **16**, a television receiver system **17**, and an email message transmission/reception system **18**. The sensor system **14** collects information on the conditions of the automobile. The camera system **15** captures images around the automobile. The navigation system **16** produces a navigation image. The television receiver system **17** receives television image. The email message transmission/reception system **18** produces an email message transmission/reception image.

[0042] The display control section **12** includes a CPU **21** as a primary control section. The section **12** also includes a frame memory **22** temporarily record various image data.

[0043] The sensor system **14** includes an ignition-off release sensor **23**, a speed sensor **24**, a door open/close sensor **25**, and a parking brake sensor **26**. The ignition-off release sensor **23** detects the releasing of ignition's off-state of the automobile. The speed sensor **24** detects the traveling speed of the automobile. The door open/close sensor **25** detects an opening/closing of a door of the automobile. The parking brake sensor **26** detects an active parking brake of the automobile. Sensor outputs provide a basis for further processes (to be detailed later).

[0044] The camera system **15** may be mounted at any place on the body of the automobile. The system **15** includes a set of cameras so that they can capture images of the surroundings

around the automobile (a 360° view, including the front, back, and sides). Preferable cameras for the system **15** are, for example, omnidirectional ones disclosed in Japanese published patent application 2003-125396 (Tokukai 2003-125396; published on Apr. 25, 2003). The layout of the omnidirectional cameras for the camera system **15** will be detailed later.

[0045] The navigation system **16**, television receiver system **17**, and email message transmission/reception system **18** are commonly used ones.

[0046] Now, the display section **11** will be described in reference to FIG. **1**.

[0047] The display section **11**, elongated widthwise, has an aspect ratio of 7:3. An aspect ratio is the width/height ratio of a display area (hereinafter, "screen size"). As shown in FIG. **1**, the display section **11** provides two display areas at different screen sizes: a first display area **11***a* at a screen size of 4:3 and a second display area **11***b* at a screen size of 3:3.

[0048] The first display area **11***a* displays a secondary image, for example, an image given by the navigation system ("navigation image"). The second display area **11***b* displays a speedometer or other image presenting the conditions of the vehicle.

[0049] Typical screen sizes for a navigation image is 4:3, 15:9, and 16:9. The first display area **11***a* is set up at a screen size of 4:3 accordingly.

[0050] The speed display on an instrument panel requires a screen size of 3:3 or greater in consideration of road safety. The second display area **11***b* is set up at a screen size of 3:3 accordingly.

[0051] Having the landscape screen size of 7:3, the display section **11** is suited to produce both a navigation image and a speed display.

[0052] Conventional systems could not help but narrow down the speed display area to produce a navigation image or could only display too small a navigation image for the driver to easily obtain navigation information. These problems no longer happen with the 7:3 screen size.

[0053] Whilst the first display area **11***a* with the 4:3 screen size is displaying, for example, a navigation image, the second display area **11***b* with the 3:3 screen size provides a square display area where, for example, a speedometer can be displayed. A common speedometer display has a round shape. The second display area **11***b*, being square, ensures a minimum level of visibility that is required. Driving safety can be improved with the display section **11** thus arranged.

[0054] The screen size of the display section **11** may exceed 7:3, for example, 8:3. When this is the case, the display section **11** can accommodate a first display area **11***a* and a second display area **11***b*, both at a screen size of 4:3. The onboard display device **1** is therefore fabricable by combining those existing liquid crystal display panels with the 4:3 screen size. At 30:9, the onboard display device **1** is similarly fabricable by combining those existing panels with a screen size of 15:9. At 32:9, the onboard display device **1** is fabricable again by combining those existing panels with a screen size of 16:9.

[0055] A liquid crystal display panel with a high resolution produces clear images. The navigation image and the speed display are highly visible, improving safety.

[0056] An example of such a high resolution liquid crystal display panel is shown in FIG. **3**. The display panel **31** contains 468 or more horizontal rows of pixels in a screen size of 7:3. In other words, the display section **31** has 468 or more scan lines parallel to the longer side. The 7:3 screen size gives the number of columns (vertical lines) of pixels at 1092.

[0057] So, the display section **31** can accommodate two display areas in W-QVGA format (400 columns×234 rows) on top of each other. The areas are shown as a first display area **31***a* and a second display area **31***b*.

[0058] The areas **31***a*, **31***b* are capable of high resolution displays. Assigning a navigation image display to the first display area **31***a* and a speed display to the second display area **31***b*, the display section **31** produces an image display which is easily recognizable to the driver, improving safety.

[0059] With these 468 scan lines parallel to the longer side ("rows"), at least two displays, each in W-QVGA format, can fit into the screen on top of each other. Two displays are produced on top of each other at high resolution, allowing the driver make accurate decisions from the images. Therefore, for example, a moving image can be so clearly produced on the screen that the driver can readily recognize it. Road safety will be thus improved.

[0060] Preferably, the section **31** contains 480 rows, which is equal to the number of rows involved in the VGA and WVGA format. Accordingly, a secondary display can be produced in the VGA (Video Graphics Array; 640 columns× 480 rows) or WVGA (Wide Video Graphics Array; 800 columns×480 rows) format, giving significantly high visibility.

[0061] Another example of a resolution-improved liquid crystal display panel is given in FIG. **4**. The display section **32** has a screen size of 7:3. The section **32** contains 1200 or more columns.

[0062] The display section **32** can accommodate three display areas (first, second, and third display areas **32***a*, **32***b*, **32***c*) side by side, each in the W-QVGA (400 columns×234 rows) format.

[0063] The section **32** is capable of a high resolution display in each display area. Thus, assigning, for example, a navigation image to the first display area **32***a*, a speed display to the second display area **32***b*, and a rear view display to the third display area **32***c*, the display section **32** is capable of producing easily recognizable displays to the driver. Road safety will be thus improved.

[0064] Displays shown in the display areas are not limited to these examples. It is preferable if, for example, the displays present useful information to the driver or a fellow passenger.

[0065] To increase the visibility of the onboard display device **1**, a display section **33** may be used which contains 1200 or more columns and 468 or more rows. See FIG. **5**.

[0066] When each display area is in the Q-WVGA format (400 columns×234 rows), the section **33** can accommodate three or more display areas side by side and two or more display areas on top of each other. With each display area being in the W-QVGA format, the section **33** is capable of a high resolution display in each display area. The display section **32** is thus capable of producing easily recognizable displays to the driver. Road safety will be thus improved.

[0067] An example of such a screen is shown in FIG. **5**. The display section **33** has four display areas: a first display area **33***a*, a second display area **33***b*, a third display area **33***c*, and a fourth display area **33***d*. The first display area **33***a* appears on the left of the screen. The second and third display areas **33***b*, **33***c* are in the middle of screen, stacked on top of each other. The fourth display area **33***d* appears on the right of the screen.

[0068] On the display section **33** thus arranged, one may assign, for example, a left-hand view display to the first dis-

play area **33***a*, a front view display to the second display area **33***b*, a rear view display to the third display area **33***c*, and a right-hand view display to the fourth display area **33***d*. See FIG. **6**. With the entire scene around the vehicle being reproduced on the display section **33** in this manner, the driver can intuitively recognize the displays with no mistake. For example, the driver in a parked or otherwise stationary vehicle can reliably check the surroundings for traffic before starting. Road safety will be thus improved.

[0069] As to displays in this case, a left side image and a right side image are displayed on the left side and the right side respectively so that the width direction of the W-QVGA format is the height direction of the display device. Between them, the front is up, the back is down to produce a horizontally elongated display in the W-QVGA format. By producing a display in this manner, the driver can obtain sufficient information at high resolution in all the four directions. When vertically elongated video is to be displayed regarding the side, like when a camera shooting a side view is positioned at the side of the rooftop, such a display, the direction and the display match. Mistakes rarely occur in visual recognition.

[0070] To help recognize traffic ahead of and behind the automobile, preferably, the front view is displayed substantially at the center of the screen, slightly off center in an substantially upward direction. Such a displays is possible by means of superimposition and other image synthesis. The display helps reliable visual recognition by the drive, improving safety.

[0071] To make the display shown in FIG. **6** feasible, the aforementioned omnidirectional cameras for the camera system **15** may be mounted as shown in FIG. **7**, as an example. According to FIG. **7**, there are provided a first omnidirectional camera **15***a* at the front left corner of the automobile **10**, a second omnidirectional camera **15***b* at the front right corner of the automobile **10**, and a third omnidirectional camera **15***c* at the mid-rear of the automobile **10**.

[0072] An image captured by the first omnidirectional camera **15***a* is displayed as a left-hand image in the first display area **33***a* on the display section **33** in FIG. **6**. Part of the captured image is displayed in the second display area **33***b* as a front view display. The image captured by the second omnidirectional camera **15***b* is displayed as a right-hand image in the fourth display area **33***d* on the display section **33** in FIG. **6**. Part of the captured image is displayed in the second display area **33***b* as a front view display. The image captured by the third omnidirectional camera **15***c* is displayed as a rear view display in the third display area **33***c* on the display section in FIG. **6**.

[0073] In this example, the four direction images produced on the display section **33** are fed from three omnidirectional cameras. Four or more omnidirectional cameras may be used instead.

[0074] The camera system **15** may not necessarily involve the aforementioned omnidirectional cameras. Alternatives include, for example, general CCDs and C-MOS image sensors equipped with a standard or wide-angle lens. These alternatives however have smaller shooting angles than the omnidirectional cameras.

[0075] Generally, the four direction images around the automobile **10** on the display section **33** may be useful if displayed before starting the automobile **10**. The following will describe a flow of procedures to display the four direction images on the display section **33**. Reference will be made to a block diagram in FIG. **2** and flow charts shown in FIG. **8** to FIG. **10**.

[0076] First, a flow of procedures for producing a display will be described for a case where the four direction images are displayed on a display screen in response to an ignition turn-on action. Reference will be made to the flow chart in FIG. **8**.

[0077] Relying on a detection signal from the ignition-off release sensor **23** (see FIG. **2**), the display control section **12** determines whether the driver has turned on the ignition, in other words, released the ignition from off condition (step S**1**).

[0078] Upon determining that the driver has released the ignition from off condition, the section **12** turns on the power supply for the camera system **15** (step S**2**) to activate the omnidirectional cameras for omnidirectional imaging (step S**3**).

[0079] Thereafter, the section **12** turns on the display section **11** (step S**4**) and transmits the images captured by the omnidirectional cameras to the display section **11** (step S**5**).

[0080] The display section **11** then displays the received images, which are the latest images (step S**6**).

[0081] Subsequently, the display control section **12** determines, according to a signal from the speed sensor **24**, whether the speed of the automobile exceeds 10 km (step S**7**).

[0082] Upon determining that the speed of the automobile does not exceed 10 km, the section **12** proceeds to step S**5** where the display section **11** continues to display the latest images.

[0083] In contrast, if the section **12** determines in step S**7** that the speed of the automobile exceeds 10 km, the section **12** deactivates the omnidirectional cameras (step S**8**) and switches to a standard display (navigation image, speed display, etc.) (step S**9**).

[0084] In step S**7**, the determination whether to deactivate the omnidirectional cameras is made based on the speed of the automobile. This is not the only possibility. For example, a parking brake sensor **26** may be used to make a decision based on whether the parking brake is released. Further, there may be provided a push button inside the vehicle which, when pressed, turns off the omnidirectional cameras.

[0085] Next, according to a detection signal from the ignition-off release sensor **23**, the display control section **12** determines whether the ignition is turned off (step S**10**). This determination is made while the display section **11** is producing a standard display under the control of the section **12**.

[0086] Upon determining that the ignition is turned off, the section **12** turns off the display section **11** (step S**11**) and also turns off the power supply for the camera system **15** (step S**12**). The display section **11** continues to produce a standard display until the ignition is determined to be turned off.

[0087] Now, a flow of procedures for producing a display will be described for a case where the four direction images are displayed on a display screen in response to a door unlock action. Reference will be made to the flow chart in FIG. **9**.

[0088] First, the display control section **12** determines, according to a signal from a door unlock sensor **27**, whether a vehicle door is unlocked (step S**21**). Upon determining that a door is unlocked, the section **12** turns on the power supply for the camera system **15** (step S**22**) to activate the omnidirectional cameras for omnidirectional imaging around the vehicle (step S**23**).

[0089] Images captured in step S**23** are transmitted to the frame memory **22** in the display control section **12** for storage (step S**24**).

[0090] Subsequently, the display control section **12** determines, according to a signal from the ignition-off release sensor **23**, whether the driver has released the ignition from off condition (step S**25**).

[0091] Upon determining that the driver has not released the ignition from off condition, the section **12** proceeds to step S**23**. The section **12** transmits the images captured by the omnidirectional cameras to the frame memory **22** for storage until the ignition is released from off condition.

[0092] In contrast, upon determining in step S**25** that the driver has released the ignition from off condition, the section **12** turns on the display section **11**. The display section **11** displays the images stored in the frame memory **22**, in other words, the latest images captured, under the control of section **12** (step S**27**).

[0093] Subsequently, the display control section **12** determines, according to a signal from the speed sensor **24**, whether the speed of the automobile exceeds 10 km (step S**28**).

[0094] Upon determining that the speed of the automobile does not exceed 10 km, the section **12** proceeds to step S**23** where the display section **11** continues to display the latest images.

[0095] In contrast, if the section **12** determines in step S**28** that the speed of the automobile exceeds 10 km, the section **12** deactivates the omnidirectional cameras (step S**29**), and switches to a standard display (navigation image, speed display, etc.) (step S**30**).

[0096] In step S**28**, the determination whether to deactivate the omnidirectional cameras is made based on the speed of the automobile. This is not the only possibility. For example, a parking brake sensor **26** may be used to make a decision based on whether the parking brake is released. Further, there may be provided a push button inside the vehicle which, when pressed, turns off the omnidirectional cameras.

[0097] Next, according to a detection signal from the ignition-off release sensor **23**, the display control section **12** determines whether the ignition is turned off (step S**31**). This determination is made while the display section **11** is producing a standard display under the control of the section **12**.

[0098] Upon determining that the ignition is turned off, the section **12** turns off the display section **11** (step S**32**) and also turns off the power supply for the camera system **15** (step S**33**). The display section **11** continues to produce a standard display until the ignition is determined to be turned off.

[0099] Now, a flow of procedures for producing a display will be described for a case where the four direction images are displayed on a display screen in response to a door open/close action. Reference will be made to the flow chart in FIG. **10**.

[0100] First, according to a signal from the door open/close sensor **25**, the display control section **12** determines whether a vehicle door, which was open, is now closed (step S**41**). Upon determining that an open door is now closed, the section **12** turns on the power supply for the camera system **15** (step S**42**) to activate the omnidirectional cameras for omnidirectional imaging around the vehicle (step S**43**).

[0101] Images captured in step S**43** are transmitted to the frame memory **22** in the display control section **12** for storage (step S**44**).

[0102] Subsequently, the display control section **12** determines, according to a signal from the ignition-off release sensor **23**, whether the driver has released the ignition from off condition (step S**45**).

[0103] Upon determining that the driver has not released the ignition from off condition, the section **12** proceeds to step S**43**. The section **12** transmits the images captured by the omnidirectional cameras to the frame memory **22** for storage until the ignition is released from off condition.

[0104] In contrast, upon determining in step S**45** that the driver has released the ignition from off condition, the section **12** turns on the display section **11**. The display section **11** displays the images stored in the frame memory **22**, in other words, the latest images captured, under the control of the section **12** (step S**47**).

[0105] Subsequently, the display control section **12** determines, according to a signal from the speed sensor **24**, whether the speed of the automobile exceeds 10 km (step S**48**).

[0106] Upon determining that the speed of the automobile does not exceed 10 km, the section **12** proceeds to step S**43** where the display section **11** continues to display the latest images.

[0107] In contrast, if the section **12** determines in step S**48** that the speed of the automobile exceeds 10 km, the section **12** deactivates the omnidirectional cameras (step S**49**), and switches to a standard display (navigation image, speed display, etc.) (step S**50**).

[0108] In step S**48**, the determination whether to deactivate the omnidirectional cameras is made based on the speed of the automobile. This is not the only possibility. For example, a parking brake sensor **26** may be used to make a decision based on whether the parking brake is released. Further, there may be provided a push button inside the vehicle which, when pressed, turns off the omnidirectional cameras.

[0109] Next, according to a detection signal from the ignition-off release sensor **23**, the display control section **12** determines whether the ignition is turned off (step S**51**). This determination is made while the display section **11** is producing a standard display under the control of the section **12**. Upon determining that the ignition is turned off, the section **12** turns off the display section **11** (step S**52**). The display section **11** continues to produce a standard display until the ignition is determined to be turned off.

[0110] The display control section **12** then determines, according to a signal from a sensor (not shown) detecting locked doors, whether the doors are locked (step S**53**). Upon determining that the doors are locked, the section **12** turns off the power supply for the camera system **15** (step S**53**).

[0111] Generally, omnidirectional checks are preferably done before starting the automobile **10**. The driver can very safely start moving the automobile **10** with the help of the four direction image display on the display screen which occurs in response to an ignition turn-on action, the unlocking of a door, or the opening/closing of the door(s).

Embodiment 2

[0112] The following will describe another embodiment of the present invention. In the present embodiment, the onboard display device in accordance with the present invention is used as an onboard instrument panel as in embodiment 1.

[0113] The onboard display device in accordance with the present embodiment contains a display section **101** as shown in FIG. **11**. The section **101** is capable of wide displays

similarly to the display section **11** of embodiment 1 shown in FIG. **1**. Unlike the display section **11** shown in FIG. **1**, the display section **101** displays both secondary images and vehicle condition images at an identical aspect ratio of 4:3. The secondary images, not related to the speed and other conditions of the vehicle, are produced in a first display area **102**. The vehicle condition images show the speed and other conditions of the vehicle and are produced in a second display area **103**. The display section **101** has an aspect ratio of 8:3 accordingly.

[0114] The first display area **102** displays a navigation image **102***a*. The second display area **103** displays a speed display image **103***a*, as well as vehicle condition images **103***b* presenting informing of the gear position, fuel gauge, etc. The speed display image **103***a* shows a round speedometer. Reshaping the speedometer as a bar or representing it in numerals allows for a greater display area for the navigation image **102***a*.

[0115] Bar speedometers are shown as examples on a display section **111** in FIGS. **12**(*a*), **12**(*b*). A numerical representation of the speedometer is shown as an example on a display section **121** in FIG. **13**(*a*). Both the display sections **111**, **121** have the same 8:3 aspect ratio as the display section **101** in FIG. **11**.

[0116] The display section **111** in FIGS. **12**(*a*), **12**(*b*) shows a navigation image **112***a* in a first display area **112**. The image **112***a* is extended widthwise reaching the area for the speed display image **103***a* shown in FIG. **11**. In FIGS. **12**(*a*), **12**(*b*), vehicle condition images **113***b*, among the display images in the second display area **113**, appear on the far right of the display section **111**. The images **113***b* appear at almost the same position as the vehicle condition images **103***b* in the second display area **103** on the display section **101** in FIG. **11**.

[0117] Referring to FIG. **12**(*a*), the speed display image **113***a* in the second display area **113** appear below the navigation image **112***a* in the first display area **112**. The image **113***a* shows a horizontal speed indicator bar. In FIG. **12**(*b*), the speed display image **113***a* in the second display area appear between the navigation image **112***a* in the first display area **112** and the vehicle condition images **113***b*. The **113***a* shows vertical speed indicator bar.

[0118] The display section **121** in FIGS. **13**(*a*), **13**(*b*) shows a navigation image **122***a* in the first display area **122**. As with the image **112***a* in the display section **111**, the image **122***a* is extended widthwise reaching the area for the speed display image **103***a* shown in FIG. **11**. In FIGS. **13**(*a*), **13**(*b*), vehicle condition images **123***b*, among the display images in the second display area **123**, appear on the far right of the display section **121**. The images **123***b* appear at almost the same position as the vehicle condition images **103***b* in the second display area **103** on the display section **101** shown in FIG. **11**.

[0119] Referring to FIG. **13**(*a*), the speed display image **123***a* in the second display area **123** represents a numerical speedometer and appears in the top right corner of the navigation image **122***a* in the first display area **122**.

[0120] FIG. **13**(*b*) shows another speed display image **123***a* in the second display area **123**. The image **123***a* appears in the top right corner of the navigation image **122***a* in the first display area **122** as with the one in FIG. **13**(*a*). The speed display image **123***a* represents a round speedometer as in FIG. **11**. Round speedometers have a problem of extremely poor visibility.

[0121] Therefore, when a wide navigation image is shown in the display section, the speedometer is most telling in terms of visibility if it is shaped as a bar rather than a circle or represented by numerals.

[0122] To produce a large display of a secondary image (for example, when the driver backs to park the vehicle, a large rear view display is easy to see), the speedometer, tachometer, and other displays are inevitably produced at reduced size. A large display is sure to be produced if the image is superimposed; the overlapping of the images however decreases the visibility of the rear view display. Accordingly, the speedometer, tachometer, etc. may be given in numerals or shown in a linear shape.

[0123] These designs ease degradation in visibility even with limited available space. Road safety is further improved.

[0124] As mentioned earlier, the display area for a navigation image and other secondary images is preferably rendered variable when the driver needs the images to be shown in the display area for the secondary images.

[0125] In this case, if a navigation image is displayed at an increased scale in such a manner that a reference point is not stationary, but movable, display edges move and will highly likely distract the attention of the driver.

[0126] When the display area for secondary images is scaled up through no proper process without defining any reference point, display area edges may move and seriously distract the attention of the driver. Therefore, movements of the edge parts need be rendered not that eye-catching.

[0127] This is achieved by extending the image toward the driver seat with a reference point being defined at an edge part of the image closer to the front passenger seat. Referring to FIGS. **14**(*a*), **14**(*b*), the following will describe this method by way of an example.

[0128] A display section **201** shown in FIG. **14**(*a*) shares an identical design with the display section **101** shown in FIG. **11**. A display section **201** shown in FIG. **14**(*b*) shares an identical design with the display section **121** shown in FIG. **13**(*a*).

[0129] Here, in an alteration of the display section **201** from the design in FIG. **14**(*a*) to the one in FIG. **14**(*b*), a navigation image **202***a* in the first display area **202** is extended toward the driver seat. A reference is given by a bus line (vertical display line) on the front passenger seat side of the navigation image **202***a* in the first display area **202**.

[0130] As a result of the alteration, a speed display image **203***a* in the second display area **203** shown in FIG. **14**(*a*) appears in FIG. **14**(*b*) as a numerical speedometer in the top right corner of the now widened navigation image **202***a*. The layout of the vehicle condition images **203***b* of the second display area **203** has not changed in the scaling up of the navigation image **202***a*.

[0131] As described in the foregoing, the visibility of the vehicle condition images in the display section **201** which has the same aspect ratio in FIG. **14**(*a*) and FIG. **14**(*b*) is prevented from decreasing in the scaling-up process of a secondary image, by altering the manner in which the vehicle condition images are displayed.

[0132] If a secondary image is displayed at an increased scale in such a manner that a reference point is not stationary, display edges move and will highly likely distract the attention of the driver.

[0133] Accordingly, the display control section scales up the secondary image with any one of the vertical bus line (vertical display line) of the image **202** on the driver's side or

the vertical bus line (vertical display line) of the image **202** on the front passenger's side being fixed. The vertical bus line (vertical display line) on the unfixed side is altered.

[0134] Accordingly, either one of the bus lines (vertical display lines) of a secondary image is fixed. The secondary image is scaled up by allowing the other bus line (vertical display line) to change. One of the display edges is fixed. This approach eliminates undesirable image fluctuations and allows the driver to comfortably check the images while driving. The approach is provides better safety to the driver.

[0135] With the screen size being varied based on a fixed reference point, the display device becomes free from undesirable image fluctuations and allows the driver to comfortably check images.

[0136] Using the onboard display system in accordance with the present embodiment, the onboard display device **1** is capable of very wide image displays.

[0137] For example, when the driver backs the vehicle, the system presents a rear view fully across the wide screen. Thus, the display device is capable of highly visible displays when parking the vehicle, allowing the driver to safely drive backwards.

[0138] Specifically, upon a determination that the driver has selected the reverse gear, the display section **11** produces, under the control of the display control section **12**, a rear view display at an aspect ratio of 2.3:1 or greater on the display screen of the display section **11**. The determination is made by the display control section **12** based on a signal from a reverse gear selection sensor **28** shown in FIG. **2**. The 2.3:1 or wider display when backing the vehicle provides very easy-to-see images.

[0139] For example, if the body of the vehicle is about 170 cm wide (e.g., Japanese compact cars), the parking space needs be about 230 cm wide which includes a 60 cm space for door opening/closing.

[0140] In a parking process, it is not sufficient to display only the space where the vehicle will be parked. it is desirable if at least about halves of adjacent parking spaces are visible.

[0141] A typical passenger vehicle is up to 2 m high.

[0142] Therefore, a display at an aspect ratio of 230×2/200=2.3 (:**1**) or greater is considered to be sufficient.

[0143] The resultant display device is capable of highly visible, wide displays at the 2.3:1 or greater aspect ratio when parking the vehicle, allowing the driver to safely drive backwards.

[0144] The embodiments are based on a assumption that the display panel for use in the display section is a liquid crystal panel. This is not meant to be limiting at all. The display panel may be a plasma display device, an organic or inorganic EL panel, CRT, or other like display device.

[0145] In the vehicle display device in accordance with the present invention, the control device activates the imaging device in response to an ignition-induced start-up of the engine in the vehicle or automobile. Under the control of the control device, the display section simultaneously displays images of the front, rear, right, and left of the vehicle.

[0146] The activation in response to the engine start-up, along with the simultaneous display of the front, rear, right, and left images on the display section, allows the drivers to reliably check for safety all around the vehicle before moving.

[0147] In addition, as to displays in this case, a left side image and a right side image are displayed on the left side and the right side respectively so that the width direction of the W-QVGA format is the extended width directions of the display areas on the display section. Preferably, between them, the front is up, the back is down to produce a horizontally elongated display in the W-QVGA format. By producing a display in this manner, the driver can obtain sufficiently information at high resolution in all the four directions. The direction and the display match. Mistakes rarely occurs in visual recognition.

[0148] The members in the onboard display device **1** and processing steps in accordance with the embodiments can be realized by a CPU or other computing means executing a computer program contained in a ROM (Read Only Memory), RAM, or other storage means to control a keyboard or like input means, a display device or like output means, or an interface circuit or like communications means. Therefore, the various functions and processes of the onboard display device of the present embodiment can be realized if a computer equipped with these means simply reads a storage medium containing the program and executing the program. In addition, if the program is contained in a removable storage medium, the various functions and processes can be realized on any given computer.

[0149] Such a computer program storage medium may be a memory (not shown), such as a ROM, so that the process is executable on a microcomputer. Alternatively, a program medium may be used which can be read by inserting the storage medium in an external storage device (program reader device; not shown).

[0150] In addition, in either of the cases, it is preferable if the contained program is accessible to a microprocessor which will execute the program. Further, it is preferable if the program is read and then downloaded to a program storage area of a microcomputer where the program is executed. Assume that the program for download is stored in a main body device in advance.

[0151] In addition, the program medium is a storage medium arranged so that it can be separated from the main body. Examples of such a program medium include a tape, such as a magnetism tape and a cassette tape; a magnetism disk, such as a flexible disk and a hard disk; a disc, such as a CD/MO/MD/DVD; a card, such as an IC card (inclusive of a memory card); and a semiconductor memory, such as a mask ROM, an EPROM (erasable programmable read only memory), an EEPROM (electrically erasable programmable read only memory), or a flash ROM. All these storage media holds a program in a fixed manner.

[0152] In addition, if the system is configured to be connectible to a communications network, such as the Internet, it is preferred that the storage medium contains the program in a flowing manner like downloading the program over the communications network.

[0153] Further, to download the program over the communications network, it is preferred if the program for download is stored in a main body device in advance or installed from another storage medium.

[0154] The embodiments and examples described in Best Mode for Carrying Out the Invention are for illustrative purposes only and by no means limit the scope of the present invention. Variations are not to be regarded as a departure from the spirit and scope of the invention, and all such modifications as would be obvious to one skilled in the art are intended to be included within the scope of the claims below.

INDUSTRIAL APPLICABILITY

[0155] The onboard display device in accordance with the present invention improves on visibility, road safety, and ease in operation. The device is applicable as an onboard display device mounted, for example, to an automobile.

1. An onboard display device attached to an instrument panel of a vehicle, comprising:

a display screen having an aspect ratio of approximately 7:3 or more and approximately 32:9 or less, the aspect ratio being a width/height ratio of the display screen, the display screen having a resolution including at least 468 rows of pixels and at least 1092 columns of pixels;

wherein the display screen is divided into a first display area and a second display area.

2. The onboard display device of claim **1**, wherein the first display area has an aspect ratio of approximately 4:3 and the second display area has an aspect ratio of approximately 3:3.

3. The onboard display device of claim **1**, wherein the first display area has an aspect ratio of approximately 4:3 and the second display has an aspect ratio of approximately 4:3.

4. The onboard display device of claim **1**, wherein the first display area has an aspect ratio of approximately 15:9 and the second display area has an aspect ratio of approximately 15:9.

5. The onboard display device of claim **1**, wherein the first display area has an aspect ratio of approximately 16:9 and the second display area has an aspect ratio of approximately 16:9.

6. The onboard display device of claim **1**, wherein the first display area is for displaying a secondary image including information other than information of the vehicle, and the second display area is for displaying vehicle condition images including information of the vehicle.

7. The onboard display device of claim **6**, wherein the secondary image includes a navigation image, and the vehicle condition images include an image of a round speed display meter.

8. The onboard display device of claim **6**, further comprising:

a display control section arranged to control how the secondary image and the vehicle condition images are displayed; wherein

the secondary image includes a navigation image, and the vehicle condition images include an image of a speedometer; and

the display control section produces an enlarged view of the navigation images using a portion of the second display area, and produces an image of a speedometer in the shape of a horizontal bar or a vertical bar.

9. The onboard display device of claim **6**, further comprising:

a display control section arranged to control how the secondary image and the vehicle condition images are displayed; wherein

the secondary image includes a navigation image, and the vehicle condition images include an image of a speedometer; and

the display control section produces an enlarged view of the navigation images using a portion of the second display area, and produces an image of a speedometer including numbers in digit form.

10. The onboard display device of claim **6**, further comprising:

a display control section arranged to control how the secondary image and the vehicle condition images are displayed; wherein

when producing an enlarged view of the secondary image, the display control section uses a portion of the second display area to display the secondary image, and alters a manner in which the vehicle condition images are displayed.

11. A vehicle comprising the onboard display device of claim **1**.

* * * * *