S. H. LIBBY.

ELECTRIC HOIST.

APPLICATION FILED SEPT. 13, 1917.

1,347,785. **Patented July 27, 1920.**

Fig. 1.

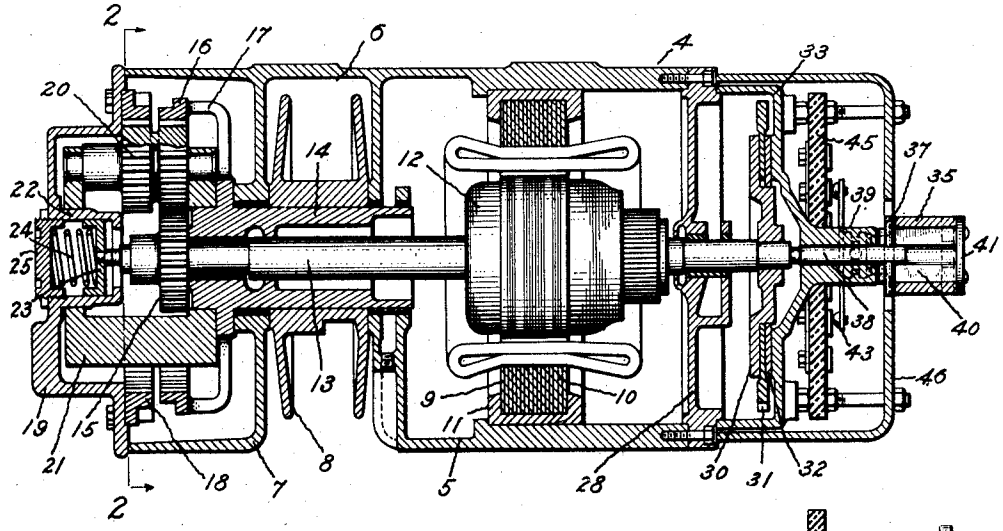

Fig. 3.

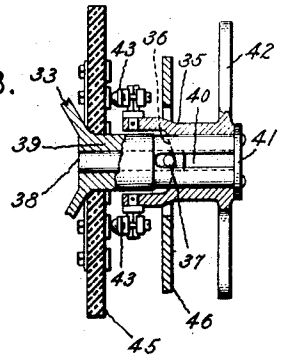

Fig. 2.

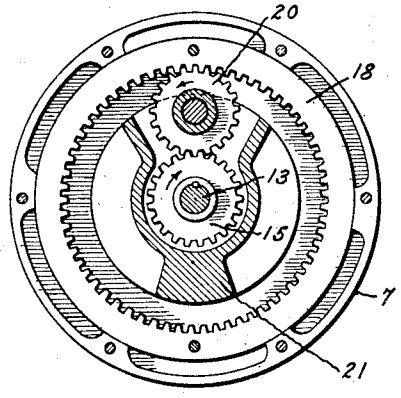

Inventor:
Sam H. Libby,
by Albert G. Davis
His Attorney.

UNITED STATES PATENT OFFICE.

SAM H. LIBBY, OF EAST ORANGE, NEW JERSEY, ASSIGNOR TO GENERAL ELECTRIC COMPANY, A CORPORATION OF NEW YORK.

ELECTRIC HOIST.

1,347,785. Specification of Letters Patent. Patented July 27, 1920.

Application filed September 13, 1917. Serial No. 191,120.

To all whom it may concern:

Be it known that I, SAM H. LIBBY, a citizen of the United States, residing at East Orange, county of Essex, State of New Jersey, have invented certain new and useful Improvements in Electric Hoists, of which the following is a specification.

This invention relates to electric hoists and has for its object the provision of an improved type which is rugged, compact and readily manufactured.

More specifically my invention is designed to produce a hoist that may be readily transported from place to place or used in connection with cranes and to this end, the hoisting gear, driving motor and controller are rigidly secured to the same supporting frame. Such an arrangement affords a compact construction and permits the several parts to be operatively secured together about substantially the same axis of symmetry.

Further objects of this invention will appear from the following detailed description when taken in connection with the accompanying drawings in which Figure 1 is a section taken on a vertical plane passing through one form of hoist constructed in accordance with my invention while Fig. 2 is a vertical section taken on line 2 2 of Fig. 1. Fig. 3 is a view showing details of construction.

Referring to the drawings, 4 denotes a casing which as shown in the drawing is a casting provided with a motor inclosure 5, an inclosure 6 for the hoisting drum 8 and also a housing 7 for the reduction gearing. A stator or stationary part 9 of the motor is secured on the inside of this casing so as to be concentric therewith as shown. This stator is preferably formed by casting the laminations 10 into a frame 11 which after being machined is fitted into the casing and secured thereto. The armature or revolving part 12 of the motor is mounted to revolve within the field frame and drive the drum 8 through the reduction gearing. To this end the motor shaft 13 has a bearing in the sleeve 14 to which sleeve the drum 8 is rigidly secured. The shaft is geared to sleeve 14 through the reduction gearing comprising gear 15 secured to the motor shaft and annular gear 16 suitably secured to the sleeve 14 by means of arms 17. A second annular gear 18 is secured to the end frame 19 of the housing 7 and a double pinion 20 is mounted to mesh with these two annular gears. This double pinion 20 is mounted on a frame 21 which rotates concentrically with the motor shaft 13, one of its bearings being upon the extension of the sleeve 14 while its other bearing is the inwardly extending end bearing 22. The two gears constituting the double pinion 20 are of different diameters so that as the double pinion rotates around the motor shaft the annular gear 16 will be forced to rotate since the other annular gear 18 is fixed. It will be seen, therefore, that as the motor shaft rotates, it will rotate the double pinion and supporting frame around the motor shaft as an axis and that since the diameters of these pinions are different there will be relative movement between the annular gears meshing therewith, hence the movable gear 16 and the sleeve to which it is secured will rotate the drum 8 at reduced speed.

The motor shaft 13 is arranged to have a slight axial movement and to this end is provided with a plunger 23 working interiorly of the end bearing 22 arranged to be pressed by a spring 24 against the end of the shaft 13 which projects into the gear housing 7. The spring 24 is kept in place and the tension thereof adjusted by the screw cap 25 which closes the outer end of the end bearing 22. The other end of the shaft 13 has a bearing in the head 28 which is bolted to the inclosure 5.

The friction brake for the motor comprises a disk 30, secured on the end of the motor shaft 13 which projects through head 28, having a friction surface 31 which cooperates with a stationary friction surface 32 mounted on a spider 33, which two surfaces are pressed together by spring 24 to apply a braking force to the motor shaft which slightly shifts it to the right. The motor shaft is moved to the left so as to release the brake by turning the controller shaft 35 to start the motor. To effect this movement the controller shaft is provided with a cam surface at 36 engaging with the pin or projection 37 on the plunger 38, which abuts against the end of shaft 13. This plunger reciprocates in the hub-like extension 39 of the spider 33, the pin or projection 37 moving in the slot 40 provided therefor in the extension 39. In the form here shown, the controller shaft 35 is sleeved

over the outer end of this extension and is kept from being displaced by the cap 41. The controller shaft is also provided with a handle or operating arms 42 and contact arms 43 which engage with electrical contacts on the insulating support 45. The insulating support is mounted on the spider 33 and a suitable casing 46 is provided on the end of the motor inclosure 5 as a housing for the friction brake and controller. The controller employed is preferably of that type which controls both directions of rotation of the motor by moving the handle one way or the other from an "off" or neutral position. The usual electrical connections to the motor and resistance elements for the controller have been omitted from the drawing for the sake of clearness.

The mode of operation of my invention as here disclosed is as follows:

A cable which is wound on the hoisting drum 8 having been connected to an object to be hoisted; the motor is started by moving the controller handle 42 from "off" position to start the motor. This movement of the controller handle disengages the friction members 31 and 32 of the friction brake by reason of the axial movement of the shaft 13 against spring 24, permitting the motor to freely rotate the drum 8.

When the controller is again moved to "off" position, the movement of the controller shaft to this position permits the spring 24 to move the shaft 13 to the right so that the friction members 31 and 32 again engage and hold the drum 8 in the position at which the motor was stopped.

While I have thus described in detail what is at present the best means known to me for carrying out an embodiment of my invention, I would have it understood that it is merely illustrative and that I do not mean to be limited thereby to the exact details shown nor in the choice of mechanical equivalents except as defined in my claim hereunto appended.

What I claim as new and desire to secure by Letters Patent of the United States, is,—

An electric hoist comprising a casing, an electric motor therein having its armature longitudinally movable and spring pressed in one direction, a friction member secured to the armature shaft and coöperating with a stationary member to form a brake, reduction gearing at one end of said casing, a hoisting drum between the motor and the reduction gearing and driven thereby, a controller secured to the opposite end of the casing, and means whereby the movement of the controller handle shifts the armature shaft against the spring pressure to release the brake.

In witness whereof, I have hereunto set my hand this tenth day of September, 1917.

SAM H. LIBBY.