June 9, 1964 M. J. RUDERIAN 3,136,550

COMBINED CARRIER AND STAND FOR A ROTATABLE CHANCE DEVICE

Filed Aug. 28, 1962 2 Sheets-Sheet 1

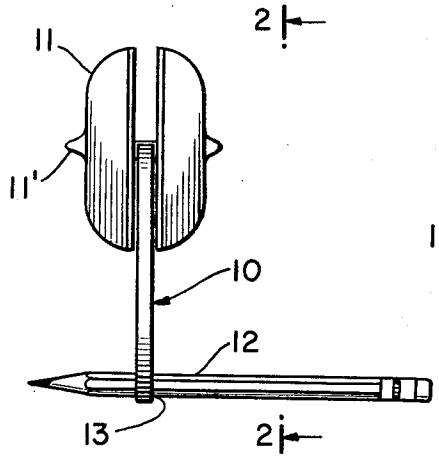

FIG. 1

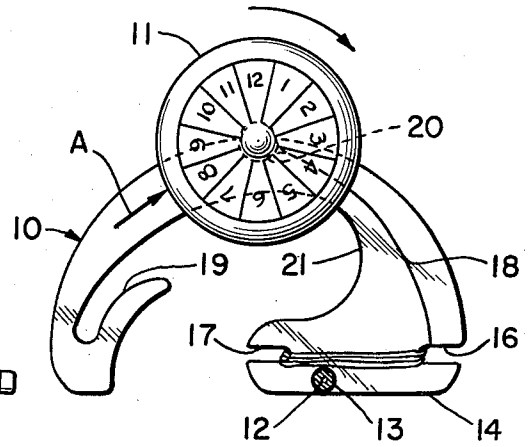

FIG. 2.

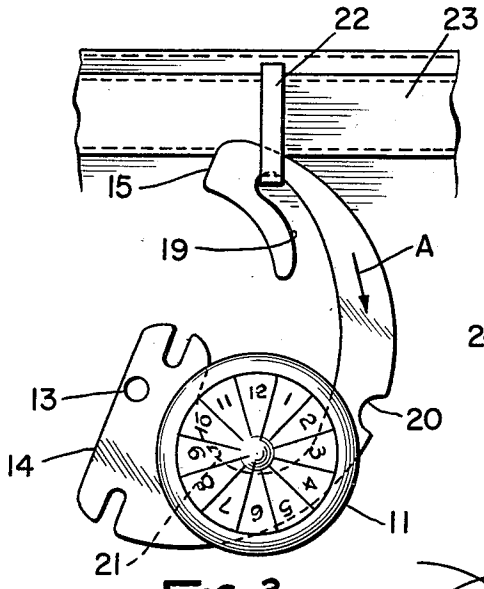

FIG. 3.

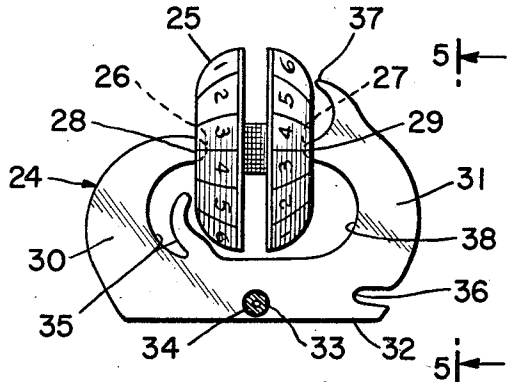

FIG. 4.

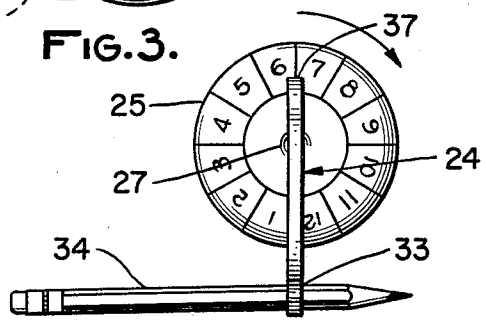

FIG. 5.

INVENTOR.
MAX J. RUDERIAN

BY

Elliott & Pastoriza
ATTORNEYS

June 9, 1964 M. J. RUDERIAN 3,136,550

COMBINED CARRIER AND STAND FOR A ROTATABLE CHANCE DEVICE

Filed Aug. 28, 1962 2 Sheets-Sheet 2

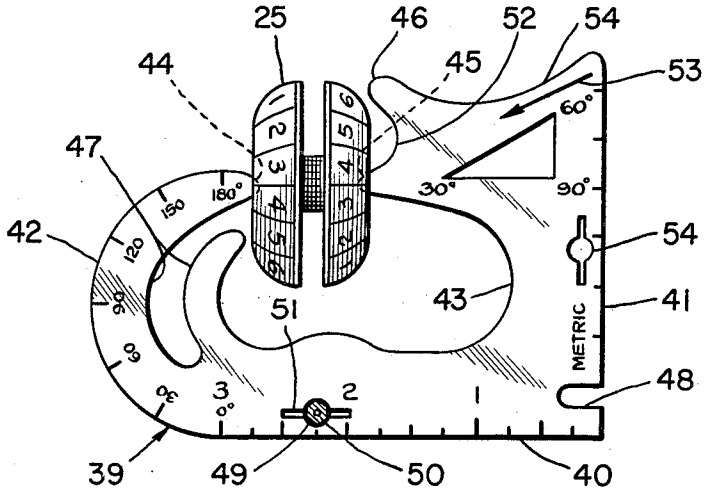

FIG. 6.

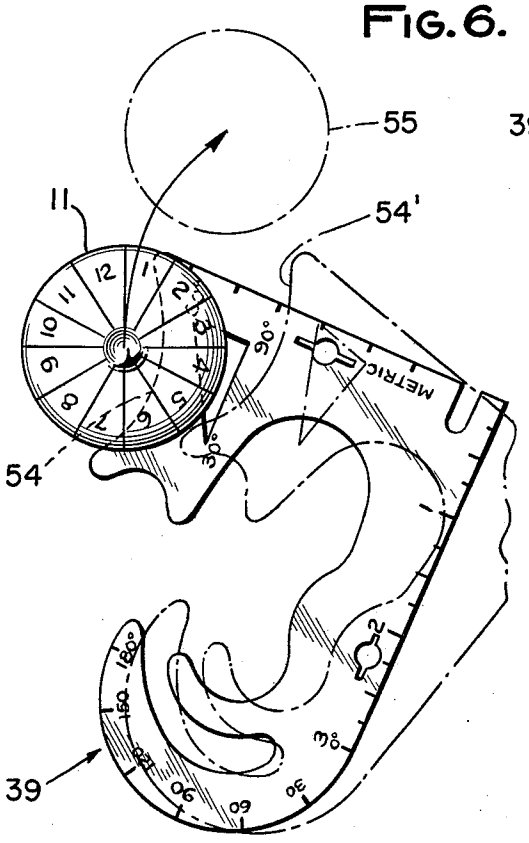

FIG. 8.

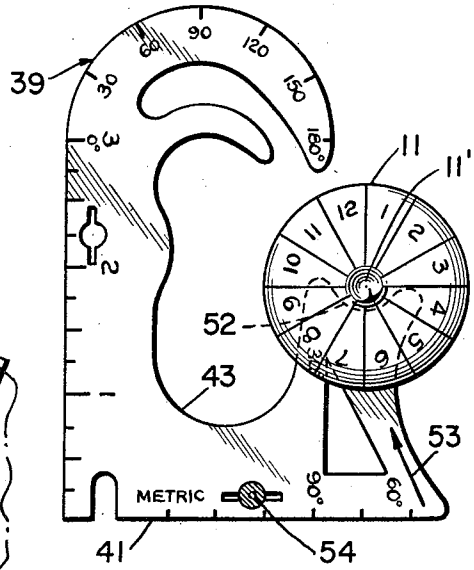

FIG. 7.

INVENTOR.
MAX J. RUDERIAN

BY

Elliott & Pastoriza
ATTORNEYS

United States Patent Office

3,136,550

Patented June 9, 1964

3,136,550

COMBINED CARRIER AND STAND FOR A ROTATABLE CHANCE DEVICE

Max J. Ruderian, 545 Hanley Ave., Los Angeles 49, Calif.

Filed Aug. 28, 1962, Ser. No. 219,972
8 Claims. (Cl. 273—142)

This invention relates to an accessory toy for use with an amusement device of the type comprising a rotatable member adapted to be wound and unwound on a cord or string.

In my co-pending patent applications Serial No. 205,729, filed June 27, 1962, entitled Amusement Device, and Serial No. 205,998, filed June 28, 1962, entitled Child's Toy, there are disclosed amusement devices similar to conventional "Yo-Yo's" but incorporating additional features rendering them more versatile and attractive to a user. In these prior applications, a salient feature of each of the devices disclosed is the provision of some type of marking either on the surface or within hollow portions and visible through a window. A particular marking will then be designated by an indicating means depending upon the rest position assumed by the rotatable member being spun. This spinning may be effected by the cord or string or carried out on a flat surface in the manner of a top.

While amusement devices of the foregoing type are attractive and easy to use, there are instances in which it is not feasible to rotate the "Yo-Yo" by its string or spin it on a flat surface. It would be desirable accordingly to be able to spin the "Yo-Yo" structure or rotatable member about a stationary axis and permit it to come to rest.

Another problem with "Yo-Yo's" of all types is the inconvenience of carrying the "Yo-Yo's" about. If the "Yo-Yo" is simply placed in a person's pocket, it is not only bulky, but the string or cord for the "Yo-Yo" may become unwound and tangled.

With all of the foregoing in mind, it is a primary object of this invention to provide a novel accessory for use with a rotatable member such as a "Yo-Yo" for both supporting the "Yo-Yo" to enable it to be spun and thence come to rest about a stationary axis and also for carrying the "Yo-Yo."

More particularly, it is an object to provide an accessory for a "Yo-Yo" which functions to support the "Yo-Yo" for rotation about a fixed axis and enables the "Yo-Yo" to be suspended from the side of a persons's pocket, belt, or similar portion of a person's clothing in a manner such that it will be comfortable and its cord or string will not become tangled.

Still another important object is to provide an accessory of the foregoing type including novel means enabling the same to be oriented in different positions on a flat surface and yet in which the entire structure may be formed from a single stamping operation.

Another object is to provide an accessory for a "Yo-Yo" meeting the foregoing objects which also includes straight edges, curved portions, and angle indicia useful in making drawings and making linear and angular measurements.

Another object is to provide an accessory facilitating the spinning of a "Yo-Yo" when used as a top.

Briefly, these and many other objects and advantages of this invention are attained by providing an accessory for a rotatable member in the form of a single integral stamping having various curved portions adapted to support a "Yo-Yo" in a position such that the same may be spun and permitted to come to rest. The stamping includes indicating means juxtaposed a peripheral portion of the "Yo-Yo" when placed on the stamping so that markings on one or both sides of the "Yo-Yo" will be designated when the same comes to rest.

The stamping itself includes at least one straight edge portion adapted to rest on a flat surface as a support for the same, the stamping including an opening adjacent the edge through which an object such as a pencil may be received to extend normally from the plane of the stamping. This object in cooperation with the straight edge portion will serve to support the stamping in a generally vertical plane.

The stamping includes portions defining curved slots. The curved slot is disposed oppositely to a shallow curved portion serving as a carrying support for the "Yo-Yo" itself when it is not supported on the rotatable supporting means. The arrangement is such that the curved slot may be hooked to a wearer's belt or belt tie or to the edge of a wearer's pocket to conveniently support the "Yo-Yo." In this latter position, the axis of rotation of the "Yo-Yo" is normal to the plane of the stamping.

In a particular embodiment of the invention, dual support means are provided for different types of "Yo-Yo's," which dual support means are formed within the integral single stamping.

A better understanding of the preferred embodiments of the invention will be had by now referring to the accompanying drawings, in which:

FIGURE 1 is an edge-on elevational view of a first embodiment of the accessory as used in conjunction with one type of "Yo-Yo" showing the same in operative position;

FIGURE 2 is a side elevational view taken in the direction of the arrows 2—2 of FIGURE 1;

FIGURE 3 is a side elevational view illustrating the manner in which the device of FIGURES 1 and 2 may be employed to carry the "Yo-Yo";

FIGURE 4 is a side elevational view of a modified type of accessory for a different type of "Yo-Yo";

FIGURE 5 is an end view taken in the direction of the arrows 5—5 of FIGURE 4;

FIGURE 6 is a side elevational view of still another embodiment incorporating dual supporting means for a "Yo-Yo" wherein a "Yo-Yo" is shown positioned in a first one of the supporting means;

FIGURE 7 is another side view similar to FIGURE 6 illustrating the manner in which the accessory is employed to support a different type of "Yo-Yo" in a second supporting means; and,

FIGURE 8 is another side view with the accessory positioned in a horizontal plane to illustrate the manner in which it may be employed to spin a "Yo-Yo."

Referring first to FIGURE 1, there is shown the accessory member in the form of an integral stamping **10** supporting a "Yo-Yo" **11** which may include raised tapered central portions such as **11'** so that the "Yo-Yo" can function as a top. The "Yo-Yo" **11** may be of a type such as described in my co-pending patent application Serial No. 205,998, filed June 28, 1962, for Child's Toy.

As shown, the single integral stamping **10** is supported in part by a pencil **12** passed through an opening **13** such that the pencil **12** extends substantially normally from the plane of the stamping **10**.

The stamping may better be understood by reference to FIGURE 2 wherein it will be noted that the lower edge portion constitutes a straight edge **14** and a smaller straight edge portion **15** defining two spaced base points cooperating with the pencil **12** to provide a stable support. Opposed notches **16** and **17** directed generally towards each other serve as a suitable means for winding the string **18** of the "Yo-Yo." The end of the string **18** is coupled to the "Yo-Yo" loosely as is conventional in "sleeper" type "Yo-Yo" constructions. The stamping also includes portions defining a curved slot **19**, concave upper curve **20**, and shallower curve **21** juxtaposed to the curved slot **19**. The "Yo-Yo" itself is supported in the concave curve at the upper end of the stamping **10**.

With particular reference to FIGURE 3, it will be noted that the curved slot 19 is arranged to receive a belt tie 22 for a belt 23 worn by the user. The "Yo-Yo" 11 in turn has been removed from the concave curve 20 and supported over the shallower curve 21. Thus, the "Yo-Yo" may easily be carried about by the same stamping employed to support the "Yo-Yo" for spinning purposes. The pencil 12, of course, is removed prior to positioning the device as illustrated in FIGURE 3.

In operation, it will be noted that the particular "Yo-Yo" is provided with markings such as numerals on one face. Further, the stamping itself includes an arrow A serving as an indicating pointer and so positioned as to be juxtaposed the markings on one of the faces of the "Yo-Yo" 11 when the same is positioned in the concave curve or cradle 20.

With a pencil passed through the opening 13 as illustrated in FIGURES 1 and 2, and the "Yo-Yo" positioned in the cradle 20, the same may be spun manually about an axis normal to the plane of the stamping as indicated by the arrow B in FIGURE 2. The point at which it comes to rest will then position one of the various markings opposite the arrow A and a game of chance is thus provided.

In the event a type of "Yo-Yo" is employed in which the string is rigidly attached to the inside of the "Yo-Yo" shaft, it is possible to modify the supporting means in such a manner as to support the "Yo-Yo" for rotation about an axis lying in the plane of the stamping. Thus, with reference to FIGURE 4, there is shown a stamping 24 for supporting a modified type of "Yo-Yo" 25 having central depressions 26 and 27 for receiving opposed spaced bearing points 28 and 29 defined at the ends of upwardly extending curved portions 30 and 31. The bottom of the stamping includes a straight edge portion 32 and a suitable opening 33 for a pencil 34 to function in the same manner described for the stamping in FIGURES 1 and 2. A curved slot portion 35 forming a counterpart to the curved slot portion 19 in the embodiment of FIGURE 4 may cooperate with a notched cutout portion 36 for winding a string thereabout if desired. In the stamping of FIGURE 4, there may be provided an upper pointed portion 37 disposed juxtaposed the peripheral surface of the "Yo-Yo" to serve as an indicating means. The end view of the device of FIGURE 4 is illustrated in FIGURE 5 wherein the manner in which the pencil supports the structure is illustrated.

In the operation of the device shown in FIGURES 4 and 5, the opposed points 28 and 29 may be biased apart slightly to receive the indented opposite central portions of the "Yo-Yo" 25 therebetween. The "Yo-Yo" may then be spun as indicated by the arrow C in FIGURE 5, and the pointer 37 will designate a specific marking when the "Yo-Yo" comes to rest.

As in the case of the stamping of FIGURE 3, the stamping 24 includes a shallower curved portion 38 to carry the "Yo-Yo" when the curved slot 35 is hooked to a person's belt.

Referring now to FIGURE 6, there is shown a third embodiment of the invention comprising an integral stamping 39 which combines the features of the stamping illustrated in FIGURES 1–3 and FIGURES 4 and 5. As shown, stamping 39 includes a first straight edge portion 40 and an additional straight edge portion 41 at right angles thereto. Also included is a first curved portion 42 of constant radius of curvature extending tangentially from the first straight edge portion 40 and extending around 180 degrees as shown. Suitable indicia on this curved portion may designate degrees so that the portion may function as a protractor if desired.

An opposite curved cradle portion 43 also extends upwardly so that the portions 42 and 43 terminate in opposed spaced first and second bearing points 44 and 45, respectively, for receiving indented central portions of a "Yo-Yo" such as the "Yo-Yo" 25 described in FIGURES 4 and 5. A pointer structure may be defined by

the upper end 46 of the stamping as shown, this pointer being similar to the pointer 37 in the embodiments of FIGURES 4 and 5. Also, as is shown in the embodiments of FIGURES 4 and 5, there may be provided a curved slot portion 47 to serve as a hook in cooperation with the cradle curve 43 to carry the "Yo-Yo" when not in use. This same curved slot also cooperates with an inwardly directed notch 48 in the second straight edge portion 41 to wind the "Yo-Yo" string or cord thereon.

In the embodiment of FIGURE 6, an opening 49 for receiving a pencil 50 to support the stamping is shown. This opening also defines a slot for receiving a ruler or elongated flat object in lieu of a pencil.

In addition to the "Yo-Yo" supporting means constituting the opposed points 44 and 45 as described, a second supporting means in the form of a curved concave portion 52 defined between the point 45 and indicator pointer 46 is provided in the embodiment of FIGURE 6. The arrangement is such that when the stamping is placed so that its additional straight edge portion 41 is horizontal as illustrated in FIGURE 7, the curved concave portion 52 serves to cradle a "Yo-Yo" of the type illustrated at 11 in FIGURES 1 and 2. A suitable arrow or other indicating means 53 may be provided or marked on the stamping as shown to be juxtaposed the periphery of the "Yo-Yo". Further, a suitable opening such as indicated at 54 and also including a lateral slot similar to the slot 51 for the opening 49 in FIGURE 6 may be provided to receive an object to support the structure in the position illustrated in FIGURE 7.

In addition to the protractor feature, it will be noted that the first and second straight edge portions 40 and 41 respectively include inch and metric divisions so that the same may serve to make linear measurements. Finally, a triangular portion may be cut out with 30, 60, and 90 degree angles as shown at T so that the stamping may function as a template for conventional purposes in drafting.

The operation of the device illustrated in FIGURES 6 and 7 is similar to the stampings described previously. Depending upon the particular type of "Yo-Yo" used, the stamping is supported as shown in either FIGURE 6 or FIGURE 7 and the "Yo-Yo" in turn rotatably mounted as shown so that the same may be spun manually. When the "Yo-Yo" comes to rest, if the type illustrated in FIGURE 6 is employed, the pointer 46 will designate one of the markings so that a game may be played. If the type shown in FIGURE 7 is used, the arrow 53 will serve to indicate one of the markings.

With reference now to FIGURE 8, a further feature of the stamping illustrated in FIGURES 6 and 7 is shown. This feature comprises a relatively shallow curved portion 54 between the upper end of the second straight edge portion 41 and the indicating point 46 illustrated in FIGURE 6. This relatively shallow curved portion 54 may be placed within the slot portion of the "Yo-Yo" to stabilize the same when it is used as a top. Thus, when the "Yo-Yo" 11 is disposed horizontally to be spun on a flat surface with one of the tapered central portions such as 11' serving as a bearing support for spinning the same as a top, it may be initially stabilized when at rest by inserting the shallow curved portion 54 between the rotatable half members making up the "Yo-Yo" as illustrated in solid lines in FIGURE 8. The "Yo-Yo" may then be manually spun and the stamping flipped slightly to the dotted line position to free the "Yo-Yo" therefrom so that it will move to the position illustrated in dotted lines at 55, the "Yo-Yo" then having a spin imparted thereto so that it will spin as a top.

From the foregoing description, it will thus be evident that the present invention has provided a novel accessory for use with a rotatable member such as a "Yo-Yo." Not only is the device adaptable to different types of "Yo-Yo's" but it also includes means for facilitating the carrying of the "Yo-Yo" itself. In addition, by proper design, various contoured portions of the stamping may

be employed to draw straight or curved lines. In addition, the protractor feature enables angles to be measured.

Various modifications that fall clearly within the scope and spirit of this invention will occur to those skilled in the art. The accessory device is therefore not to be thought of as limited to the various embodiments set forth merely for illustrative purposes.

What is claimed is:

1. For use with an amusement device in the form of a rotatable member having a cord coupled thereto and adapted to be wound thereabout, said member having markings visible on a portion thereof, an accessory comprising: a single integral flat stamping having at least two base points for seating on a surface and at least one opening between said base points through which an object may be passed to extend normally from the plane of said stamping to cooperate with said base points to support said stamping in a substantially vertical plane, said stamping including curved portions defining supporting means for holding said member in a position so that it may be rotated and permitted to come to rest; and indicator means positioned to be juxtaposed said markings so that one of said markings is designated when said rotatable member comes to rest.

2. An accessory according to claim 1, in which said stamping includes portions defining a curved slot therebetween to serve as a hook for suspending said stamping, a portion of said stamping opposite said curved slot defining a cradle to carry said member after it has been removed from said supporting means.

3. An accessory according to claim 1, in which said stamping includes hook means directed substantially inwardly towards each other to define notches for winding said cord thereabout.

4. An accessory according to claim 1, in which said supporting means comprises a concave curve on the upper edge portion of said stamping adapted to cradle that portion of said rotatable member about which said cord is adapted to be wound so that the axis of rotation of said member is normal to the plane of said stamping.

5. An accessory according to claim 1, in which said supporting means comprises upwardly extending curved portions turning inwardly towards each other and terminating in spaced points for engaging central opposite sides of said rotatable member so that the axis of rotation of said member lies in the plane of said stamping.

6. An accessory according to claim 1, in which said two base points constitute part of a straight edge portion, said stamping including an additional straight edge portion at right angles to said first mentioned straight edge portion, said supporting means comprising a first curved section of fixed radius of curvature extending tangentially from said first mentioned straight edge portion for 180 degrees and terminating in a first bearing point, a portion opposite said additional straight edge portion juxtaposed said first bearing point defining a second bearing point, said first and second bearing points being adapted to engage central opposite sides of said member so that the axis of rotation of said member lies in the plane of said stamping, said supporting means also including a concave curve facing upwardly when said stamping is positioned with said additional straight edge portion serving as a base support adapted to cradle that portion of said rotatable member about which said cord is adapted to be wound so that the axis of rotation of said member is normal to the plane of said stamping.

7. An accessory according to claim 6, in which one end portion of said concave curve functions as said indicating means when said member is held between said first bearing point and said second bearing point.

8. An accessory according to claim 1, in which said stamping includes a curved portion adapted to stabilize said rotatable member when the same is spun on a flat surface to function as a top.

References Cited in the file of this patent

UNITED STATES PATENTS

2,886,323	Irwin	May 12, 1959

FOREIGN PATENTS

188,266	Great Britain	Nov. 9, 1922
405,475	Great Britain	Feb. 8, 1934
214,484	Australia	Apr. 2, 1958
1,214,989	France	Nov. 16, 1959