PCT WORLD INTELLECTUAL PROPERTY ORGANIZATION
International Bureau

INTERNATIONAL APPLICATION PUBLISHED UNDER THE PATENT COOPERATION TREATY (PCT)

(51) International Patent Classification 6 :
A61K 39/42, C12N 1/20, C12P 21/08, C07H 21/04, C07K 1/00, 16/00, G01N 33/53, 33/542

A1

(11) International Publication Number: **WO 97/34636**

(43) International Publication Date: 25 September 1997 (25.09.97)

(21) International Application Number: PCT/US97/04696

(22) International Filing Date: 19 March 1997 (19.03.97)

(30) Priority Data:
60/013,708 20 March 1996 (20.03.96) US

(60) Parent Application or Grant
(63) Related by Continuation
US 60/013,708 (CON)
Filed on 20 March 1996 (20.03.96)

(71) Applicant *(for all designated States except US)*: IMMUNOMEDICS, INC. [US/US]; 300 American Road, Morris Plains, NJ 07950 (US).

(72) Inventors; and
(75) Inventors/Applicants *(for US only)*: LEUNG, Shui-on [GB/US]; 254 Kings Road, Madison, NJ 07940 (US). LOSMAN, Michele, J. [FR/US]; 475 Berkeley Avenue, South Orange, NJ 07079 (US). HANSEN, Hans [US/US]; 2617 North Burgee Drive, Mystic Island, NJ 08087 (US).

(74) Agents: SAXE, Bernhard, D. et al.; Foley & Lardner, Suite 500, 3000 K Street, N.W., Washington, DC 20007-5109 (US).

(81) Designated States: AL, AM, AT, AU, AZ, BA, BB, BG, BR, BY, CA, CH, CN, CU, CZ, DE, DK, EE, ES, FI, GB, GE, GH, HU, IL, IS, JP, KE, KG, KP, KR, KZ, LC, LK, LR, LS, LT, LU, LV, MD, MG, MK, MN, MW, MX, NO, NZ, PL, PT, RO, RU, SD, SE, SG, SI, SK, TJ, TM, TR, TT, UA, UG, US, UZ, VN, YU, ARIPO patent (GH, KE, LS, MW, SD, SZ, UG), Eurasian patent (AM, AZ, BY, KG, KZ, MD, RU, TJ, TM), European patent (AT, BE, CH, DE, DK, ES, FI, FR, GB, GR, IE, IT, LU, MC, NL, PT, SE), OAPI patent (BF, BJ, CF, CG, CI, CM, GA, GN, ML, MR, NE, SN, TD, TG).

Published
With international search report.
Before the expiration of the time limit for amending the claims and to be republished in the event of the receipt of amendments.

(54) Title: HUMANIZATION OF AN ANTI-CARCINOEMBRYONIC ANTIGEN ANTI-IDIOTYPE ANTIBODY AND USE AS A TUMOR VACCINE AND FOR TARGETING APPLICATIONS

(57) Abstract

A humanized form of an anti-idiotype antibody to CEA, e.g., hWI2, has conserved immunoreactivity. The clinical benefits of anti-CEA antibodies are maximized by using the humanized anti-idiotype as a clearing agent for anti-CEA antibodies or antibody fragments. The humanized anti-idiotype also can be used as an immunogenic vaccine.

FOR THE PURPOSES OF INFORMATION ONLY

Codes used to identify States party to the PCT on the front pages of pamphlets publishing international applications under the PCT.

AL	Albania	**ES**	Spain	**LS**	Lesotho	**SI**	Slovenia
AM	Armenia	**FI**	Finland	**LT**	Lithuania	**SK**	Slovakia
AT	Austria	**FR**	France	**LU**	Luxembourg	**SN**	Senegal
AU	Australia	**GA**	Gabon	**LV**	Latvia	**SZ**	Swaziland
AZ	Azerbaijan	**GB**	United Kingdom	**MC**	Monaco	**TD**	Chad
BA	Bosnia and Herzegovina	**GE**	Georgia	**MD**	Republic of Moldova	**TG**	Togo
BB	Barbados	**GH**	Ghana	**MG**	Madagascar	**TJ**	Tajikistan
BE	Belgium	**GN**	Guinea	**MK**	The former Yugoslav Republic of Macedonia	**TM**	Turkmenistan
BF	Burkina Faso	**GR**	Greece			**TR**	Turkey
BG	Bulgaria	**HU**	Hungary	**ML**	Mali	**TT**	Trinidad and Tobago
BJ	Benin	**IE**	Ireland	**MN**	Mongolia	**UA**	Ukraine
BR	Brazil	**IL**	Israel	**MR**	Mauritania	**UG**	Uganda
BY	Belarus	**IS**	Iceland	**MW**	Malawi	**US**	United States of America
CA	Canada	**IT**	Italy	**MX**	Mexico	**UZ**	Uzbekistan
CF	Central African Republic	**JP**	Japan	**NE**	Niger	**VN**	Viet Nam
CG	Congo	**KE**	Kenya	**NL**	Netherlands	**YU**	Yugoslavia
CH	Switzerland	**KG**	Kyrgyzstan	**NO**	Norway	**ZW**	Zimbabwe
CI	Côte d'Ivoire	**KP**	Democratic People's Republic of Korea	**NZ**	New Zealand		
CM	Cameroon			**PL**	Poland		
CN	China	**KR**	Republic of Korea	**PT**	Portugal		
CU	Cuba	**KZ**	Kazakstan	**RO**	Romania		
CZ	Czech Republic	**LC**	Saint Lucia	**RU**	Russian Federation		
DE	Germany	**LI**	Liechtenstein	**SD**	Sudan		
DK	Denmark	**LK**	Sri Lanka	**SE**	Sweden		
EE	Estonia	**LR**	Liberia	**SG**	Singapore		

HUMANIZATION OF AN ANTI-CARCINOEMBRYONIC ANTIGEN ANTI-IDIOTYPE ANTIBODY AND USE AS A TUMOR VACCINE AND FOR TARGETING APPLICATIONS

BACKGROUND OF THE INVENTION

The present invention relates to chimeric and humanized anti-idiotype antibodies that specifically bind carcinoembryonic antigen antibodies. The invention further relates to the uses of the chimeric and humanized anti-idiotype antibodies as clearing agents in therapeutic methods, as a vaccine, and to detect in biological fluid samples the presence of an antibody or fragment thereof that specifically binds CEA.

The use of targeting monoclonal antibodies conjugated to radionuclides or other cytotoxic agents offers the possibility of delivering such agents directly to the tumor site, thereby limiting the exposure of normal tissues to toxic agents. (Goldenberg, *Semin. Nucl. Med.*, 19: 332 (1989)). In recent years, the potential of antibody-based therapy and its accuracy in the localization of tumor-associated antigens have been demonstrated both in the laboratory and clinical studies (see., e.g., Thorpe, *TIBTECH*, 11: 42 (1993); Goldenberg, *Scientific American, Science & Medicine*, 1: 64 (1994); Baldwin *et al.*, U.S. 4,925,922 and 4,916,213; Young, U.S. 4918163; U.S. 5,204,095; Irie *et al.*, U.S. 5,196,337; Hellstrom *et al.*, U.S. 5,134,075 and 5,171,665). In general, the use of radiolabeled antibodies or antibody fragments against tumor-associated markers for localization of tumors has been more successful than for therapy, in part because antibody uptake by the tumor is generally low, ranging from only 0.01% to 0.001% of the total dose injected (Vaughan *et al.*, *Brit. J. Radiol.*,

60: 567 (1987)). Increasing the concentration of the radiolabel to increase the dosage to the tumor is counterproductive generally as this also increases exposure of healthy tissue to radioactivity.

Carcinoembryonic antigen (CEA) is a 180,000-Da glycoprotein expressed in most adenocarcinomas of endodermal-derived digestive-system epithelia and in some other types of cancer such as breast cancer and non-small-cell lung cancer. One of the main advantages of the CEA system is that AB1 anti-CEA have been extensively used as radioimmunodetection agents in cancer patients. One such antibody, MN-14, is a murine IgG_1K monoclonal antibody (Mab) with high affinity ($K_D = 10^{-9}M$) for human CEA. In cancer patients, ^{131}I-MN-14 targets CEA-producing tumors effectively, and radiolabled MN-14-Fab' can detect lesions as small as 2 cm in diameter.

Rat anti-idiotype antibody (rWI2) against an anti-carcinoembryonic antigen antibody (MN-14) has been considered as a potential idiotype vaccine, capable of eliciting an Ab3 response in immunized animals. Losman *et al.*, *Int. J. Cancer* 56: 580-584 (1994). It has also been shown that WI2 can serve as an effective clearing agent improving tumor/nontumor ratios and reducing myelotoxicity, when used to remove excess radiolabeled MN-14, as shown, for example, in U.S, Patent 4,624,846, the entire contents of which are incorporated herein by reference. However, its use is limited by the short biological half life of the rat Ab, due to rejection by the human host.

SUMMARY OF THE INVENTION

It is an object of the present invention to provide a chimeric anti-idiotype Ab with anti carcinoembryonic-antibody properties, a humanized anti-idiotype Ab with anti carcinoembryonic-antibody properties as an immunological reagent useful in clearing an organism of anti-CEA antibody initially used as a cancer treatment, diagnostic, or vaccine, where the anti-idiotype Ab has the immunogenic properties of a human MAb in a human patient, and to provide an anti-idiotype Ab with anti carcinoembryonic-antibody properties which can serve as a detection agent or vaccine. It is another object of the present invention to provide DNA constructs encoding such antibodies.

To achieve these objectives, in one aspect of the invention, a chimeric anti-idiotype antibody or fragment thereof which specifically binds to the idiotype region of an anti-CEA monoclonal antibody is provided, comprising the rWI2 light chain and heavy chain variable regions, or silent mutations thereof. In a preferred embodiment, the heavy chain variable region comprises the ratWI2VK sequence shown in Figure 1 and the light chain variable region comprises the RatWI2VK sequence shown in Figure 2.

In another aspect of the invention, a humanized anti-idiotype antibody or fragment thereof which specifically binds the idiotype region of an anti-CEA monoclonal antibody is provided, comprising rWI2 CDR regions and humanized FR regions. In a preferred embodiment, the heavy chain variable region comprises the KOLWI2VH-1 or the KOLWI2VH-2 sequence shown in Figure 1 and the light chain variable region comprises the REIWI2VK or the REIWI2VKRS sequence shown in Figure 2.

In another aspect of the invention, an isolated polynucleotide encoding the heavy chain or the heavy chain variable region of a chimeric or humanized antibody or antibody fragment which specifically binds the idiotype region of an anti-CEA monoclonal antibody is provided, comprising sequences encoding at least two rWI2 heavy chain CDRs, selected from the group of CDRs consisting of:
the complementary determining region -1 (CDR-1) sequence NYWMT,
the complementary determining region -2 (CDR-2) sequence SITSTGGTYHAESVKG, and
the complementary determining region -3 (CDR-3) sequence DDYGGQSTYVMDA.

In another aspect of the invention, an isolated polynucleotide encoding the light chain or the light chain variable region of a chimeric or humanized antibody or antibody fragment which specifically binds the idiotype region of an anti-CEA monoclonal antibody is provided, comprising sequences encoding at least two rWI2 CDRs, selected from the group of CDRs consisting of:
the complementary determining region -1 (CDR1) sequence RASQDIGNYLR,
the complementary determining region -2 (CDR2) sequence GATNLAA, and
the complementary determining region -3 (CDR3) sequence LHHSEYPYT.

In another aspect of the invention, an isolated first expression vector comprising a gene for the chimeric WI2 heavy chain and an isolated second expression vector comprising a gene for the chimeric WI2 light chain are provided.

In another aspect of the invention, an isolated first expression vector comprising a gene for a humanized WI2 heavy chain and an isolated second expression vector

comprising a gene for a humanized WI2 light chain are provided.

In another aspect of the invention, a host is provided, comprising an isolated first vector comprising a gene for the chimeric WI2 heavy chain and an isolated second expression vector comprising a gene for the chimeric WI2 light chain, or an isolated first expression vector comprising a gene for a humanized WI2 heavy chain and an isolated second expression vector comprising a gene for a humanized WI2 light chain.

In another aspect of the invention, a method of stimulating an immune response in a patient against cancers expressing carcinoembryonic antigen is provided, which comprises administering to a patient an effective amount of a vaccine comprising a humanized anti-idiotype antibody or fragment which specifically binds the idiotype region of an anti-CEA monoclonal antibody, conjugated to a soluble immunogenic carrier protein, optionally in combination with a pharmaceutically acceptable vaccine adjuvant.

In another aspect of the invention, a method of diagnosis or treatment of a patient is provided, wherein an antibody or antibody fragment that specifically binds CEA is used as a targeting, pre-targeting or therapy agent, either as such or as a component of a conjugate, the improvement to the method consisting of an anti-idiotype antibody used to clear non-targeted antibody or antibody fragment.

In another aspect of the invention, a method of detecting the presence of an antibody or fragment that specifically binds CEA, in a fluid biological sample, comprising contacting the sample with rWI2, or a chimeric anti-idiotype antibody or antibody fragment which specifically binds the idiotype region of an anti-CEA

monoclonal antibody, or a humanized anti-idiotype antibody or antibody fragment which specifically binds the idiotype region of an anti-CEA monoclonal antibody, and detecting binding of said anti-idiotype antibody or antibody fragment to an antibody idiotype or antibody idiotype fragment in said sample.

DESCRIPTION OF THE FIGURES

Figure 1 shows the design of the hVH. The rVH is shown aligned with KOL, and with the designed KOLW2VH-1 and 2 sequences. Dashes indicate that the sequence matches at that position the rWI2VK sequence. Narrow boxes indicate positions where the rat aa was retained in the humanized FR sequences. Note that the KOLWI2VK-1 sequence contains an extra rat aa, when compared with KOLWI2VK-2, at position 5. CDRs are indicated by wider boxes and are labeled above the respective box as CDR1 to CDR3.

Figure 2 shows the design of hVK. The RATWI2VK sequence is shown aligned with REI, and with the designed REIWI2VK and REIWI2VKRS. Dashes indicate that the sequence matches at that position the RATWI2VK sequence. Narrow boxes indicate positions where the rat aa was retained in the humanized FR sequences. As indicated, four rat aa residues where retained in the FR regions. CDRs are indicated by wider boxes and are labeled above the respective box as CDR1-3.

Figure 3 shows the polynucleotide sequence for the hWI2 heavy chain variable region. The PCR primers employed and the synthesized oligo K and oligo L described in the text are indicated. A single aa letter code is given below the polynucleotide sequence to represent the translation product. The CDRs are underlined on the protein sequence.

Figure 4 shows the polynucleotide sequence for the hWI2 light chain variable region. The PCR primers employed and the synthesized oligo M' and oligo N described in the text are indicated. A single aa letter code is given below the polynucleotide sequence for the translation product. The CDRs are underlined on the protein sequence.

Figure 5 shows a comparison between hWI2(RS), hWI2, cWI2, and rWI2 in competitive binding assays. Binding of each of these antibodies is shown as a percentage of inhibition of the binding by a peroxidase conjugated MN-14 antibody.

Figure 6 shows the nucleic acid sequence for the variable region of rWI2 light chain. The protein translation product is indicated below the nucleic acid sequence, using one letter aa code. The aa residues representing CDRs 1-3 are underlined and labeled.

Figure 7 shows the nucleic acid sequence for the variable region of rWI2 heavy chain. The protein translation product is indicated below the nucleic acid sequence, using one letter aa code. The aa residues representing CDRs 1-3 are underlined and labeled.

ILLUSTRATIVE GLOSSARY

The following terms or abbreviations are used in the present application. The meanings set out in this glossary are for illustrative purposes only. The full meaning of the terms will be apparent to those of skill in the art.

"CDR" is used as an abbreviation for Complementarity Determining Region. These are the regions within the variable regions of an antibody that are primarily, but

not exclusively, responsible for antigen-antibody binding.

"FR" is an abbreviation for Framework Region. Broadly speaking, these are the portions of the variable regions of an antibody which lie adjacent to or flank the CDRs. In general, these regions have more of a structural function that affects the conformation of the variable region and are less directly responsible for the specific binding of antigen to antibody, although, nonetheless, the framework regions can affect the interaction.

An **"antibody-binding region"** is that part of an antibody that overall is responsible for maintaining the structure of the antibody that interacts with the antigen. Generally, that is the combined light and heavy variable domains of an antibody.

As used herein, **"Chimeric"** refers to an antibody in which the variable region is derived from a rat antibody and the constant region is derived from a human antibody.

"Humanized" refers to a chimeric antibody as defined above, but in which the FR variable regions are modified to make them more similar in sequence to a human antibody.

A **promoter** is a DNA sequence that directs the transcription of a structural gene. Typically, a promoter is located in the 5′ region of a gene, proximal to the transcriptional start site of a structural gene. If a promoter is an inducible promoter, then the rate of transcription increases in response to an inducing agent. In contrast, the rate of transcription is not regulated by an inducing agent if the promoter is a constitutive promoter.

An **isolated DNA molecule** is a fragment of DNA that is not integrated in the genomic DNA of an organism. For example, a cloned T cell receptor gene is a DNA fragment that has been separated from the genomic DNA of a mammalian cell. Another example of an isolated DNA molecule is a chemically-synthesized DNA molecule that is not integrated in the genomic DNA of an organism.

Complementary DNA (cDNA) is a single-stranded DNA molecule that is formed from an mRNA template by the enzyme reverse transcriptase. Typically, a primer complementary to portions of mRNA is employed for the initiation of reverse transcription. Those skilled in the art also use the term "cDNA" to refer to a double-stranded DNA molecule consisting of such a single-stranded DNA molecule and its complementary DNA strand.

The term **expression** refers to the biosynthesis of a gene product. For example, in the case of a structural gene, expression involves transcription of the structural gene into mRNA and the translation of mRNA into one or more polypeptides.

A **cloning vector** is a DNA molecule, such as a plasmid, cosmid, or bacteriophage, that has the capability of replicating autonomously in a host cell. Cloning vectors typically contain one or a small number of restriction endonuclease recognition sites at which foreign DNA sequences can be inserted in a determinable fashion without loss of an essential biological function of the vector, as well as a marker gene that is suitable for use in the identification and selection of cells transformed with the cloning vector. Marker genes typically include genes that provide tetracycline resistance or ampicillin resistance.

An **expression vector** is a DNA molecule comprising a gene that is expressed in a host cell. Typically, gene

expression is placed under the control of certain regulatory elements, including constitutive or inducible promoters, tissue-specific regulatory elements, and enhancers. Such a gene is said to be "operably linked to" the regulatory elements.

A **recombinant host** may be any prokaryotic or eukaryotic cell that contains either a cloning vector or expression vector. This term also includes those prokaryotic or eukaryotic cells that have been genetically engineered to contain the cloned gene(s) in the chromosome or genome of the host cell.

As used herein, a **silent mutation** is a change introduced to the coding sequence of an antibody gene, which results in the expression of an antibody altered in its aa sequence, but, which is otherwise substantially similar to the antibody whose sequence was not altered, in respect to immune activity.

A **tumor associated antigen** is a protein normally not expressed, or expressed at very low levels, by a normal counterpart. Examples of tumor associated antigens include α-fetoprotein and carcinoembryonic antigen (CEA).

In the present context, an **anti-CEA MAb** is a Class III MAb, as described by Primus *et al., Cancer Research 43*: 686 (1983) and by Primus *et al.*, U.S. patent No. 4,818,709, which are incorporated by reference.

As used herein, an **Ab1** is an antibody that binds with a tumor associated antigen.

An **anti-idiotype antibody (Ab2)**, as used herein, is an antibody that binds with an Ab1. Importantly, an Ab2 binds with the variable region of Ab1 and thus, an Ab2 mimics an epitope of a tumor associated antigen or an epitope of an infectious agent associated antigen.

An **antibody fragment** is a portion of an antibody such as $F(ab')_2$, $F(ab)_2$, Fab', Fab, and the like. Regardless of structure, an antibody fragment binds with the same antigen that is recognized by the intact antibody. For example, an anti-CEA Mab (Ab1) fragment binds with CEA, while an Ab2 fragment binds with the variable region of the Ab1 and mimics an epitope of CEA.

The term "antibody fragment" also includes any synthetic or genetically engineered protein that acts like an antibody by binding to a specific antigen to form a complex. For example, antibody fragments include isolated fragments consisting of the light chain variable region, "Fv" fragments consisting of the variable regions of the heavy and light chains, recombinant single chain polypeptide molecules in which light and heavy variable regions are connected by a peptide linker ("sFv proteins"), and minimal recognition units consisting of the amino acid residues that mimic the hypervariable region.

As used herein, the term **antibody component** or the term **antibody** may include both an entire antibody and an antibody fragment.

Vaccine as used in the present context is an antibody or antibody fragment which is engineered to more effectively stimulate an immune response. Typically, this is achieved by conjugation of the antibody component to a soluble immunogenic carrier protein.

DETAILED DESCRIPTION OF THE INVENTION

An overview. Providing chimeric and humanized WI2 anti-idiotype antibodies.

Rat WI2 (rWI2) is an anti-idiotype monoclonal antibody which binds the CDR of MN-14. See Losman *et*

al., (1994) *supra*. It was previously proposed that PCR primer pairs may be designed which might isolate the variable regions of rat antibodies from a RNA substrate. See Kutemeier *et al.*, *Hybridoma*, 11: 23-32 (1992). Similar approaches have been employed to isolate the variable regions of mouse antibodies. See Orlandi *et al.*, *Proc. Nat'l Acad. Sci. USA 86*: 3833 (1989). In the present invention, a combination of PCR primers as described by Kutemeier *et. al.*, and by Orlandi *et al.*, *supra*, are required to isolate the rWI2 variable region. These primers could be used to isolate other rat variable regions.

cDNA for the variable regions of both the light and heavy chains of rWI2 are isolated and the sequence from a number of clones is confirmed. The rat variable regions are cloned into plasmid vectors, such that the rat variable K and H regions are attached to respective human IgG constant regions. The plasmids are transfected into SP2/0 cells, clones comprising both plasmids are selected, and chimeric WI2 (cWI2) antibody is expressed.

To humanize the variable regions, FR rat regions are replaced by the human IgG counterparts. The rat CDR regions are preserved, in order to maintain the specificity of the antibody. However, to enhance stability and maintain specificity and binding affinity of the antibody, it is best to employ a human sequence which is most similar to the newly identified rat FR sequences. Rat residues that are close to the CDRs, or known from prior experience to be important for interactions with the CDRs, were retained in both humanized sequences.

For both the heavy and light chain, long oligonucleotides corresponding to the variable region are engineered to reflect the humanized design. The oligonucleotides replace the rat variable region in

plasmid constructs designated to produce full length human WI2 (hWI2). The effectiveness of cWI2 or hWI2 are compared with that of rWI2 in assays where they compete with CEA for binding to a peroxidase conjugated MN-14.

In order to express the cWI2 and the hWI2s, the rat and the humanized variable regions are inserted into one or separate plasmid vectors in such a manner as to allow coexpression of full length light and heavy antibody chains. The vectors can be transfected into SP2/0 cells. Selection of transfected cells, and eventual amplification of the clones, are based on the expression of the *dihydrofolate reductase* (DHFR) gene which is located on the same plasmid vector. The functionality of various constructs is determined by binding assays. For example, final hWI2 constructs were compared with both rWI2 and cWI2 in their ability to bind MN-14 -- see Figure 5.

Production of Monoclonal Ab1 and Ab2 Antibodies

Rodent monoclonal antibodies to specific antigens may be obtained by methods known to those skilled in the art. See, for example, Kohler and Milstein, *Nature* 256: 495 (1975), and Coligan *et al.* (eds.), CURRENT PROTOCOLS IN IMMUNOLOGY, VOL. 1, pages 2.5.1-2.6.7 (John Wiley & Sons 1991) [hereinafter "Coligan"]. Briefly, monoclonal antibodies can be obtained by injecting rats with a composition comprising an antigen, verifying the presence of antibody production by removing a serum sample, removing the spleen to obtain B-lymphocytes, fusing the B-lymphocytes with myeloma cells to produce hybridomas, cloning the hybridomas, selecting positive clones which produce antibodies to the antigen, culturing the clones that produce antibodies to the antigen, and isolating the antibodies from the hybridoma cultures. These techniques are applicable for production of a monoclonal antibody from other mammals injected with an antigen.

A wide variety of monoclonal antibodies against tumor associated antigens or infectious agents have been developed. See, for example, Goldenberg *et al.*, international application publication No. WO 91/11465 (1991), and Goldenberg, international application publication No. WO 94/04702 (1994), each of which is incorporated herein by reference in its entirety.

Polyclonal Ab2 can be prepared by immunizing animals with Ab1 or fragments, using standard techniques. See, for example, Green *et al.*, "Production of Polyclonal Antisera," in METHODS IN MOLECULAR BIOLOGY: IMMUNOCHEMICAL PROTOCOLS, Manson (ed.), pages 1-12 (Humana Press 1992). Also, see Coligan at pages 2.4.1-2.4.7. Alternatively, monoclonal Ab2 can be prepared using Ab1 or fragments as immunogen with the techniques described above.

MAbs can be isolated and purified from hybridoma cultures by a variety of well-established techniques. Such isolation techniques include affinity chromatography with Protein-A Sepharose, size-exclusion chromatography, and ion-exchange chromatography. See, for example, Coligan at pages 2.7.1-2.7.12 and pages 2.9.1-2.9.3. Also, see Baines *et al.*, "Purification of Immunoglobulin G (IgG)," in METHODS IN MOLECULAR BIOLOGY, VOL. 10, pages 79-104 (The Humana Press, Inc. 1992).

The Design of a Humanized Antibody

One antibody of the present invention is a "humanized" monoclonal antibody. That is, rat complementarity determining regions are transferred from heavy and light variable chains of the rat immunoglobulin into a variable region designed to contain a number of aa residues found within the FR region in human IgG. Similar conversion of mouse/human chimeric antibodies to a humanized antibody has been described before. General techniques for cloning murine immunoglobulin variable

domains are described, for example, by the publication of Orlandi *et al., Proc. Nat'l Acad. Sci. USA 86*: 3833 (1989), which is incorporated by reference in its entirety. Techniques for producing humanized MAbs are described, for example, by Jones *et al., Nature 321*: 522 (1986), Riechmann *et al., Nature 332*: 323 (1988), Verhoeyen *et al., Science 239*: 1534 (1988), Carter *et al., Proc. Nat'l Acad. Sci. USA 89*: 4285 (1992), Sandhu, *Crit. Rev. Biotech. 12*: 437 (1992), and Singer *et al., J. Immun. 150*: 2844 (1993), each of which is hereby incorporated by reference.

Construction of cWI2 and hWI2.

The engineering of chimeric and humanized WI2 employs standard molecular biology and cellular biology approaches, for example PCR reactions, sequencing of DNA, synthesis of long oligonucleotides, cloning, site-directed mutagenesis, transfection of vectors into cells, expression of chimeric and humanized antibodies, their purification and so on. The techniques employed are standard techniques, well known in the art and well established. A person skilled in the art would have no difficulty carrying out those techniques. All necessary materials are readily available. Reference manuals describing these techniques are widely available. For example, see Sambrook *et al., Molecular Cloning: A Laboratory Manual*, second ed., Cold Spring Harbor Press, (1989); Co *et al., J. Immunol., 148*: 1149 (1992); Ausubel *et al.*, eds., CURRENT PROTOCOLS IN MOLECULAR BIOLOGY, and updates, John Wiley & Sons, NY, (1987); "Protocols - Current Methods and Applications" White, ed., *Methods in Mol. Biol. (15)*, Humana Press, Totawa, New Jersey (1993); Uhlmann, *Gene* 71: 29 (1998); Wosnick *et al., Gene* 60: 115 (1988); and Huse, in ANTIBODY ENGINEERING: A PRACTICAL GUIDE, Boerrbaeck, ed., W.H. Freeman & Co., 103-120 (1992).

The PCR primers used in the initial cloning of the rat variable region are designed over regions of the sequence that are expected to be relatively conserved between human antibodies. Furthermore, an amino acid (aa) can generally be represented by more than one codon, although the codons often differ only in the third position. Such codons are sometimes referred to as "degenerate." To design the PCR primer one attempts to choose a protein sequence over which degenerate codons are limited in number. The approach is further limited by the need to design over a conserved protein sequence, as discussed above. Therefore, often, the "primer" as designed actually consists of a mix of numerous molecules that differ in sequence at specific positions. Any one primer molecule, which would provide a perfect match for the specific mRNA substrate to be amplified is present as a minuscule fraction of the overall primer mix. To enhance likelihood of success, a few primer pairs, *i.e.* covering different regions of the mRNA are generally tried.

One skilled in the art recognizes that alternative techniques are readily available. For example, initial changes to the cloned rat variable region could be introduced by any of a number of site specific mutagenesis protocols. Furthermore, it should be realized that additional aa changes in the variable and especially the FR regions may be possible, with the expectation that there will be some changes which would be silent in nature. Silent changes are those replacements, deletion or addition of one or a small number of aa that would not significantly affect the binding affinity or specificity of the antibody or antibody fragments thereof. Most obvious among such silent changes would be the replacement of one aa by an aa of a similar size and chemical properties. Such changes are well known in the art and are generally referred to as a "conservative" aa substitution. For

example, a leucine when replaced by an isoleucine would generally not be expected to affect the structure of a protein. All such conserved aa changes, as well as silent changes which do not significantly affect the binding affinity or specificity of the anti-carcinoembryonic antibody, are within the scope of the invention.

Expression of the Engineered cWI2 or hWI2

Genes encoding the antibodies of the invention are introduced via expression vectors into a host cell, for expression. In a preferred embodiment, the genes for both the light and heavy genes areintroduced in a single expression vector, which is introduced in a host cell. The expression vectors generally contain drug markers for selection of the transformed cell. A drug marker can furthermore be used to amplify the copy number of nearby genes, resulting in a clone overexpressing the antibody. For example, a vector expressing the light and heavy chains of cWI2 or hWI2 were introduced into SP2/0 cells on vectors containing the DHFR gene. The original clones were amplified after selection by growth on methotrexate (MTX).

It should be understood that alternative ways to coexpress the light and heavy chain genes are feasible. A skilled artisan could consider other selection regimens, introduction of both the light and heavy chain genes on one plasmid or cotransformation with separate vectors encoding theight and heavy genes, and transfection of other cell lines. Furthermore, expression of the antibody in yet other systems is possible. For example, expression could occur in yeast. Alternatively, baculoviruses can be engineered with the light and heavy genes and expressed in cultured cells, or used to infect an insect.

The antibodies require purification from their expression system and media by methods that are generally similar to methods described above for purification of MAbs from hybridomas.

Uses for the Antibodies of the Invention

Humanized monoclonal antibodies in accordance with the invention are suitable for use in therapeutic methods. For example, MN-14 has been proposed as a therapeutic agent or as a vaccine to stimulate Ab2. The dosage of MN-14 conjugated to a drug can be enhanced if removal or clearing of unbound MN-14 is made possible by its binding, and aggregate formation, with hWI2. Similarly, MN-14 can be used as a vaccine, optionally by alternative applications with an anti-idiotype antibody vaccine. Delivery of the Ab2 would be counterproductive in the presence of excess, free-floating MN-14 vaccine. Here, hWI2, for example, would clear the MN-14 vaccine, to allow efficient administration of the Ab2 vaccine.

In addition, hWI2 itself can be a vaccine. Generally, the antibodies and fragments of the present invention can be used as vaccines by conjugating the antibodies or fragments to a soluble immunogenic carrier protein. Suitable carrier proteins include keyhole lympet hemocyanin, which is the preferred carrier protein. The antibodies and fragments can be conjugated to the carrier protein using standard methods. See, for example, Hancock *et al*, "Synthesis of Peptides for Use as Immunogen," in METHODS IN MOLECULAR BIOLOGY: IMMUNOCHEMICAL PROTOCOLS, Manson (ed.), pages 23-32 (Humana Press 1992).

A preferred vaccine composition comprises an antibody conjugate or fragment conjugate, and an adjuvant. Examples of suitable adjuvant include aluminum hydroxide and lipid. Methods of formulating vaccine compositions are well-known to those of ordinary skill in the art.

See, for example, Rola, "Immunizing Agents and Diagnostic Skin Antigens," in REMINGTON'S PHARMACEUTICAL SCIENCES, 18th Edition, Gennaro (ed.), pages 1389-1404 (Mack Publishing Company 1990).

Additional pharmaceutical methods may be employed to control the duration of action of a vaccine in a therapeutic application. Controlled release preparations can be prepared through the use of polymers to complex or adsorb the antibodies or fragments. For example, biocompatible polymers include matrices of poly(ethylene-co-vinyl acetate) and matrices of a polyanhydride copolymer of a stearic acid dimer and sebacic acid. Sherwood *et al.*, *Bio/Technology* 10: 1446 (1992). The rate of release of an antibody or antibody fragment from such a matrix depends upon the molecular weight of the antibody or fragment, the amount of antibody or fragment within the matrix, and the size of dispersed particles. Saltzman *et al.*, *Biophys. J.* 55: 163 (1989); Sherwood *et al.*, *supra*. Other solid dosage forms are described in Ansel *et al.*, PHARMACEUTICAL DOSAGE FORMS AND DRUG DELIVERY SYSTEMS, 5th Edition (Lea & Febiger 1990), and Gennaro (ed.), REMINGTON'S PHARMACEUTICAL SCIENCES, 18th Edition (Mack Publishing Company 1990).

The anti-idiotype Ab of the invention can be used for the detection of an anti-carcinoembryonic antibody. For example, rWI2, cWI2 and hWI2 can be used *in vitro* to test the blood sample of a patient for the presence of anti-carcinoembryonic antibody. Detection of MN-14 levels, when MN-14 is used as a therapeutic agent or as a vaccine would be important. Presence of MN-14 can be detected by rWI2, cWI2, or hWI2. Similarly, hWI2 can be used in a patient to determine the presence of natural anti-CEA Abs. To be useful in the detection of an anti-CEA Ab, the anti-idiotype Abs can be conjugated to a label. Suitable labels include, e.g., a radiolabel, an enzyme,

or a fluorescent label. Such labeling agents and methods of conjugation are well known to one skilled in the art.

The antibody preparations of the present invention can be formulated according to known methods to prepare pharmaceutically useful compositions, whereby antibodies or antibody fragments are combined in a mixture with a pharmaceutically acceptable carrier. A composition is said to be a "pharmaceutically acceptable carrier" if its administration can be tolerated by a recipient mammal. Sterile phosphate-buffered saline is one example of a pharmaceutically acceptable carrier. Other suitable carriers are well-known to those in the art. See, for example, Ansel *et al.*, PHARMACEUTICAL DOSAGE FORMS AND DRUG DELIVERY SYSTEMS, 5th Edition (Lea & Febiger 1990), and Gennaro (ed.), REMINGTON'S PHARMACEUTICAL SCIENCES, 18th Edition (Mack Publishing Company 1990).

The antibodies or fragments may be administered to a mammal intravenously or subcutaneously. Moreover, the administration may be by continuous infusion or by single or multiple boluses. Preferably, an antibody vaccine is administered subcutaneously, while an antibody preparation that is not a vaccine is administered intravenously. In general, the dosage of administered antibodies or fragments for humans will vary depending upon such factors as the patient's age, weight, height, sex, general medical condition and previous medical history. Typically, it is desirable to provide the recipient with a dosage of antibodies or fragments which is in the range of from about 1 pg/kg to 10 mg/kg (amount of agent/body weight of patient), although a lower or higher dosage also may be administered as circumstances dictate.

For purposes of therapy, antibodies or fragments are administered to a mammal in a therapeutically effective amount. An antibody preparation is said to be

administered in a "therapeutically effective amount" if the amount administered is physiologically significant. An agent is physiologically significant if its presence results in a detectable change in the physiology of a recipient mammal. In particular, an antibody preparation of the present invention is physiologically significant if its presence invokes a humoral and/or cellular immune response in the recipient mammal.

The present invention, in addition to the specifically described techniques, cell lines, and vectors, relies on descriptions of said techniques, cell lines, and vectors presented in U.S. Patents # 5,443,953, and 4,624,846 and in U.S. Patent Applications Serial Nos. 08/318,157, and 08/289,576, all of which are incorporated herein by reference in their entireties.

Example 1

Humanization of the WI2 Clone

The sequences encoding the WI2 VH and VK domains were obtained by reverse transcriptase followed by PCR reactions (RT-PCR) using RNA prepared from WI2 hybridomas as the templates. Since the WI2 antibody sequences were of rat origin, the Orlandi VH1FOR/BACK and VK1FOR/BACK primers sets might not be useful for their PCR-cloning. See Orlandi *et al.*, 1989, *supra*. Based on the sequences suggested by Kutemeier *et al.*, *supra*, primers were synthesized the following sets of primers for the PCR cloning of the VH and VK domains of WI2:

(RCH1) 5'-GAC GTA TAC CTG TGG TTT TCT G-3',
(RVH-1BACK) 5'-AGG TSM ARC TGC AGS AGT CWG G-3', and
(RVH-1FOR) 5'-TGA GGA GAC GGT GAC CGT GGT CCC TTG GCC CC-3',
where S=G+C; M=A+C; R=A+G; and W=A+T, and

(RK1) 5'-GGA TGA TGT CTT ATG AAC AA-3',
(RVK-1BACK) 5'-CCA GTT CCG AGC TCG TGC TCA CCC AGT CTC CA-3',
(RVK-2BACK) 5'-CCA GTT CCG AGC TCC AGA TGA CCC AGT CTC CA-3',

(RVK-3BACK) 5'-CCA GAT GTG AGC TCG TGA TGA CCC AGA CTC CA-3',
(RVK-4BACK) 5'-CCA GAT GTG AGC TCG TCA TGA CCC AGT CTC CA-3',
(RVK-5BACK) 5'-CCA GTT CCG AGC TCG TGA TGA CAC AGT CTC CA-3', and
(RVK-1FOR) 5'-GTT AGA TCT CCA GCT TGG TCC C-3'.

The cloning of VH sequence

First-strand cDNA was prepared from total RNA isolated from WI2 hybridoma using random hexamers as the annealing primers. RCH1 (which anneals to the rat IgG1 CH1 domain) and RVH-1BACK (which anneals to rat 5' VH region) were tried as a primer pair to PCR-amplify and isolate the VH sequence from the first-strand cDNA template, using standard protocols. However, no PCR product was obtained. Unexpectedly, the RCH1 primer, in conjunction with the Orlandi primer VH1BACK (5'-AGG TSM ARC TGC AGS AGT CWG G-3') produced a PCR product of the expected size. The PCR-amplified VH sequence was digested with the restriction enzymes PstI/BstEII and subcloned into the corresponding sites of the heavy chain staging vector, VHpBS. See Leung *et al.*, *Hybridoma* 13: 469 (1994). Six individual clones were sequenced and confirmed to be identical to each other. RVH-1FOR which anneals to rat 3' VH region and RVH-1BACK also produced a PCR product of the expected size, which was not further analyzed. Figure 7 shows the sequence of the heavy chain variable region.

The cloning of VK sequence

First-strand cDNA was prepared from total RNA isolated from WI2 hybridoma using random hexamers as the annealing primers. The RK1 (which anneals to rat CK domain) in conjunction with RVK-3BACK (which anneal to the 5' VK region), was used to PCR-amplify and isolate the VK region of rWI2, employing standard PCR protocols. The expected 320 base pairs (bp) product was obtained. The PCR product was further analyzed. Other primer pairs

were not tested. Figure 6 shows the sequence of the light chain variable region.

Restriction analysis of the 320 bp VK PCR product revealed the presence of an additional PvuII site which would interfere with subsequent cloning into the PvuII/BcII sites of the staging vector, VKpBR. *Id.* Because the PCR product lacked the appropriate ends for the staging vector, it was directly subcloned into the *TA Cloning Vector* (Invitrogen), which allowed for direct insertions of PCR DNA. Six individual clones were sequenced and all six were shown to be identical. Analysis of the deduced protein sequence indicated a functional VK domain. To subclone the sequence into a staging vector, a new primer was designed. In this primer, a PvuII compatible end, rather than the whole restriction recognition site, was introduced so that the PCR product would have on its 5' end a compatible site for ligation into the corresponding PvuII site within the VKPBR staging vector. The PCR product was digested with BglII and subcloned into the PvuII/BcII cloning sites of the VKpBR staging vector. *Id.* The ligation was transformed in *E. coli*, and plated on selective plates. Miniprep DNA was prepared and analyzed. DNA from positive clones were sequenced to make sure that the joining region, at the PvuII site, was as expected. The PCR-amplified VH and VK sequence for WI2 were excised from their respective staging vector by HindIII/BamHI restriction digestion and the isolated fragments were subcloned into their respective heavy and light chain expression vectors, pG1g and pKh. *Id.* Chimeric WI2 (cWI2) was purified from clones cotransfected with the heavy and light chain expression vectors and the immunoreactivity of cWI2 was compared to that of rat WI2. Results indicated that both antibodies inhibited the binding of MN-14 onto CEA to a similar extent, confirming the functionality of the chimeric antibody, and the authenticity of the VH and VK sequences.

Design of the Humanized WI2 Sequence

VH and VK design

By comparing the sequence homology of a number of human IgG to the rWI2 frame work region, the human KOL framework was chosen for grafting the heavy chain CDRs. Two versions of the humanized heavy chain designated as KOLWI2VH-1 and KOLWI2VH-2 were designed. See Figure 1. However, only the KOLWI2VH-1 was synthesized and tested. KOLWI2VH-1 differs from KOLWI2VH-2 only by one amino acid at position 5(Q instead of V). Rat residues that are close to the CDRs, or known from prior experience to be important for interactions with the CDRs, were retained in both humanized sequences. A total of 5 rat residues were retained in the FR region of the humanized WI2 heavy chain sequence KOLWI2VH-1. The KOLWI2VH-2 sequence would have retained four rat aa residues.

The REI framework was chosen for grafting the light chain CDRs. Four rat residues were retained in the FR region of the designed light chain. The sequence of the designed light chain, REIWI2VK is shown in Figure 2.

Gene synthesis for humanized WI2 VH and VK domain

Using computer analysis, the nucleotide sequences encoding the humanized VH and VK domain of WI2 were assembled as follows.

hWI2 VH

The long oligo K (135-mer) was PCR-amplified using the flanking primers oligo 21 (45-mer) and oligo 22 (54-mer). The PCR product for oligo K encodes for the N-terminal half of the VH domain. Similarly, the long oligo L (133-mer) was PCR-amplified using the flanking primers oligo 23 (48-mer) and oligo 24 (45-mer). The PCR product for oligo L encodes for the C-terminal half of the VH domain. The sequences of the different oligos used for the PCR-synthesis of the humanized WI2 VH domain are summarized in Figure 3.

The PCR product for oligo K was digested with PstI/AlwNI, whereas the PCR product for oligo L was digested with AlwNI/BstEII. The K and L fragments were gel-purified and ligated to the PstI/BstEII site of the staging, vector VHpBR. Minipreps were analyzed by restriction analysis as well as by sequencing reaction. MP33#4(1.6.95) was confirmed to have the correct sequence for the hWI2 VH, and was used for subsequent cloning and subcloning. The BamHI/HindIII fragment containing the hWI2 VH domain was gel-purified from the DNA after restriction digestion, and was cloned into the corresponding sites of the heavy chain expression vector, pG1g. Leung *et al. Hybridoma* 13:469 (1994).

hWI2 VK

The long oligo M' (129-mer) was PCR-amplified using the flanking primers oligo 25 containing a PvuII site and oligo 26. The PCR product for oligo M' encodes for the N-terminal half of the VK domain. The long oligo N (127-mer) was PCR-amplified by the flanking primers oligo 27 (44-mer) and oligo 28 (39-mer). The PCR product for oligo N encodes for the C-terminal half of the VK domain. The sequences of the oligonucleotides used for the PCR-amplification of the humanized WI2 VK domain are summarized in Figure 4.

The PCR product for oligo M' was digested with PstI and PvuII, whereas the PCR product for oligo N was digested with PstI/BglII. The M and N fragments were gel-purified and ligated to the PvuII/BcII site of the staging vector VKpBR. By analysis of miniprep DNA three clones were identified to be the likely positives for hWI2VKpBR. Hogness stocks for these three minipreps were prepared. The sequence was confirmed from both directions, crossing the PvuII and BglII/BcII junctions. Plasmid DNA was prepared. The BamHI/HindIII fragment containing the hWI2 VK domain was gel-purified from the DNA after restriction digestion, and was cloned into the

corresponding sites of the light chain expression vector, pKh. *Id*. Plasmid DNA for both the heavy and light chain vectors expressing hWI2 were prepared and cotransfected into SP2/O myeloma cells by electroporation.

A total of eight antibody producing colonies were identified using ELISA assays. The three highest producers were maintained and cell aliquots were frozen for storage. The highest producer was expanded and upscaled for subsequent antibody purification and testing.

Examining the immunoreactivity of hWI2 heavy chain in a mix-and-match experiment

The mix-and-match antibody containing the humanized heavy and chimeric light chains of WI2 was purified. Various concentrations of the mix-and-match antibody were used to compete with ELISA-plate coated CEA for binding to the peroxidase-conjugated MN-14 antibody. Chimeric Ab was produced and expressed and shown to have immunogenic reactivity comparable to that of the rat WI2. The immunoreactivity of the mix-and-match WI2 was compared to that of cWI2, which has been confirmed to be identical to that of rat WI2. The humanized heavy chain for WI2 maintained the original immunoreactivity of rat WI2.

<u>WI2</u>

The original sequences for humanized WI2 heavy and light chains were designed from sequence homology comparison without the aid of computer modeling (Figure 2). In a competitive binding assay, the first version of humanized WI2 (hWI2) was shown to be slightly less effective in blocking the binding of peroxidase conjugated MN-14 to CEA, as compared to that of rWI2 and cWI2 (Figure 5). In the mix-and-match experiment (rVK + hVH) described above, it was demonstrated that the design of the humanized heavy chain was good. Therefore, a redesign of the humanized VK sequence was undertaken in

an attempt to restore the full immunoreactivity of hWI2. Studies on the crystal structure for REI protein suggested that the rat residues Arg (66) and Ser (69) might be interacting with the light chain CDRs. These two rat residues, arg and ser were reintroduced into the VK FR3 of hWI2 by site-directed mutagenesis. The newly designed light chain, REIWI2VKRS is shown in figure 2. Humanized WI2 containing these two mutations was designated as hWI2RS. All mutations and vector constructions were confirmed by sequencing as well as by extensive restriction analysis. Expression vectors for this new version of humanized light chain (hWl2RSpKh) were used for transfection experiments by electroporation.

For unknown reasons, it had been difficult to get antibody producing clones transfected with the hWl2RS expression vector. Clones 131A9 and 132F7 were identified as positive clones producing about 0.4 and 0.2 mg/liter of hWl2RS antibodies, respectively. One liter cultures of clone 131A9 and 132F7 were grown in roller bottles and the antibody was purified by a standard protein purification method. Approximately 0.4 and 0.2 mg of hWl2RS was obtained from clone 131A9 and 132F7, respectively. The immunoreactivities of 131A9 and 132F7 hWl2RS, as measured by their abilities to block MN-14 binding on CEA, were shown to be similar.

Example 2

Comparing the immunoreactivities of different versions of WI2

In one experiment, the immunoreactivities of hWI2 and hWI2RS, as measured by their abilities to block MN-14 binding on CEA, were compared to that of rWI2 and cWI2, respectively (Figure 5). Both hWI2 and hWI2RS appeared to exhibit a slightly reduced immunoreactivities than that of rWI2 and cWI2. The introduction of the RS mutation into the FR3 region of hWI2 did not seem to improve immunoreactivity as predicted. Nevertheless, hWI2 was nearly as immunoreactive as rWI2 or cWI2.

Both hWI2 and hWI2RS exhibited very similar, if not identical, immunoreactivity. Since hWI2RS contains two extra rat residues in the light chain FR3 region, and would be potentially more immunogenic the first humanized version of WI2, hWI2, was chosen to be the antibody that was further scaled up for production.

Example 3

Construction of an amplifiable expression vector for hWI2

The VH and VK sequence for hWI2 were excised from the respective staging vectors and ligated to a single amplifiable vector, pdHL2. The pdHL2 vector contains sequences for the human CK, IgG1, and an amplifiable DHFR gene, each controlled by separate promoters. See Leung *et al., Tumor Targeting* 2:184 (#95) (1996) and Losman *et al., Tumor Targeting* 2:183 (#93) (1996). The resultant vector expressing the hWI2 was designated hWI2pdHL2. The plasmid DNA for hWI2pdHL2 was linearized and transfected by electroporation into SP2/0 cells. Selection was performed by the addition of 0.1 μM of methotrexate (MTX) into the culture media. Amplification was carried out in a stepwise fashion with increasing concentration of MTX

(from 0.1 to 3 μM). hWI2 purified from amplified clones exhibited identical immunoreactivity as hWI2 obtained from previous non-amplifiable clones.

WHAT IS CLAIMED IS:

1. A chimeric anti-idiotype antibody or fragment thereof which specifically binds to the idiotype region of an anti-CEA monoclonal antibody, comprising the rWI2 light chain and heavy chain variable regions, or silent mutations thereof.

2. A humanized anti-idiotype antibody or fragment thereof which specifically binds the idiotype region of an anti-CEA monoclonal antibody, comprising rWI2 CDR regions and humanized FR regions.

3. An isolated polynucleotide encoding the heavy chain or the heavy chain variable region of a chimeric or humanized antibody or antibody fragment according to claim 1 or 2, comprising sequences encoding at least two rWI2 heavy chain CDRs, selected from the group of CDRs consisting of:
the complementary determining region -1 (CDR-1) sequence NYWMT,
the complementary determining region -2 (CDR-2) sequence SITSTGGTYHAESVKG, and
the complementary determining region -3 (CDR-3) sequence DDYGGQSTYVMDA.

4. An isolated polynucleotide encoding the light chain or the light chain variable region of a chimeric or humanized antibody or antibody fragment according to claim 1 or 2, comprising sequences encoding at least two rWI2 light chain CDRs, selected from the group of CDRs consisting of:
the complementary determining region -1 (CDR1) sequence RASQDIGNYLR,
the complementary determining region -2 (CDR2) sequence GATNLAA, and
the complementary determining region -3 (CDR3) sequence LHHSEYPYT.

5. A chimeric anti-idiotype antibody according to claim 1, wherein said heavy chain variable region comprises the ratWI2VK sequence shown in Figure 1.

6. A chimeric anti-idiotype antibody according to claim 1, wherein said light chain variable region comprises the RatWI2VK sequence shown in Figure 2.

7. A humanized anti-idiotype antibody according to claim 2, wherein the heavy chain variable region comprises the KOLWI2VH-1 or the KOLWI2VH-2 sequence shown in Figure 1.

8. A humanized anti-idiotype antibody according to claim 2, wherein the light chain variable region comprises the REIWI2VK or the REIWI2VKRS sequence shown in Figure 2.

9. An isolated expression vector comprising a first gene for the WI2 heavy chain and second gene for the WI2 light chain.

10. An isolated expression vector according to claim 9 wherein said light and heavy chains are chimeric or are humanized.

11. A host comprising said expression vector according to claim 9.

12. An isolated first expression vector comprising a gene for WI2 heavy chain and an isolated second expression vector comprising a gene for the WI2 light chain.

13. An isolated first and second expression vectors according to claim 12, wherein said genes are for chimeric or humanized WI2 light and heavy chain.

14. A host comprising said first and second expression vectors according to claim 12.

15. A method of stimulating an immune response in a patient against cancers expressing carcinoembryonic antigen, which comprises administering to said patient an effective amount of a vaccine comprising the humanized anti-idiotype antibody or antibody fragment of claim 2, conjugated to a soluble immunogenic carrier protein, optionally in combination with a pharmaceutically acceptable vaccine adjuvant.

16. In a method of diagnosis or treatment of a patient, wherein an antibody or antibody fragment that specifically binds CEA is used as a targeting, pre-targeting or therapy agent, either as such or as a component of a conjugate,

the improvement wherein an anti-idiotype antibody according to claim 2 is used to clear non-targeted antibody or antibody fragment.

17. A method of detecting the presence of an antibody or fragment thereof that specifically binds CEA, in a biological fluid sample, comprising contacting said sample with rWI2, or a chimeric anti-idiotype antibody or antibody fragment according to claim 1, or a humanized anti-idiotype antibody or antibody fragment according to claim 2, and detecting binding of said anti-idiotype antibody or antibody fragment to an antibody idiotype or antibody idiotype fragment in said sample.

18. A method according to claim 16, wherein said anti-idiotype antibody or antibody fragment is labeled with a radiolabel, an enzyme, or a fluorescent agent.

19. A vaccine, comprising the humanized anti-idiotype antibody or antibody fragment of claim 2, conjugated to a soluble immunogenic carrier protein, for

use in stimulating an immune response in a patient against a cancer characterized by expression of CEA.

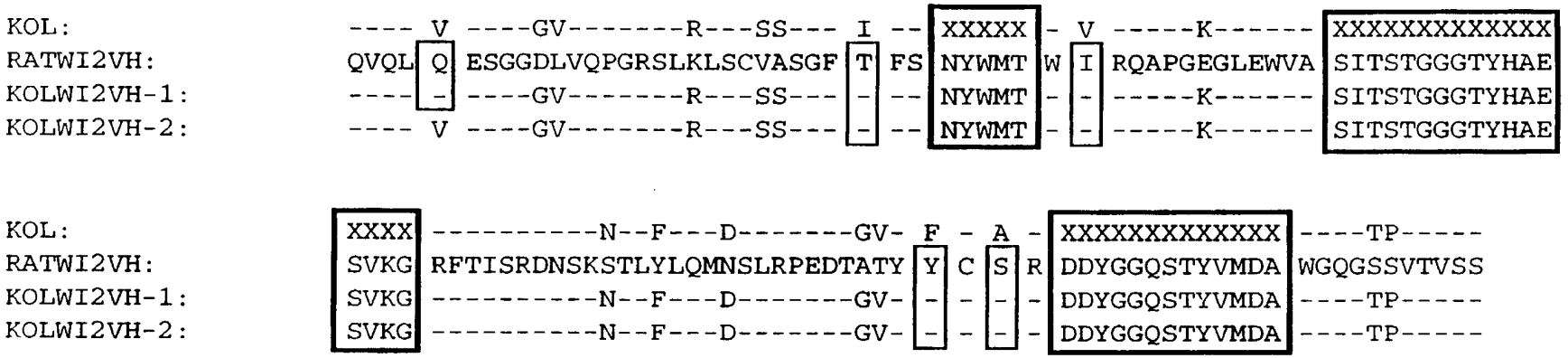
KOL: ---- V ----GV-------R---SS--- I -- XXXXX - V -----K------ XXXXXXXXXXXXX
RATWI2VH: QVQL Q ESGGDLVQPGRSLKLSCVASGF T FS NYWMT W I RQAPGEGLEWVA SITSTGGGTYHAE
KOLWI2VH-1: ---- - ----GV-------R---SS--- - -- NYWMT - - -----K------ SITSTGGGTYHAE
KOLWI2VH-2: ---- V ----GV-------R---SS--- - -- NYWMT - - -----K------ SITSTGGGTYHAE
KOL: XXXX ----------N--F---D-------GV- F - A - XXXXXXXXXXXXX ----TP-----
RATWI2VH: SVKG RFTISRDNSKSTLYLQMNSLRPEDTATY Y C S R DDYGGQSTYVMDA WGQGSSVTVSS
KOLWI2VH-1: SVKG ----------N--F---D-------GV- - - - - DDYGGQSTYVMDA ----TP-----
KOLWI2VH-2: SVKG ----------N--F---D-------GV- - - - - DDYGGQSTYVMDA ----TP-----

FIG. 1

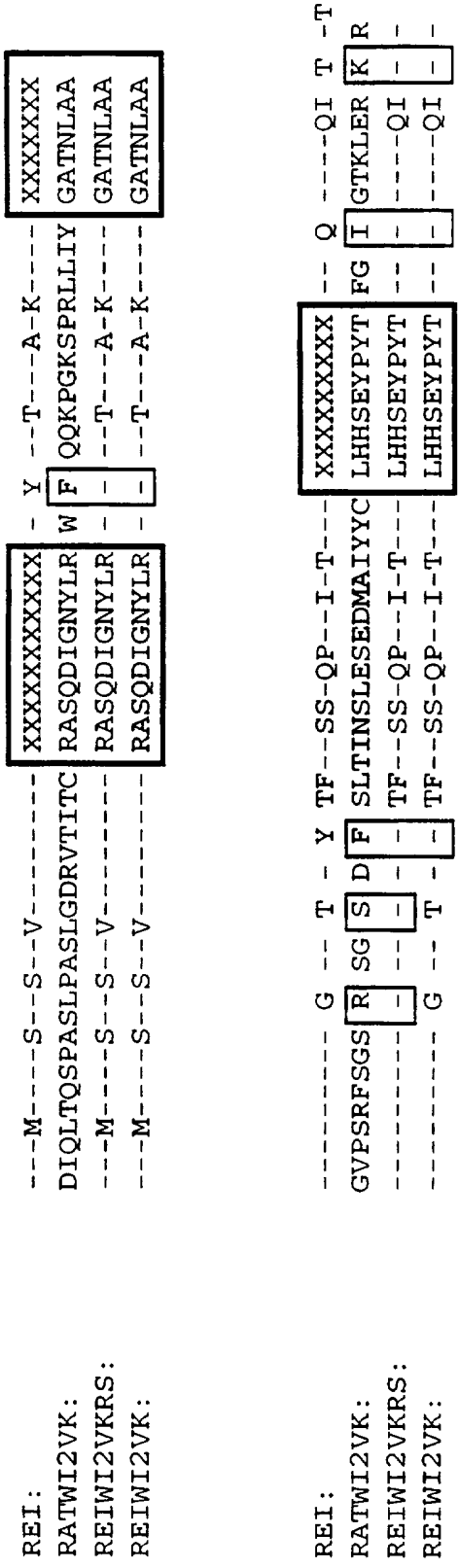
REI:
RATWI2VK:
REIWI2VKRS:
REIWI2VK:
---M----S--S--V---------
DIQLTQSPASLPASLGDRVTITC
---M----S--S--V---------
---M----S--S--V---------
XXXXXXXXXXX
RASQDIGNYLR
RASQDIGNYLR
RASQDIGNYLR
- Y --T---A-K----
W F QQKPGKSPRLLIY
- - --T---A-K----
- - --T---A-K----
XXXXXXX
GATNLAA
GATNLAA
GATNLAA
REI:
RATWI2VK:
REIWI2VKRS:
REIWI2VK:
--------- G -- T - Y TF--SS-QP--I-T---
GVPSRFSGS R SG S D F SLTINSLESEDMAIYYC
---------- - -- - - TF--SS-QP--I-T---
---------- G -- T - - TF--SS-QP--I-T---
XXXXXXXXX
LHHSEYPYT
LHHSEYPYT
LHHSEYPYT
-- Q ----QI T -T
FG I GTKLER K R
-- - ----QI - -
-- - ----QI - -

FIG.2

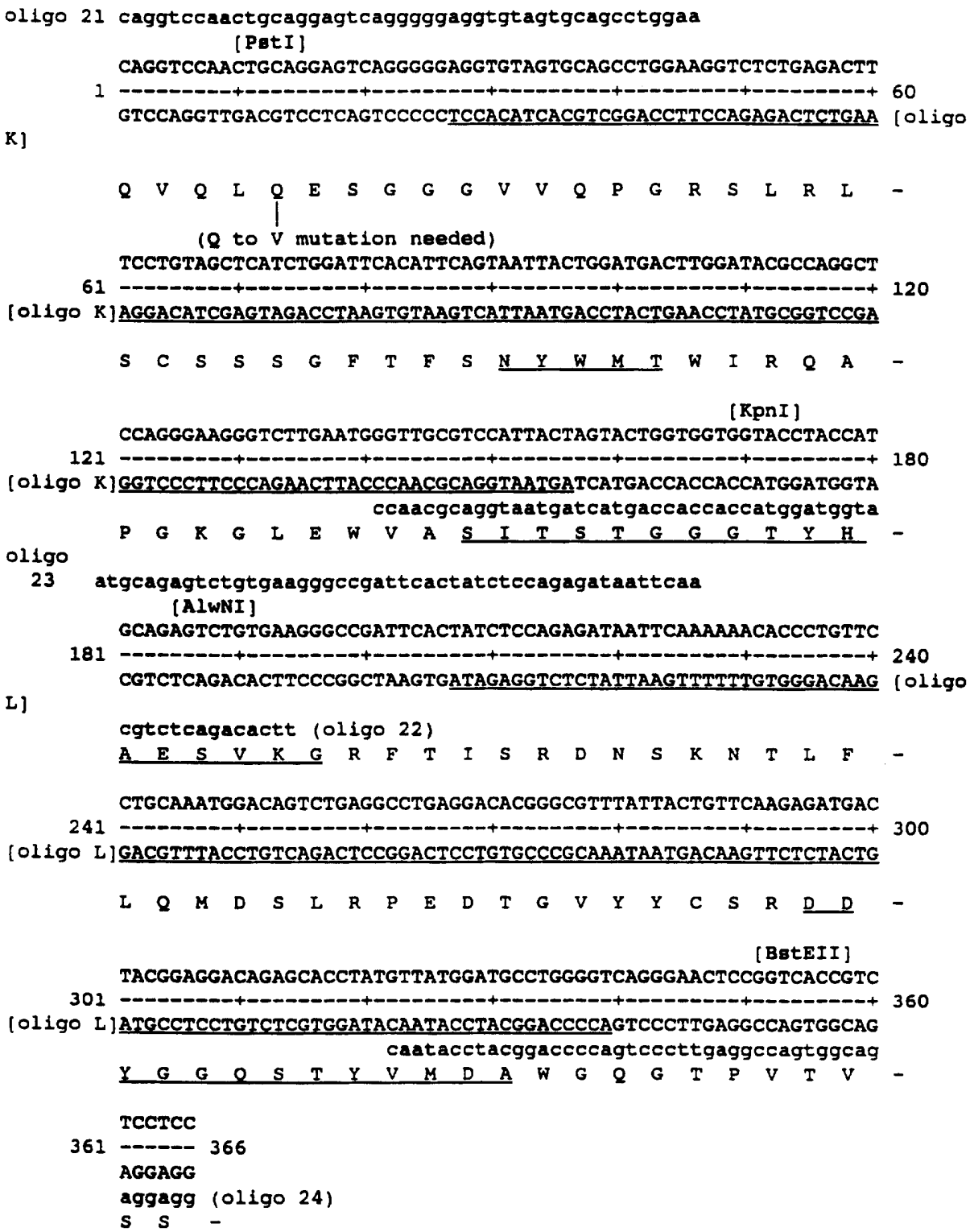
oligo 21 caggtccaactgcaggagtcaggggaggtgtagtgcagcctggaa
[PstI]
CAGGTCCAACTGCAGGAGTCAGGGGGAGGTGTAGTGCAGCCTGGAAGGTCTCTGAGACTT
1 ---------+---------+---------+---------+---------+---------+ 60
GTCCAGGTTGACGTCCTCAGTCCCCCTCCACATCACGTCGGACCTTCCAGAGACTCTGAA [oligo K]
Q V Q L Q E S G G G V V Q P G R S L R L -
(Q to V mutation needed)
TCCTGTAGCTCATCTGGATTCACATTCAGTAATTACTGGATGACTTGGATACGCCAGGCT
61 ---------+---------+---------+---------+---------+---------+ 120
[oligo K]AGGACATCGAGTAGACCTAAGTGTAAGTCATTAATGACCTACTGAACCTATGCGGTCCGA
S C S S S G F T F S N Y W M T W I R Q A -
[KpnI]
CCAGGGAAGGGTCTTGAATGGGTTGCGTCCATTACTAGTACTGGTGGTGGTACCTACCAT
121 ---------+---------+---------+---------+---------+---------+ 180
[oligo K]GGTCCCTTCCCAGAACTTACCCAACGCAGGTAATGATCATGACCACCACCATGGATGGTA
ccaacgcaggtaatgatcatgaccaccaccatggatggta
P G K G L E W V A S I T S T G G G T Y H -
oligo
23 atgcagagtctgtgaagggccgattcactatctccagagataattcaa
[AlwNI]
GCAGAGTCTGTGAAGGGCCGATTCACTATCTCCAGAGATAATTCAAAAAACACCCTGTTC
181 ---------+---------+---------+---------+---------+---------+ 240
CGTCTCAGACACTTCCCGGCTAAGTGATAGAGGTCTCTATTAAGTTTTTTGTGGGACAAG [oligo L]
cgtctcagacactt (oligo 22)
A E S V K G R F T I S R D N S K N T L F -
CTGCAAATGGACAGTCTGAGGCCTGAGGACACGGGCGTTTATTACTGTTCAAGAGATGAC
241 ---------+---------+---------+---------+---------+---------+ 300
[oligo L]GACGTTTACCTGTCAGACTCCGGACTCCTGTGCCCGCAAATAATGACAAGTTCTCTACTG
L Q M D S L R P E D T G V Y Y C S R D D -
[BstEII]
TACGGAGGACAGAGCACCTATGTTATGGATGCCTGGGGTCAGGGAACTCCGGTCACCGTC
301 ---------+---------+---------+---------+---------+---------+ 360
[oligo L]ATGCCTCCTGTCTCGTGGATACAATACCTACGGACCCCAGTCCCTTGAGGCCAGTGGCAG
caatacctacggaccccagtcccttgaggccagtggcag
Y G G Q S T Y V M D A W G Q G T P V T V -
TCCTCC
361 ------ 366
AGGAGG
aggagg (oligo 24)
S S -

FIG. 3

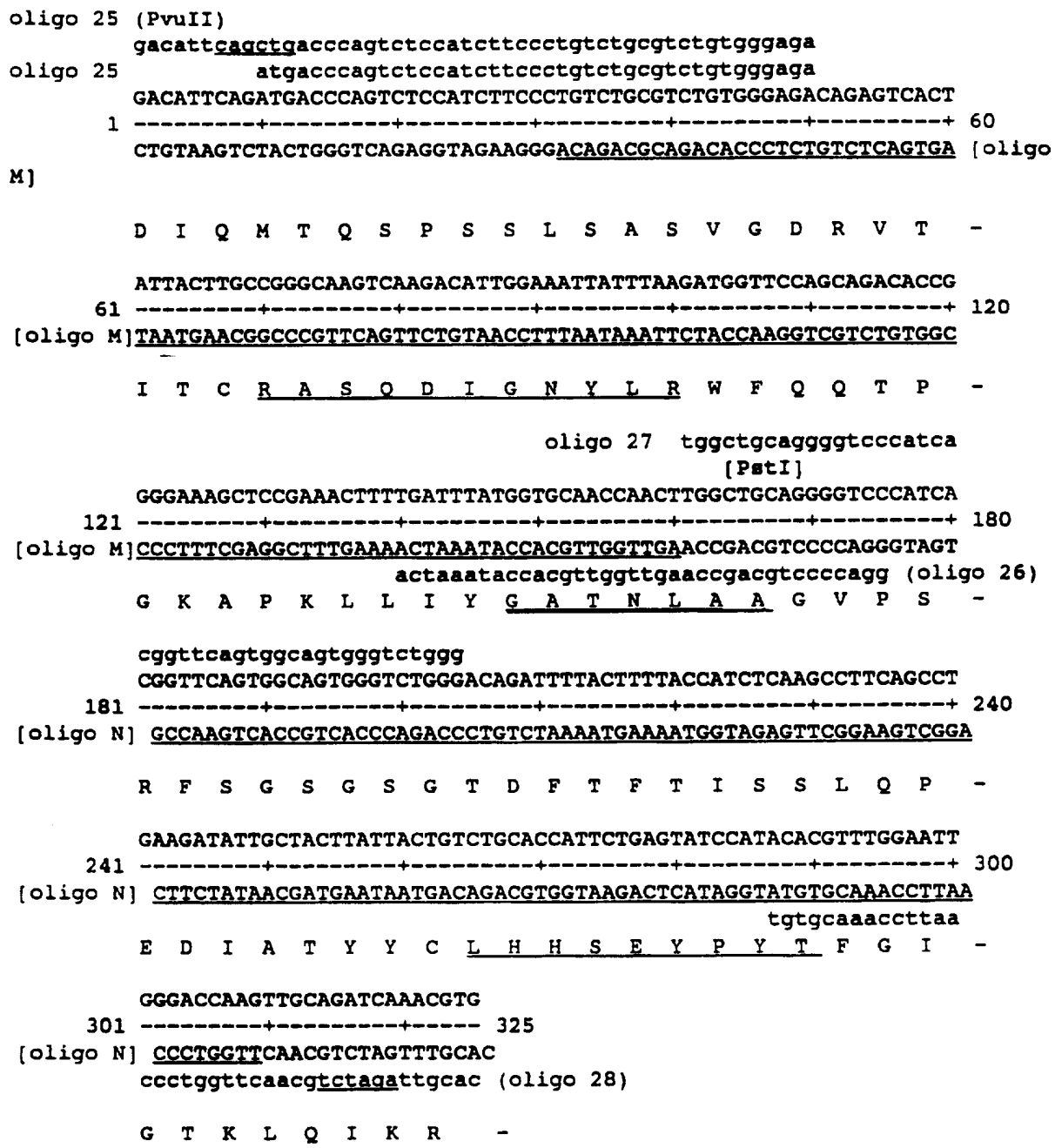
oligo 25 (PvuII)
gacattcagctgacccagtctccatcttccctgtctgcgtctgtgggaga
oligo 25 atgacccagtctccatcttccctgtctgcgtctgtgggaga
GACATTCAGATGACCCAGTCTCCATCTTCCCTGTCTGCGTCTGTGGGAGACAGAGTCACT
1 ---------+---------+---------+---------+---------+---------+ 60
CTGTAAGTCTACTGGGTCAGAGGTAGAAGGGACAGACGCAGACACCCTCTGTCTCAGTGA [oligo M]
D I Q M T Q S P S S L S A S V G D R V T -
ATTACTTGCCGGGCAAGTCAAGACATTGGAAATTATTTAAGATGGTTCCAGCAGACACCG
61 ---------+---------+---------+---------+---------+---------+ 120
[oligo M]TAATGAACGGCCCGTTCAGTTCTGTAACCTTTAATAAATTCTACCAAGGTCGTCTGTGGC
I T C R A S Q D I G N Y L R W F Q Q T P -
oligo 27 tggctgcaggggtcccatca
[PstI]
GGGAAAGCTCCGAAACTTTTGATTTATGGTGCAACCAACTTGGCTGCAGGGGTCCCATCA
121 ---------+---------+---------+---------+---------+---------+ 180
[oligo M]CCCTTTCGAGGCTTTGAAAACTAAATACCACGTTGGTTGAACCGACGTCCCCAGGGTAGT
actaaataccacgttggttgaaccgacgtccccagg (oligo 26)
G K A P K L L I Y G A T N L A A G V P S -
cggttcagtggcagtgggtctggg
CGGTTCAGTGGCAGTGGGTCTGGGACAGATTTTACTTTTACCATCTCAAGCCTTCAGCCT
181 ---------+---------+---------+---------+---------+---------+ 240
[oligo N] GCCAAGTCACCGTCACCCAGACCCTGTCTAAAATGAAAATGGTAGAGTTCGGAAGTCGGA
R F S G S G S G T D F T F T I S S L Q P -
GAAGATATTGCTACTTATTACTGTCTGCACCATTCTGAGTATCCATACACGTTTGGAATT
241 ---------+---------+---------+---------+---------+---------+ 300
[oligo N] CTTCTATAACGATGAATAATGACAGACGTGGTAAGACTCATAGGTATGTGCAAACCTTAA
tgtgcaaaccttaa
E D I A T Y Y C L H H S E Y P Y T F G I -
GGGACCAAGTTGCAGATCAAACGTG
301 ---------+---------+----- 325
[oligo N] CCCTGGTTCAACGTCTAGTTTGCAC
ccctggttcaacgtctagattgcac (oligo 28)
G T K L Q I K R -

FIG. 4

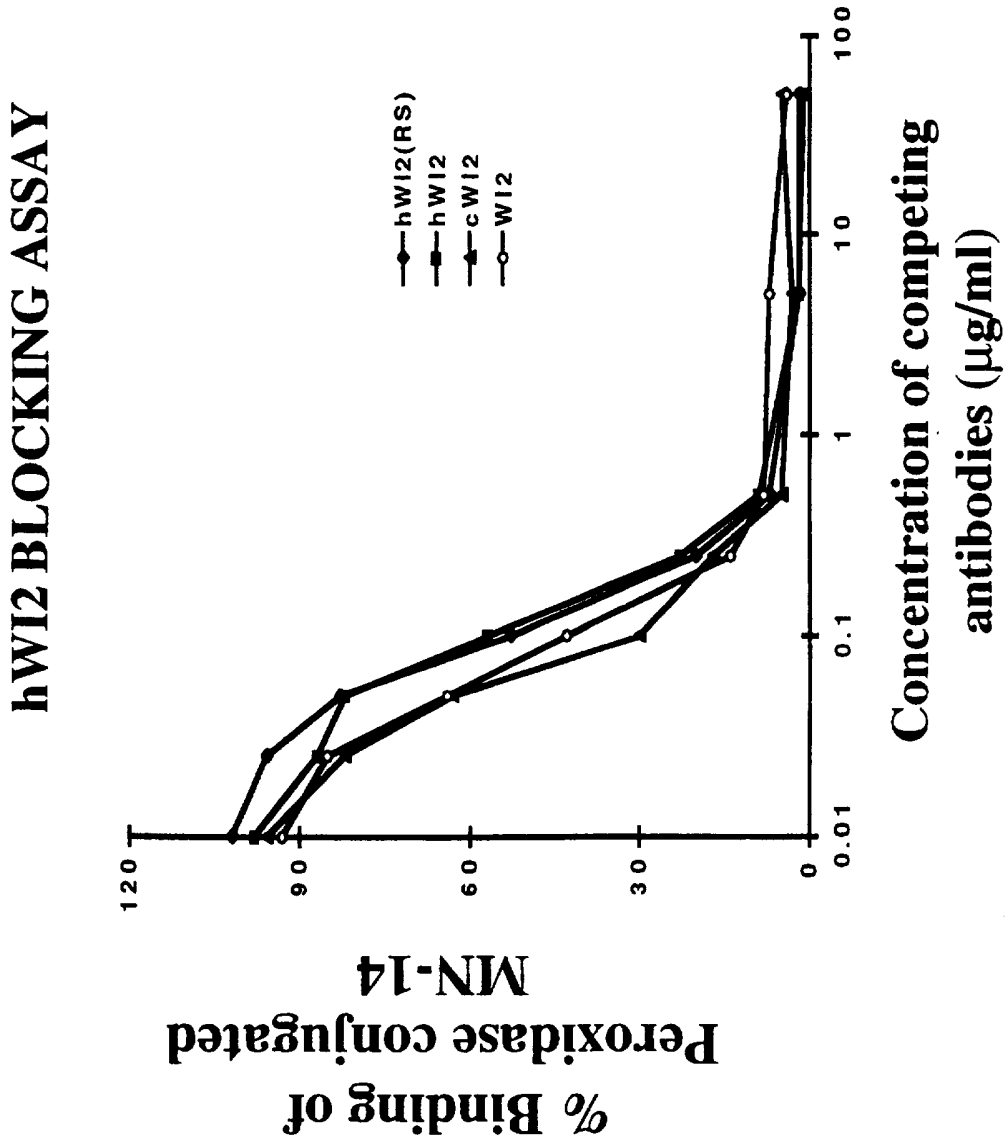
hWI2 BLOCKING ASSAY
hWI2(RS)
hWI2
cWI2
WI2
% Binding of Peroxidase conjugated MN-14
120
90
60
30
0
0.01
0.1
1
10
100
Concentration of competing antibodies (µg/ml)

FIG. 5

```
GACATTCAGC TGACCCAGTC TCCAGCTTCC CTGCCTGCGT CTCTGGGAGA          50
CTGTAAGTCG ACTGGGTCAG AGGTCGAAGG GACGGACGCA GAGACCCTCT
D  I  Q  L   T  Q  S   P  A  S   L  P  A  S   L G D

CAGAGTCACT ATTACTTGCC GGGCAAGTCA AGACATTGGA AATTATTTAA          100
GTCTCAGTGA TAATGAACGG CCCGTTCAGT TCTGTAACCT TTAATAAATT
 R  V  T   I  T  C  R  A  S  Q   D  I  G   N  Y  L  R
                                  CDR1

GATGGTTCCA GCAGAAACCG GGGAAATCTC CGAGGCTTTT GATTTATGGT          150
CTACCAAGGT CGTCTTTGGC CCCTTTAGAG GCTCCGAAAA CTAAATACCA
  W  F  Q   Q  K  P   G  K  S  P   R  L  L   I  Y  G

GCAACCAACT TGGCAGCTGG GGTCCCATCA CGGITCAGTC GCAGTAGGTC          200
CGTTGGTTGA ACCGTCGACC CCAGGGTAGT GCCAAGTCAC CGTCATCCAG
A  T  N  L   A  A  G   V  P  S   R  F  S  G   S  R  S
   CDR2

TGGGTCAGAT TTTTCTCTGA CCATCAACAG CCTGGAGTCT GAAGATATGG          250
ACCCAGTCTA AAAAGAGACT GGTAGTTGTC GGACCTCAGA CTTCTATACC
 G  S  D   F  S  L  T   I  N  S   L  E  S   E  D  M  A

CTATTTATTA CTGTCTGCAC CATTCTGAGT ATCCATACAC GTTTGGAATT          300
GATAAATAAT GACAGACGTG GTAAGACTCA TAGGTATGTC CAAACCTAA
  I  Y  Y   C  L  H   H  S  E  Y   P  Y  T   F  G  I
                  CDR3

GGGACCAAGC TGGAACGGAA ACGG                                      324
CCCTGGTTCG ACCTTGCCTT TGCC
G  T  K  L   E  R  K   R
```

FIGURE 6

```
CAGGTCCAAC TGCAGGAGTC AGGGGGAGAT CTAGTGCAGC CTGGAAGGTC          50
GTCCAGGTTG ACGTCCTCAG TCCCCCTCTA GATCACGTCG GACCTTCCAG
Q  V  Q  L   Q  E  S   G  G  D   L  V  Q  P   G  R  S

TCTGAAACTT TCCTGTGTAG CCTCTGGATT CACATTCAGT AATTACTGGA          100
AGACTTTGAA AGGACACATC GGAGACCTAA GTGTAAGTCA TTAATGACCT
 L  K  L   S  C  V  A   S  G  F   T  F  S   N  Y  W  M
                                                 CDR1

TGACTTGGAT CCGCCAGGCT CCAGGGGAGG GTCTTGAATG GGTTGCGTCC          150
ACTGAACCTA GGCGGTCCGA GGTCCCCTCC CAGAACTTAC CCAACGCAGG
  T  W  I   R  Q  A   P  G  E  G   L  E  W   V  A  S

ATTACTAGTA CTGGTGGTGG GACTTACCAT GCAGAGTCTG TGAAGGGCCG          200
TAATGATCAT GACCACCACC CTGAATGGTA CGTCTCAGAC ACTTCCCGGC
I  T  S  T   G  G  G   T  Y  H   A  E  S  V   K  G  R
                        CDR2

ATTCACTATC TCCAGAGATA ATTCAAAAAG CACCCTGTAC CTGCAAATGA          250
TAAGTGATAG AGGTCTCTAT TAAGTTTTTC GTGGGACATG GACGTTTACT
 F  T  I   S  R  D  N   S  K  S   T  L  Y   L  Q  M  N

ACAGTCTGAG GCCTGAGGAC ACGGCCACTT ATTACTGTTC AAGAGATAGAC         300
TGTCAGACTC OGGACTCCTG TGCCGGTGAA TAATGACAAG TTCTCTACTG
  S  L  R   P  E  D   T  A  T  Y   Y  C  S   R  D  D

TACGGAGGAC AGAGCACCTA TGTTATGGAT GCCTGGGGTC AGGGATCTTC          350
ATGCCTCCTG TCTOGTGGAT ACAATACCTA CGGACCCCAG TCCCTAGAAG
Y  G  G  Q   S  T  Y   V  M  D   A  W  G  Q   G  S  S
                CDR3

GGTCACCGTC TCCTCA                                               376
CCAGTGGCAG AGGGGT
 V  T  V   S  S
```

FIGURE 7

INTERNATIONAL SEARCH REPORT

International application No.
PCT/US97/04696

A. CLASSIFICATION OF SUBJECT MATTER

IPC(6) :Please See Extra Sheet.
US CL : 424/159.1; 530/388.3, 395; 435/252.33, 7.9; 536/23.53
According to International Patent Classification (IPC) or to both national classification and IPC

B. FIELDS SEARCHED

Minimum documentation searched (classification system followed by classification symbols)

U.S. : 424/159.1; 530/388.3, 395; 435/252.33, 7.9; 536/23.53

Documentation searched other than minimum documentation to the extent that such documents are included in the fields searched

Electronic data base consulted during the international search (name of data base and, where practicable, search terms used)

Please See Extra Sheet.

C. DOCUMENTS CONSIDERED TO BE RELEVANT

Category*	Citation of document, with indication, where appropriate, of the relevant passages	Relevant to claim No.
Y	IRVINE et al. Induction of Delayed-Type Hypersensitivity Responses by Monoclonal Antiidiotypic Antibodies to Tumor Cells Expressing Carcinoembryonic Antigen and Tumor Associated Glycoprotein-72. Cancer Immunology Immunotherapy. May 1993, Vol. 36, No. 5, pages 281-292, whole article.	15-16, 19
Y	PIMM et al. Determination of the Immunoreactivity of Radiolabelled Monoclonal Antibody Fragments by binding to Immobilized Antiidiotypic Antibodies. Life Sciences. 1995. Vol. 56, No. 17, pages 1401-1406, whole article.	16-18

[X] Further documents are listed in the continuation of Box C. [ ] See patent family annex.

*	Special categories of cited documents:	"T"	later document published after the international filing date or priority date and not in conflict with the application but cited to understand the principle or theory underlying the invention
"A"	document defining the general state of the art which is not considered to be of particular relevance	"X"	document of particular relevance; the claimed invention cannot be considered novel or cannot be considered to involve an inventive step when the document is taken alone
"E"	earlier document published on or after the international filing date	"Y"	document of particular relevance; the claimed invention cannot be considered to involve an inventive step when the document is combined with one or more other such documents, such combination being obvious to a person skilled in the art
"L"	document which may throw doubts on priority claim(s) or which is cited to establish the publication date of another citation or other special reason (as specified)	"&"	document member of the same patent family
"O"	document referring to an oral disclosure, use, exhibition or other means		
"P"	document published prior to the international filing date but later than the priority date claimed		

Date of the actual completion of the international search 15 MAY 1997	Date of mailing of the international search report 11 JUL 1997
Name and mailing address of the ISA/US Commissioner of Patents and Trademarks Box PCT Washington, D.C. 20231 Facsimile No. (703) 305-3230	Authorized officer GEETHA P. BANSAL Telephone No. (703) 308-0196

Form PCT/ISA/210 (second sheet)(July 1992)*

INTERNATIONAL SEARCH REPORT

International application No.
PCT/US97/04696

C (Continuation). DOCUMENTS CONSIDERED TO BE RELEVANT

Category*	Citation of document, with indication, where appropriate, of the relevant passages	Relevant to claim No.
Y	GAIDA et al. A Monoclonal Antiidiotypic Antibody Bearing the Image of an Epitope Specific to the Carcinoembryonic Antigen. International Journal of Cancer. 28 May 1992. Vol 51, No. 3, pages 459-465, whole article.	1
Y	Morrison. Genetically Engineered (Chimeric) Antibodies. Hospital Practice. 15 October 1989, pages 65-69, 72-74, 77-78, 80, see entire document.	1

INTERNATIONAL SEARCH REPORT

International application No.
PCT/US97/04696

Box I Observations where certain claims were found unsearchable (Continuation of item 1 of first sheet)

This international report has not been established in respect of certain claims under Article 17(2)(a) for the following reasons:

1. ☐ Claims Nos.:
because they relate to subject matter not required to be searched by this Authority, namely:

2. ☒ Claims Nos.: 2-14
because they relate to parts of the international application that do not comply with the prescribed requirements to such an extent that no meaningful international search can be carried out, specifically:

The claims recited sequences for which a CRF or a paper copy was not submitted.

3. ☐ Claims Nos.:
because they are dependent claims and are not drafted in accordance with the second and third sentences of Rule 6.4(a).

Box II Observations where unity of invention is lacking (Continuation of item 2 of first sheet)

This International Searching Authority found multiple inventions in this international application, as follows:

Please See Extra Sheet.

1. ☒ As all required additional search fees were timely paid by the applicant, this international search report covers all searchable claims.

2. ☐ As all searchable claims could be searched without effort justifying an additional fee, this Authority did not invite payment of any additional fee.

3. ☐ As only some of the required additional search fees were timely paid by the applicant, this international search report covers only those claims for which fees were paid, specifically claims Nos.:

4. ☐ No required additional search fees were timely paid by the applicant. Consequently, this international search report is restricted to the invention first mentioned in the claims; it is covered by claims Nos.:

Remark on Protest

☐ The additional search fees were accompanied by the applicant's protest.

☐ No protest accompanied the payment of additional search fees.

INTERNATIONAL SEARCH REPORT

International application No.
PCT/US97/04696

A. CLASSIFICATION OF SUBJECT MATTER:
IPC (6):

A61K 39/42; C12N 1/20; C12P 21/08; C07H 21/04; C07K 1/00, 16/00; G01N 33/53, 33/542

B. FIELDS SEARCHED
Electronic data bases consulted (Name of data base and where practicable terms used):

Medline, Biosis, Cancerlit, Sciscarch
search terms: antiidiotypic antibodies, Carcinoembronic antigen, cancer treatment or therapy, diagnosis using antiidiotypic antibodies for CEA

BOX II. OBSERVATIONS WHERE UNITY OF INVENTION WAS LACKING
This ISA found multiple inventions as follows:

Group I, claim(s)1-2, 5-8, 15-16, 18-19, drawn to an antiidiotypic antibody and vaccine composition thereof.
Group II, claim(s) 3-4, 9-14, drawn to nucleic acid and expression vector thereof.
Group III, claim 17, drawn to a method of detection of an antibody.
The inventions listed as Groups I-III do not relate to a single inventive concept under PCT Rule 13.1 because, under PCT Rule 13.2, they lack the same or corresponding special technical features for the following reasons:
The technical feature linking groups I-III appear to be that they all relate to an antiidiotypic antibody, nucleic acid encoding antibodies and methods to use the antiidiotypic antibody in diagnosis and treatment of cancers.
However, antiidiotypic antibodies for diagnosis and therapy are well known in the prior art and can be used to purify idiotypic antibodies that may have relevant functions in treatment of cancer. Therefore, the technical feature of the linking groups I-III does not constitute a special technical feature as defined by PCT Rule 13.2, as it does not define a contribution over prior art.

The special technical feature of Group I is drawn to a protein/antibody product, and a method of using the antibody product in diagnosing and treating cancers.

The special technical feature of Group II claims are drawn to the nucleic acids and expression vector.

The special technical feature of Group III claims is drawn to a detection method.

Accordingly, Groups I-III are not so linked by the same or a corresponding special technical feature as to form a single general inventive concept.