Oct. 1, 1935. H. E. ELROD 2,016,082

REFRIGERATING UNIT

Filed March 14, 1930 5 Sheets-Sheet 1

Fig. 1.

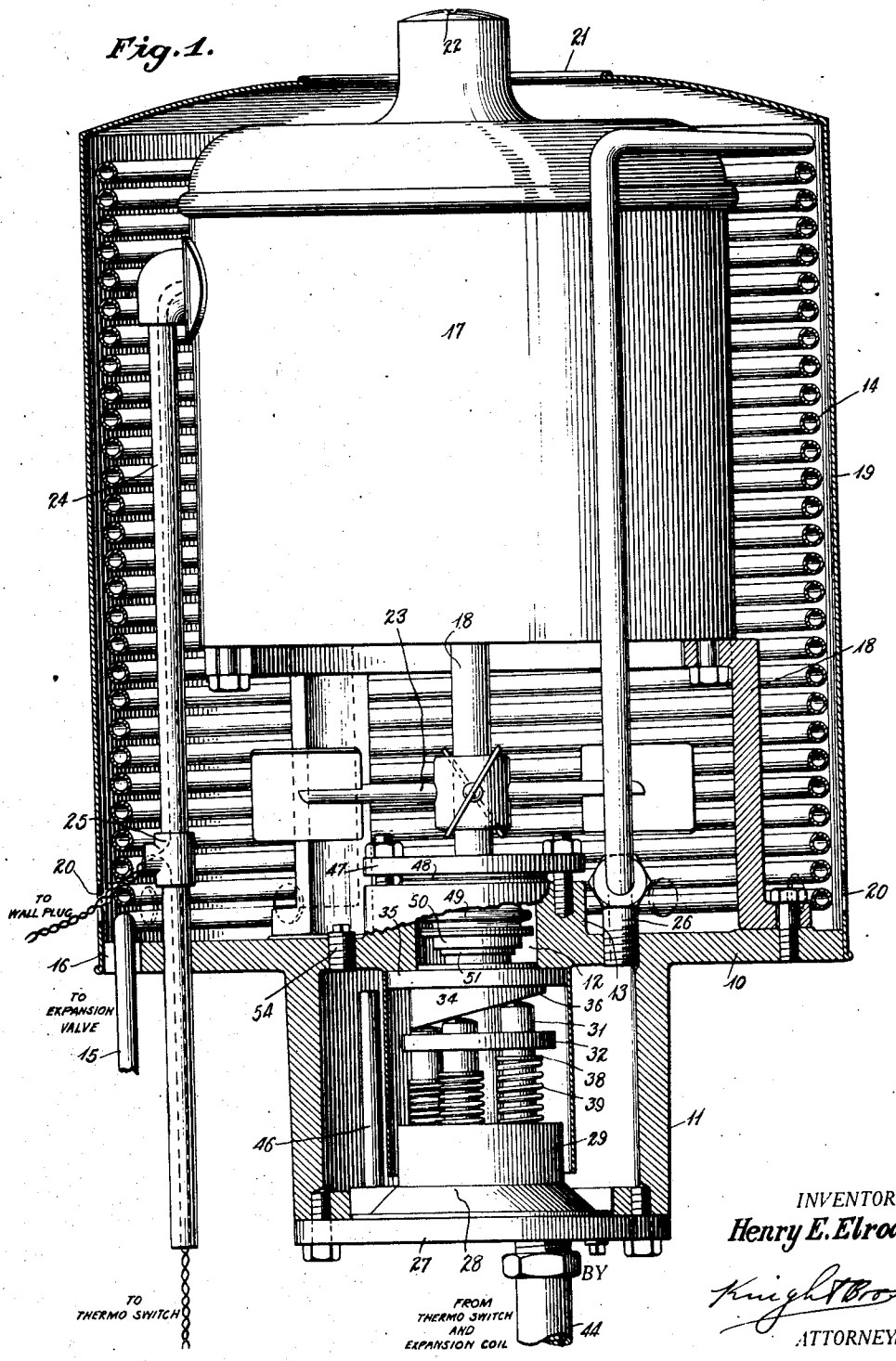

INVENTOR.
Henry E. Elrod
Knight Bros
ATTORNEYS

Oct. 1, 1935. H. E. ELROD 2,016,082

REFRIGERATING UNIT

Filed March 14, 1930 5 Sheets-Sheet 2

Fig. 2.

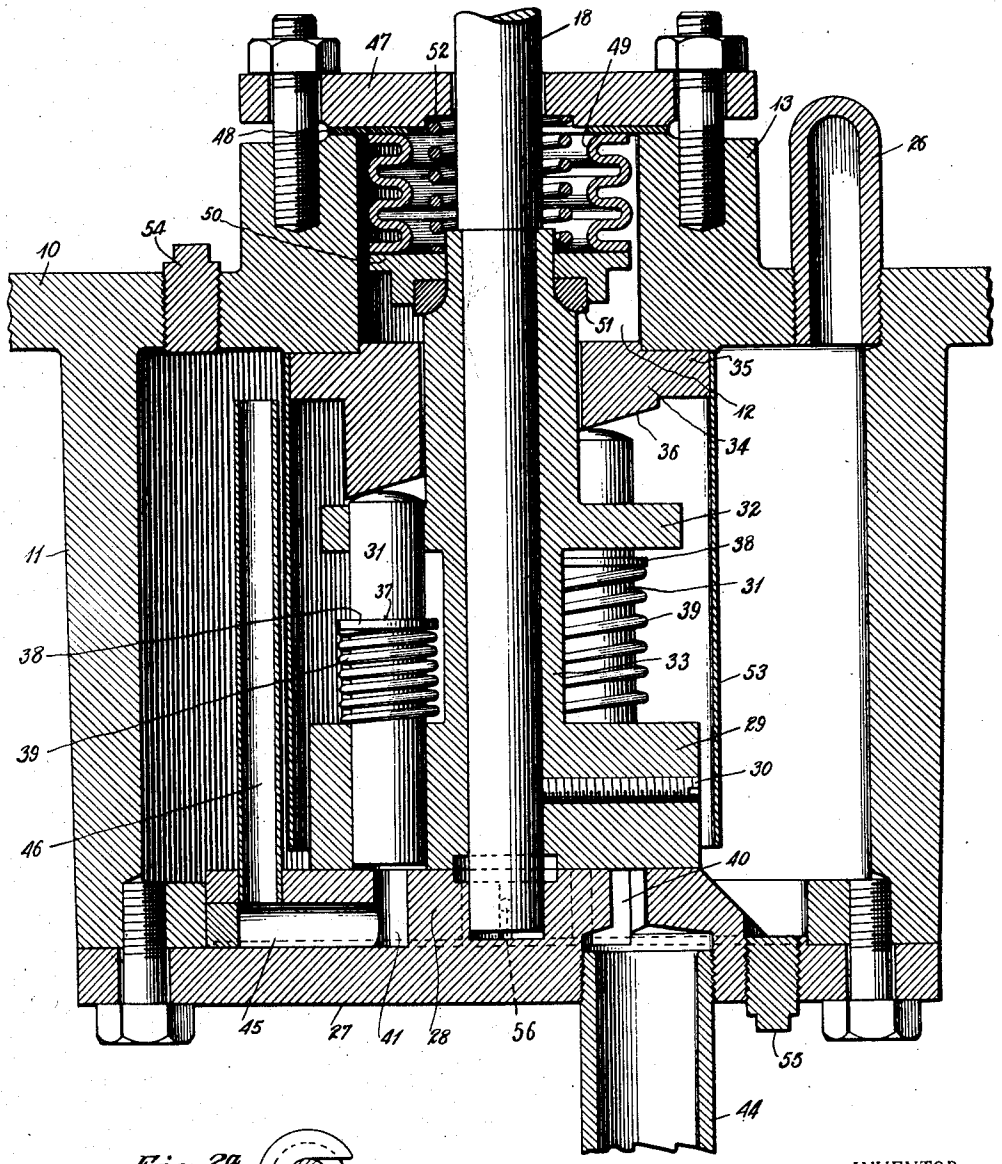

Fig. 2a

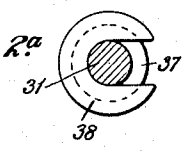

INVENTOR.
Henry E. Elrod

BY Knight Bros

ATTORNEYS

Oct. 1, 1935. H. E. ELROD 2,016,082

REFRIGERATING UNIT

Filed March 14, 1930 5 Sheets-Sheet 3

Fig. 3.

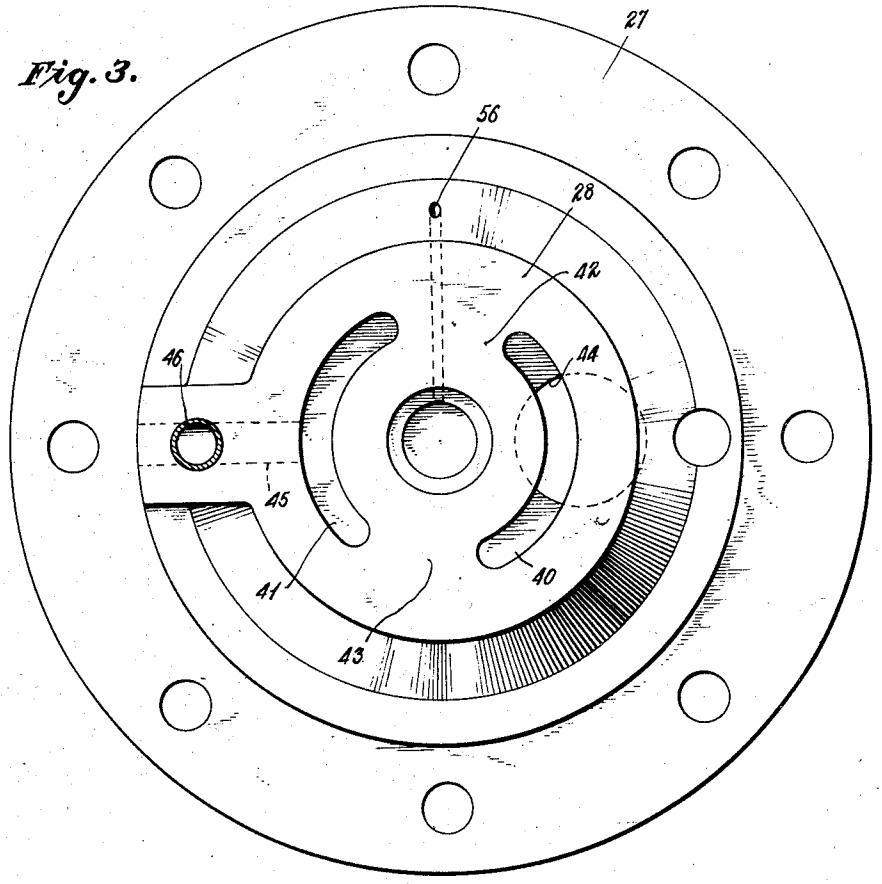

Fig. 4.

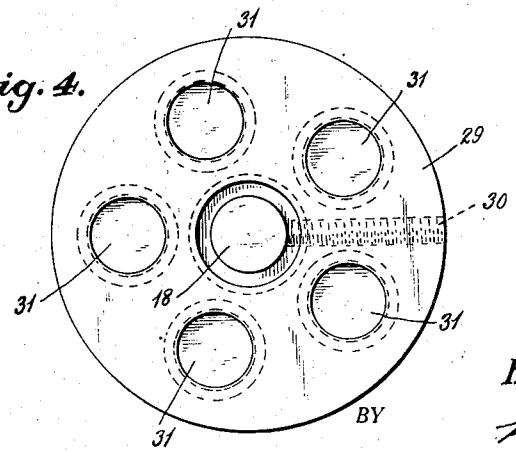

INVENTOR.
Henry E. Elrod
BY
Knight Bros
ATTORNEYS

Oct. 1, 1935. H. E. ELROD 2,016,082

REFRIGERATING UNIT

Filed March 14, 1930 5 Sheets-Sheet 4

Fig. 5.

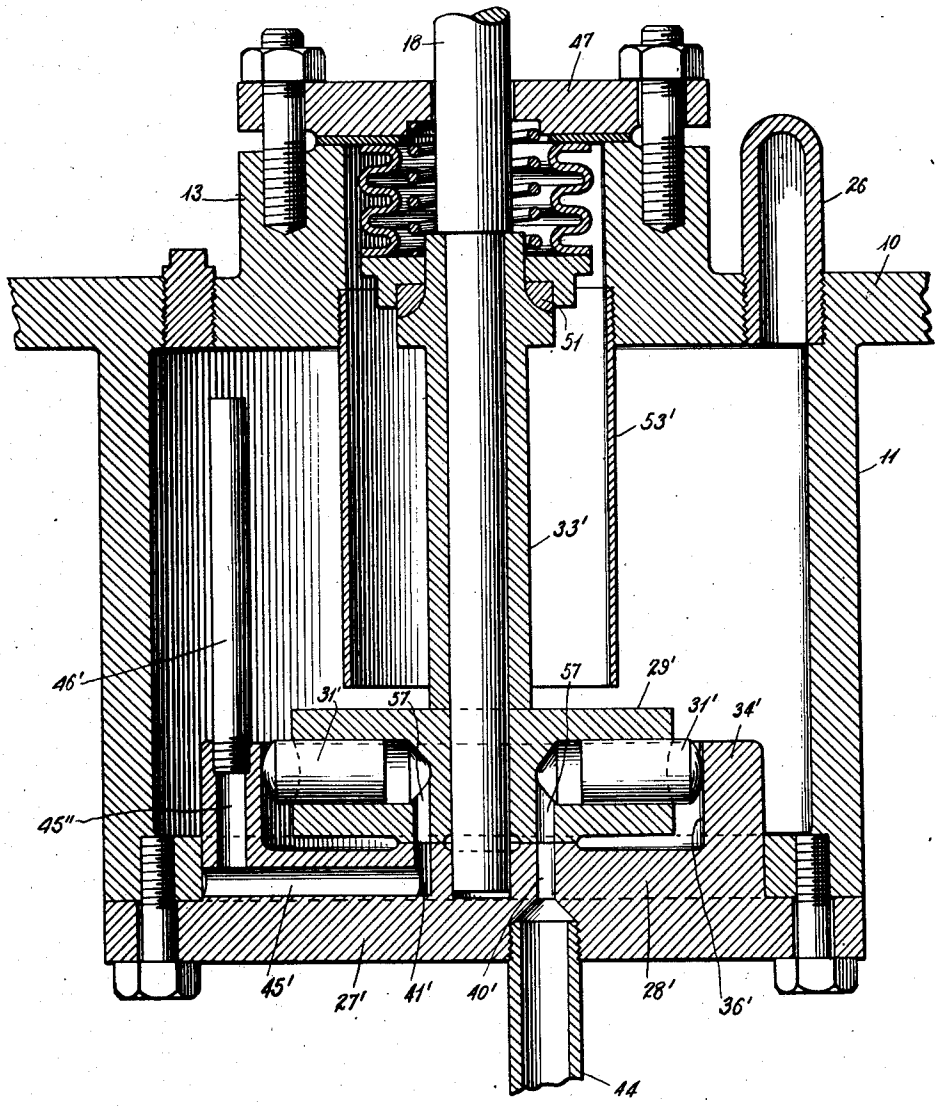

Inventor
Henry E. Elrod

By

Attorneys

Oct. 1, 1935. H. E. ELROD 2,016,082

REFRIGERATING UNIT

Filed March 14, 1930 5 Sheets-Sheet 5

Fig. 6.

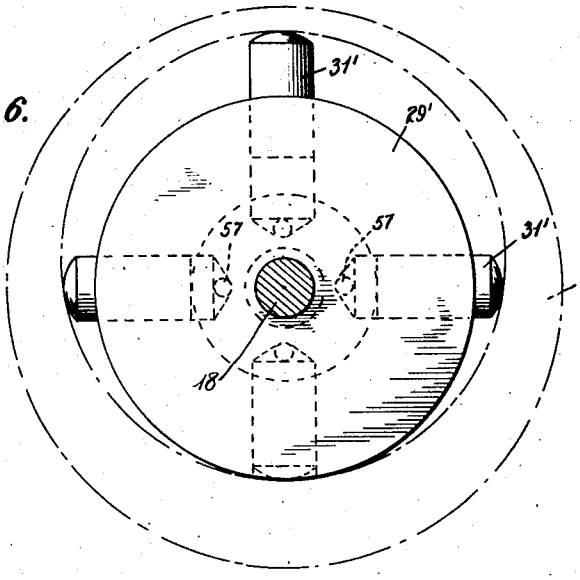

Fig. 7.

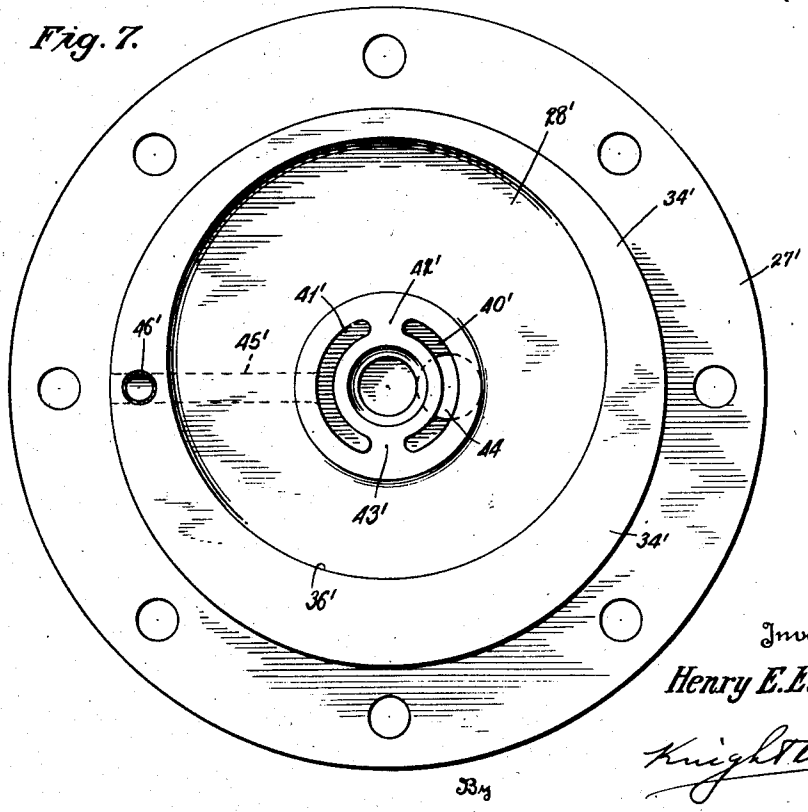

Inventor
Henry E. Elrod
By Knight Bros
Attorneys

Patented Oct. 1, 1935 2,016,082

UNITED STATES PATENT OFFICE

2,016,082

REFRIGERATING UNIT

Henry E. Elrod, San Benito, Tex.

Application March 14, 1930, Serial No. 435,889

6 Claims. (Cl. 230—207)

The present invention relates to a condenser unit comprising, essentially, a motor, a compressor, a coil, a fan, and a heat-radiating enclosing hood for the coil, motor, and fan. The unit is so designed that although it may be built into a refrigerating box at the factory, it may be equally well applied to an ordinary ice box to convert the same into a mechanical refrigerator.

According to the embodiment of the invention to be described hereinafter, the motor is mounted within the coil in coaxial relation thereto and the fan and compressor, which latter is preferably of the rotary type, are coaxial with the motor. The elements are all supported by a base plate, the motor and fan being disposed at one side of the plate and the compressor at the other side in a housing preferably integral with the plate. A hood of heat-radiating material surrounds the coil in proximity thereto and has air openings through which air is drawn and expelled by the fan, the air in its passages through the hood passing along the coil to cool the same. The hood radiates outwardly heat transmitted thereto from the coil and also serves to protect the mechanism enclosed by it. It offers a further advantage, as over an exposed coil, in that dust and dirt do not readily gather on it and it may be easily cleaned.

As I have stated, a rotary compressor most effectively enters into the combination, and the invention includes such a compressor of simplified and compact form, as well as a lubricating system therefor.

In the accompanying drawings, illustrative of the invention,

Fig. 1 is an axial section through the unit, parts being shown in elevation,

Fig. 2 is an enlarged axial section through the rotary compressor shown in Fig. 1,

Fig. 2a is a trans-axial section through a compressor piston,

Fig. 3 is a plan view of a valve plate forming a part of the compressor,

Fig. 4 is a bottom plan view of a cylinder block forming a part of the compressor,

Fig. 5 is an axial section through a second and preferred form of compressor,

Fig. 6 is a plan view of a cylinder block forming a part of the compressor of Fig. 5, and

Fig. 7 is a plan view of a cam and valve plate forming a part of the compressor of Fig. 5.

In Fig. 1, reference numeral 10 designates a circular horizontal base plate having centrally thereof a cylindrical depending integral skirt 11. Plate 10 is provided with a central circular aperture 12 surrounded by an up-standing collar 13. A condensing coil 14 rests on the upper margins of plate 10 with its axis perpendicular to the plate. The coil outlet 15 to an expansion valve, not shown, passes downwardly through a peripheral recess 16 of plate 10.

An electric motor 17 is mounted on a tripod 18, whose legs are secured to plate 10, coaxially with coil 14 and with its armature shaft 18 passing downwardly through and centrally of aperture 12. A substantially bell-shaped hood 19 of heat radiating material surrounds the coil and motor with its lower margins resting against the periphery of plate 10, and, if desired, removably secured thereto.

Near its lower edge hood 19 is provided with a number of air holes 20, while at its top it is provided with a central air escape aperture 21 through which the upper armature shaft bearing of the motor projects for convenient oiling through duct 22.

Mounted on armature shaft 18 beneath the motor is a fan 23, here shown as comprising four blades, adapted, upon armature rotation, to draw air into the hood through holes 20, circulate it upwardly along the coil, and expel it from the hood through aperture 21.

A conduit 24 for the electrical conductors to the motor and to a thermo switch (not shown) is secured to the motor casing and extends downwardly through an aperture in plate 10. The conductors may be led to the conduit 24 through a hole 20 of hood 19 and a T coupling 25 interposed in the conduit.

To install the condenser unit in an ice refrigerator, it will be evident that it will only be necessary to cut holes in the top of the box above the ice compartment to receive pipe 15, conduit 24, and skirt 11, plate 10 then being adapted to rest directly on the top of the box.

The inlet end of coil 14, through a connection 26, is in communication with the interior of skirt 11.

Referring now to Figs. 2, 3 and 4, skirt 11 is closed at its lower end by means of a circular plate 27 having a flat-topped, raised portion 28 extending upwardly within the skirt. Portion 28 is centrally bored to receive the lower end of shaft 18. Fixed to shaft 18 immediately above portion 28, and having a lower flat face resting upon the face of the latter, is a cylindrical block 29 fixed in position by means of a set screw 30. Block 29 is provided with a number of bores parallel to shaft 18 and with their axes defining

a circle concentric with the shaft. In these bores are slidable pistons 31 whose upper ends are guided in a flange 32 of an upwardly extending sleeve 33 integral, as here shown, with block 29. A cam ring 34 is secured by means of a flange 35 to the lower margins of aperture 12 and has an axially projecting cam face 36 opposed to and in the circle of pistons 31.

Intermediate block 29 and flange 32 pistons 31 are provided with annular grooves, as at 37, Fig. 2a, in which are engaged spring staples 38. Interposed between staples or abutments 38 and block 29 are compression springs 39 which yieldingly urge the upper chamfered extremities of pistons 31 against cam face 36. Upon rotation of block 29 pistons 31 will be reciprocated by the cam and springs.

Beneath the rotary path of the pistons portion 28 of plate 27 is provided with arcuate grooves 40 and 41, separated by lands 42 and 43. Groove 40 is in communication with pipe 44 leading from an expansion coil, not shown, while groove 41, by means of a duct 45, is in communication with a stand pipe 46 whose upper end terminates below and short of plate 10. The upwardly moving pistons 31, or those following the cam face, are above groove 40 and draw the refrigerant into their cylinders. The downwardly moving pistons, that is, those following the cam rise, are above groove 41 and expel the refrigerant under compressive force through the groove, duct 45, and stand pipe 46 into the top of the chamber defined by skirt 11. At the high and low points of the cam the pistons are over the lands.

A ring 47 is secured to the upper edge of collar 13 and interposed between the collar and ring is a gasket 48 having welded to its lower face a sylphon gland 49. To the lower extremity of the sylphon gland is welded a ring 50 having a lower seat receiving a packing ring 51. Ring 51 is pressed against a shoulder of sleeve 33 by a compression spring 52 interposed between rings 47 and 50. Thus an air-tight joint is provided between the upper and lower sides of plate 10.

A sleeve 53, secured at its upper end to flange 35, extends downwardly to within a short distance of portion 28, surrounding the rotary parts of the compressor. This sleeve defines a chamber which is sealed at the bottom thereof by the body of oil upon the exterior of the sleeve which has imposed above its surface the compressor pressure. The body of oil upon the interior of the sleeve continually surrounds the moving elements requiring lubrication and furthermore extends to a level above that normally assumed by the oil in the skirt 11, as explained in the following paragraph.

Initially, ring 47 is loosened and lubricant is introduced through an aperture normally closed by a plug 54, into the chamber defined by skirt 11 until its level is shortly below the top of stand pipe 46. The lubricant thus introduced flows under and upwardly in sleeve 53 until it reaches its level. Plug 54 is replaced and the compressor operated until the pressure exerted on top of the lubricant body intermediate skirt 11 and sleeve 53 causes the lubricant to show under ring 47, whereupon the latter is tightened in place.

Due to the described arrangement it will be seen that the compressor rotor works in a body of lubricant which is under the compressor pressure and thus necessarily reaches all moving parts. The lubricant bath renders the compressor noiseless in operation and assures perfect lubrication of its parts. The lubricant need be replenished only at long intervals, and if desired it may be drained out upon removal of a plug 55. A duct 56 gives the lubricant ready access to the bottom bearing of shaft 18.

In Figs. 5 to 7 the parts identical with those already described have been given the same reference numerals.

Referring to these figures, skirt 11 is closed by a plate 27' having a raised portion 28' provided with a central bore receiving the lower end of shaft 18. Portion 28' is bounded laterally by an upstanding flange ring 34' whose outer wall is concentric with shaft 18 but whose inner wall is eccentric thereto. Block 29' is provided with radial bores in which pistons 31' are slidable, the inner ends of the bores being adapted to communicate by means of axially extending ducts 57 with arcuate grooves 40' and 41' formed in portion 28' and separated by lands 42' and 43'. Groove 40' is in communication with pipe 44 while groove 41', through ducts 45' and 45'', is in communication with stand pipe 46'. A sleeve 33' resting on block 29' and surrounding shaft 18 has a shoulder at its upper end for cooperation with the packing instrumentalities already described. Sleeve 53' is threaded at its upper end into collar 13. It will be understood the lubricating arrangements are the same as those described above.

Upon rotation of block 29' pistons 31' will be urged against the opposed cam face 36' by centrifugal force and by a certain amount of back pressure existing at their inner ends to draw the refrigerant through port 40' into the cylinders. As the pistons are forced inwardly due to the cam rise, the refrigerant will be compressed and expelled through port 41'. It is believed that the operation will be perfectly clear from the preceding description of the compressor of Figs. 1 to 4, the great advantage of this second form of course being that springs such as 39 (Fig. 1) are entirely eliminated.

Having thus described by invention, I claim:

1. The combination with a compressor, of an enclosed chamber in which said compressor is disposed, a vertically disposed actuating shaft and associated mechanisms for said compressor, an electric motor outside of said enclosed chamber for driving said actuating shaft, a sleeve having a substantial diameter defining an auxiliary compartment surrounding said shaft and mechanisms and communicating with said chamber at the lower end thereof, means for tightly packing said shaft in said compartment, said chamber being partially filled with a body of lubricant, means for establishing the compressor pressure above the lubricant body, said body of lubricant furthermore cooperating with said auxiliary compartment to continually maintain said compartment filled with lubricant.

2. The combination with a compressor, of an enclosed chamber in which said compressor is disposed, a vertically disposed actuating shaft and associated mechanisms for said compressor, an electric motor outside of said enclosed chamber for driving said actuating shaft, an open-ended sleeve defining an auxiliary compartment surrounding said shaft and mechanisms and opening into said chamber at the lower end thereof, means for tightly packing said shaft in said compartment, said chamber being partially filled with a body of lubricant, an outlet for said compressor discharging into the chamber above the lubricant body, a chamber outlet above said lubricant body, said lubricant body furthermore form-

ing a seal for the passage between said compartment and said chamber to maintain the lubricant in said compartment at a high level independent of said outlets.

3. The combination with a compressor, of an enclosed chamber in which said compressor is disposed, a vertically disposed actuating shaft and associated mechanisms for said compressor, an open-ended sleeve, partially defining an auxiliary compartment opening into said chamber at the lower end thereof, surrounding said shaft and mechanisms, a cover for said compartment, a packing member for said shaft near the top of said compartment, a yielding tight gland surrounding said shaft intermediate said cover and said packing member, said chamber being partially filled with a body of lubricant, means for establishing the compressor pressure above the lubricant body to raise the level of the lubricant body in said compartment to maintain the said packing member and said operating mechanisms continually lubricated, and a chamber outlet above said lubricant body.

4. The combination with a compressor, of an enclosed chamber in which said compressor is disposed, a vertically disposed actuating shaft and associated mechanisms for said compressor, an open-ended sleeve, partially defining an auxiliary compartment opening into said chamber at the lower end thereof, surrounding said shaft and mechanisms, a cover for said compartment, a packing member for said shaft near the top of said compartment, a yielding tight gland surrounding said shaft intermediate said cover and said packing member, said chamber being partially filled with a body of lubricant, said body of lubricant cooperating with the open end of said sleeve to form a liquid seal between the compressor mechanisms and the tight gland within said compartment.

5. The combination of a pressure chamber, a pump mechanism at the bottom of said chamber, an operating shaft for said pump mechanism extending from the top of said chamber, a tight gland sealing the exit of said shaft through said chamber, packing means comprising a sleeve forming a compartment around said shaft and pump mechanism and terminating a short distance above the bottom of said chamber, and a lubricating medium sealing the interior of said compartment from said chamber subjected in the latter to the pressure generated by the pump mechanism.

6. The combination with a compressor, of an enclosed chamber in which said compressor is disposed, a vertically disposed actuating shaft and associated mechanisms for said compressor, an open-ended sleeve, partially defining an auxiliary compartment opening into said chamber at the lower end thereof, surrounding said shaft, a cover for said compartment, a packing member for said shaft near the top of said compartment, a yielding tight gland surrounding said shaft intermediate said cover and said packing member, said chamber being partially filled with a body of lubricant, said body of lubricant cooperating and extending above the open end of said sleeve to form a liquid seal between the compressor mechanisms and the tight gland within said compartment, the body of lubricant covering also the compressor mechanisms.

HENRY E. ELROD.

CERTIFICATE OF CORRECTION.

Patent No. 2,016,082. October 1, 1935.

HENRY E. ELROD.

It is hereby certified that error appears in the printed specification of the above numbered patent requiring correction as follows: Page 3, second column, line 10, claim 5, strike out the words "packing means comprising" and insert the same after "chamber," in line 8; and line 30, claim 6, after "cooperating" insert the word with; and that the said Letters Patent should be read with these corrections therein that the same may conform to the record of the case in the Patent Office.

Signed and sealed this 5th day of November, A. D. 1935.

Leslie Frazer

(Seal) Acting Commissioner of Patents.